5-3810-295-20 P/990

TM 5-3810-295-20P

TECHNICAL MANUAL

ORGANIZATIONAL MAINTENANCE REPAIR PARTS

AND SPECIAL TOOLS LIST

CRANE, WHEEL MOUNTED: 20-TON AT 10-FOOT RADIUS, 2 ENGINES, DIESEL ENGINE DRIVEN, 4 x 4 AIR TRANSPORTABLE

FOR

HARNISCHFEGER CORP. MODEL M320RT (NSN 3810-00-275-1167)

This copy is a reprint which includes current pages from Changes 1

HEADQUARTERS, DEPARTMENT OF THE ARMY

DECEMBER 1978

0101.11:

READEX FICHE best copy available

TM 5-3810-295-20P
C1

CHANGE NO. 1

HEADQUARTERS
DEPARTMENT OF THE ARMY
WASHINGTON, D.C., *31 August 1984*

ORGANIZATIONAL MAINTENANCE REPAIR PARTS AND SPECIAL TOOLS LIST FOR CRANE, WHEEL MOUNTED: 20-TON AT 10-FOOT RADIUS, 2 ENGINES, DIESEL ENGINE DRIVEN, 4 x 4 AIR TRANSPORTABLE HARNISCHFEGER CORP. MODEL M320RT (NSN 3810-00-275-1167)

TM 5-3810-295-20P, 16 December 1978 is changed as follows:

1. Remove old pages and insert new pages as indicated below.
2. New or changed material is indicated by a vertical bar in the margin of the page.
3. Added or revised illustrations are indicated by a vertical bar adjacent to the illustration identification number.

Remove Pages	*Insert Pages*	*Remove Pages*	*Insert Pages*
i and ii	i and ii	274 and 275	274 and 275
4 and 5	4 and 5	288 and 289	288 and 289
10 and 11	10 and 11	294 and 295	294 and 295
16 through 19	16 through 19	302 and 303	302 and 303
32 and 33	32 and 33	316 and 317	316 and 317
36 and 37	36 and 37	330 and 331	330 and 331
40 through 47	40 through 47	336 and 337	336 and 337
56 through 59	56 through 59	346 and 347	346 and 347
64 and 65	64 and 65	350 and 351	350 and 351
68 through 71	68 through 71	362 and 363	362 and 363
74 and 75	74 and 75	366 and 367	366 and 367
82 and 83	82 and 83	386 and 387	386 and 387
94 and 95	94 and 95	394 and 395	394 and 395
102 through 105	102 through 105	398 and 399	398 and 399
112 and 113	112 and 113	402 through 407	402 through 407
148 and 149	148 and 149	426 and 427	426 and 427
152 and 153	152 and 153	452 and 453	452 and 453
172 and 173	172 and 173	456 and 457	456 and 457
176 and 177	176 and 177	476 and 477	476 and 477
180 and 181	180 and 181	482 and 483	482 and 483
190 and 191	190 and 191	492 and 493	492 and 493
226 and 227	226 and 227	510 through 523	510 through 523
234 and 235	234 and 235	526 through 565	526 through 565

4. File this change page in front of this publication for reference purposes.

By Order of the Secretary of the Army:

JOHN A. WICKHAM, JR.
General, United States Army
Chief of Staff

Official:

ROBERT M. JOYCE
Major General, United States Army
The Adjutant General

Distribution:

To be distributed in accordance with DA Form 12-25B, Organizational Maintenance requirements for Cranes: Wheel Mounted.

TECHNICAL MANUAL
No. 5-3810-295-20P

HEADQUARTERS,
DEPARTMENT OF THE ARMY
Washington, DC, *16 December 1978*

ORGANIZATIONAL MAINTENANCE REPAIR PARTS AND SPECIAL TOOLS LIST FOR

CRANE, WHEEL MOUNTED: 20-TON AT 10-FOOT RADIUS, 2 ENGINES, DIESEL ENGINE DRIVEN, 4 x 4 AIR TRANSPORTABLE HARNISCHFEGER CORP. MODEL M320RT (NSN 3810-00-275-1167)

REPORTING ERRORS AND RECOMMENDING IMPROVEMENTS

You can help improve this manual. If you find any mistakes or if you know of a way to improve the procedures, please let us know. Mail your letter, DA Form 2028 (Recommended Changes to Publications and Blank Forms) or DA Form 2028-2 located in the back of this manual direct to: Commander, US Army Tank-Automotive Command, ATTN: DRSTA-MB, Warren, MI 48090. A reply will be furnished to you.

		Page	Illustration Figure
SECTION I.	INTRODUCTION	i	
II.	REPAIR PARTS LIST	i	
PART I.	CRANE		
GROUP 01	Hook Block		1
	Block Assembly, Hook	1	1
02	Spreader Assembly		
	Spreader Assembly	3	2
03	Safeload Indicator Computer Set	5	7
04	Angle Indicator		
	Angle Indicator Assembly	7	8
05	Boom		
	Boom Assembly	9	9
	Backstop Assembly, Boom	13	10
	Gantry Assembly	15	11
06	Windshield Wiper		
	Wiper Assembly	17	12
07	Lights		
	Floodlights and Marker Lights	19	13
	Domelight	23	14
	Troublelight Assembly	25	15
08	Horn		
	Horn Assembly	27	16
09	Engine Compartment		
	Compartment Assembly, Engine, (sheet 1 of 2)	30	17
	Compartment Assembly, Engine (sheet 2 of 2)	31	17
10	Crane Cab		
	Cab Assembly	35	18
	Cab Assembly (sheet 1 of 2)	38	19
	Cab Assembly (sheet 2 of 2)	39	19
	Cab Assembly	43	20
	Cab Assembly	45	21
11	Crane Heater, Hoses and Ducts		
	Heater Hoses	49	22
	Heater Assembly and Ducts	51	23
12	Wiring Installation		
	Wiring Assembly (sheet 1 of 3)	55	24
	Wiring Assembly (sheet 2 of 3)	56	24
	Wiring Assembly (sheet 3 of 3)	57	24

*This manual supersedes TM 5-3810-295-20P, 16 November 1978.

		Page	Illustration Figure
13	Seat Assembly		
	Seat Assembly	61	25
14	Crane Engine Radiator		
	Radiator	63	26
15	Crane Exhaust System		
	Muffler and Pipes	65	27
16	Crane Engine Water Filter		
	Water Filter and Hose	67	28
18	Starting Aid		
	Starting Aid, Bracket and Tube	69	30
19	Air Cleaner		
	Cleaner Assembly	71	31
20	Crane Fuel Lines, Pump, Tank and Fittings		
	Engine Fuel Hoses	73	32
	Pump Assembly, Primer	77	33
	Crane Fuel Tank	79	34
21	Batteries		
	Batteries and Box	81	35
22	Crane Throttle and Radiator Shutter Control		
	Throttle Assembly	83	36
	Cables, Emergency Stop, Radiator Shutters and Engine Stop	85	37
23	Instrument Panel		
	Instrument Panel, Gages, and Switches	87	38
24	Crane Propeller Shaft and Clutch		
	Shaft, Propeller, Crane	89	39
	Clutch and Related Parts	91	40
26	Engine Electrical Group		
	Starter Assembly, Crane	93	42
	Generator Mounting	95	43
	Generator Assembly	97	44
27	Tachometer		
	Tachometer Assembly	99	45
28	Fuel Filter, Strainer and Pump		
	Filter Assembly, Fuel	101	46
	Strainer Assembly, Fuel	103	47
	Pump Assembly, Fuel	105	48
29	Blower Installation		
	Housing Assembly	107	49
	Blower Drive	109	52
30	Governor and Controls		
	Governor Controls	111	53
	Governor Housing	113	55
31	Engine Manifold		
	Manifold	115	57
32	Engine Lubrication System, Crane		
	Filter Assembly	117	58
	Breather and Oil Level Gage	119	60
	Oil Cooler and Connections	121	61
	Oil Pan, Inlet Screen and Pipe	123	62
33	Cooling System, Crane Engine		
	Fan, Pulley and Hub	125	63
	Thermostat, housing and Related Parts	127	64
	Water Pump Idler	129	65
	Water Pump Assembly	131	66
34	Engine, Diesel, and Related Parts		
	Cover, Rocker Arm	133	67
	Injector levers and Tubes	135	68
	Lifting Brackets	137	71
	Cylinder Head and Exhaust Valves	139	72
	Crankcase and Related Parts	141	79
35	Crane Lock		
	Lock Assembly, Crane	143	80
36	Catwalk Assembly		
	Catwalk Assembly, crane	145	81
37	Hydraulic System, Crane		
	Reservoir, Swivel Joint, Tubes and Fittings	147	82
	Swivel Joint	151	83
	Cylinder Assembly, Hydraulic	153	84

		Page	Illustration Figure
38	Controls and Levers, Crane		
	Control Assembly	155	85
	Cylinder Assembly, Control	159	86
	Stand Assembly, Swing Brake Control	163	87
	Lock Assembly, Drum and Pawl	167	88
39	Gear and Chain Housing		
	Shaft Assemblies, Chains and Chain Housing	171	89
40	Clutches, Shafts and Brake Assemblies		
	Clutch Assembly, Hoist	173	90
	Brake Assembly, Hoist and Digging	175	91
	Shaft Assembly, Hoist	179	92
	Clutch Assembly, Digging	181	93
	Shaft Assembly, Digging	183	94
	Clutch Assembly, Left Swing	185	95
	Clutch Assemblies, Reversing and Right Swing	187	96
	Brake Assembly, Swing	189	97
	Shaft Assembly, Reversing	193	98
	Shaft Assembly, Horizontal Swing	195	99
	Lock Assembly, Swing	197	101
41	Boom Hoist		
	Clutch Assembly, Boom Hoist	199	102
	Brake Assembly, Boom Hoist	201	103
	Shaft Assembly, Boom Hoist	203	104
42	Revolving Frame		
	Frame Assembly, Revolving	205	107
	Circle Assembly, Roller	207	108
	Hook Rollers, Instruction Plates and Tool Box	209	109
PART II.	CARRIER		
43	Wiring System, Carrier		
	Wiring Assemblies, Harnesses and Related Parts (sheet 1 of 5)	213	111
	Wiring Assemblies, Harnesses and Related Parts (sheet 2 of 5)	214	111
	Wiring Assemblies, Harnesses and Related Parts (sheet 3 of 5)	215	111
	Wiring Assemblies, Harnesses and Related Parts (sheet 4 of 5)	216	111
	Wiring Assemblies, Harnesses and Related Parts (sheet 5 of 5)	217	111
	Battery and Battery Case Assembly	223	112
44	Right Assemblies and Mirror Assembly		
	Black-out, Turn Signal and Clearance Lights	225	113
	Light Assembly, Marker	229	114
	Headlight Assembly	231	115
	Light, Combination, Stop and Tail	233	116
	Mirror Assembly	235	117
45	Utility Blade and Hydraulic Cylinder Assembly		
	Blade, Utility	237	118
46	Outriggers and Related Parts		
	Outriggers, Front	239	120
	Outrigger, Left Rear	241	121
	Outrigger, Right Rear	243	122
	Float Pad Assembly, Outrigger	245	124
47	Steering Assembly, Carrier		
	Button Assembly, Horn	247	125
	Steering Assembly, Front	249	126
	Gear Box Assembly, Front	251	127
	Gear Box Assembly, Stub	253	128
	Valve Assembly, Steering Control	255	129
48	Windshield Wiper, Pressure Indicator, Horn, Valves, Lines and Fittings		
	Wiper Assembly, Windshield	257	131
	Horn, Lines and Fittings	259	132
	Indicator, Air Pressure	263	133
	Valve Assembly, Brake	265	134
49	Valve Assemblies, Reservoir Exhaust Hoses and Tube Assemblies		
	Hose and Tube Assemblies Reservoir Exhaust	267	136
	Valve Assembly, Drain	269	137
	Valve, Park Release Control	271	138
50	Governor, Evaporator, Valves, Hose and Tube Assemblies		
	Hose and Tube Assemblies, Compressor	273	140
	Evaporator Assembly, Alcohol	275	142
	Valve, Check, Alcohol Evaporator	277	143
	Valve, Check, Air Reservoir	279	144

		Page	Illustration Figure
51	Air Reservoir, Tube Assemblies		
	Air Reservoir and Drain Tube Assemblies	281	145
	Valve Assembly, Drain	283	146
52	Air Brake Tube and Valve Assembly		
	Tube Assemblies, Air Brake (sheet 1 of 2)	285	147
	Tube Assemblies, Air Brake (sheet 2 of 2)	286	147
	Valve Assembly, Treadle	289	148
	Couplings, Hose and Tube (sheet 1 of 2)	292	149
	Couplings, Hose and Tube (sheet 2 of 2)	293	149
	Valve Assembly, Safety	297	150
	Valve Assembly, Pressure	299	151
53	Brake Valve, Chamber, Hose		
	Hose and Tube Assemblies, Front Brake	301	152
	Valve Assembly, Control; Three-Way	305	153
	Valve Assembly, Control; Push-Pull	307	154
	Chamber Assembly, Air Brake	309	155
	Hose and Tube Assemblies, Rear Brake	311	156
	Valve Assembly, Relay	315	157
54	Hydraulic Valve, Hose and Tube Assemblies		
	Hose and Tube Assemblies (sheet 1 of 2)	317	158
	Hose and Tube Assemblies (sheet 2 of 2)	318	158
	Hose and Tube Assemblies	323	160
	Valve Assembly, Flow Control	327	161
55	Hydraulic Valve, Hose and Tube Assemblies, Steering		
	Hose and Tube Assemblies, Steering	329	163
	Valve, Double Solenoid	333	165
	Valve Assembly, Check-Relief	335	166
56	Hydraulic Cylinder, Valves, Hose and Tube Assemblies, Dozer		
	Hose and Tube Assemblies, Dozer Cylinder	337	168
	Valve Assembly, Flow-Divider	341	169
	Valve, Dozer Control	343	170
	Hose and Tube Assemblies, Flow Control	345	171
	Valve, Check	349	172
	Valve Assembly, Check; Pilot Operated	351	173
57	Hydraulic Components		
	Hose and Tube Assemblies, Steering (sheet 1 of 2)	353	174
	Hose and Tube Assemblies, Steering (sheet 2 of 2)	354	174
	Valve Assembly, Control	359	175
	Hose and Tube Assemblies, Hydraulic Pump	361	177
	Hose and Tube Assemblies, Hydraulic Pump	365	178
	Valve Assembly, Relief	369	179
	Valve Assembly, Control; Fan Drive	371	180
	Valve Assembly, Check; Right Angle	373	181
58	Torque Converter and Transmission Hose and Tube Assemblies		
	Hose and Tube Assemblies, Torque Converter and Transmission (sheet 1 of 2)	375	182
	Torque Converter and Transmission (sheet 2 of 2)	376	182
	Filter and Hose Assemblies	385	184
	Starting Assembly, Quick	387	185
	Tank Assembly, Hydraulic	389	186
	Filter Assembly, Hydraulic Oil	391	187
	Filter Assembly, Hydraulic Oil	393	188
59	Cooling System Engine		
	Radiator and Fan Assembly	395	189
	Heat Exchanger and Related Parts	397	191
60	Fuel System		
	Hose and Tube Assemblies Fuel	401	192
	Fuel Tank Assembly and Mounting Parts	403	193
61	Air Cleaner		
	Air Cleaner Assembly and Related Parts	405	194
62	Exhaust System		
	Muffler and Mounting Parts	407	195
63	Propeller Shafts		
	Shaft Assembly, Propeller, Converter to Transmission	409	196
	Shaft Assembly, Propeller, Transmission to Rear Axle	411	197
	Shaft Assembly, Propeller, Transmission to Front Axle	413	198

		Page	Illustration Figure
64	Torque Converter and Related Parts		
	Transmitters, Switches and Tube Assemblies	415	199
	Converter Assembly, Torque (sheet 1 of 2)	418	200
	Converter Assembly, Torque (sheet 2 of 2)	419	200
66	Transmission Assembly, Mounting and Connections		
	Mounts, Transmission and Connections	421	206
	Transmission Assembly, Automatic	423	207
67	Engine Electrical Components		
	Alternator, Battery Charging	425	219
68	Engine		
	Engine and Mountings	427	220
	Cooler, Oil	429	221
	Plates, Water Header	431	223
	Thermostat and Housing	433	224
	Pump Assembly, Water	437	228
	Valve, Hoses and Tubes, Fuel	439	229
	Manifold, Intake	441	230
	Cover Cylinder Head	443	236
	Head Assembly	445	240
	Pan, Oil	447	243
	Housing, Gear	449	244
	Corrosion Resistor Assembly	451	250
	Filter Assembly	453	251
	Filter Assembly	455	252
	Dipstick, Oil Level	457	253
69	Steering Assembly		
	Hose Assemblies, Hydraulic	459	254
	Cylinder Assembly, Centering	463	255
	Cylinder Assembly, Steering	465	256
	Cylinder Assembly, Steering	467	257
70	Front Axles		
	Axle Assembly, Front	469	258
	Axle Assembly, Rear	471	260
	Cradle, Front Axle	473	263
71	Controls		
	Throttle Assembly, Control	475	267
72	Cab Assembly and Related Parts		
	Operator's Cab Assembly (sheet 1 of 2)	479	268
	Operator's Cab Assembly (sheet 2 of 2)	480	268
	Heater Assembly, Cab	485	269
	Seat Assembly	487	270
	Light Assembly, Trouble	491	271
	Mirror Assembly, Crane Cab	493	272
	Board Assembly, Instrument Panel	495	273
	Lamp Assembly, Instrument Panel	499	274
	Lamp Assembly, Instrument Panel	501	275
	Cab Assembly, Carrier	503	276
73	Frame, Carrier		
	Frame and Related Parts	509	277
	Hook Assembly, Pintle	511	278
74	Bulk Material		
SECTION III.	Special Tools List (Not Applicable)		
IV.	**National Stock Number and Part Number Index**	513	

SECTION I
INTRODUCTION

1. Scope

This manual lists repair parts, special tools, test, measurement, and diagnostic equipment (TMDE), and other support equipment required for operation and performance of organizational maintenance of the Rough Terrain Crane. It authorized the requisitioning and issue of spares and repair parts as indicated by the source and maintenance codes.

2. General

a. Section II – Repair Parts List. A list of repair parts authorized for use in the performance of maintenance. The list also includes parts which must be removed for replacement of the authorized parts. Parts lists are composed of functional groups in ascending numerical sequence, with the parts in each group listed in figure and item number sequence. Bulk materials are listed in NSN sequence as the last group in section II.

b. Section III – Special Tools List. Not Applicable.

c. Section IV. National Stock Number and Part Number Index. A list, in National item identification number (NIIN) sequence, of all National stock numbers (NSN) appearing in the listings, followed by a list in alphameric sequence of all part numbers appearing in the listings. National stock numbers and part numbers are cross-referenced to each illustration figure and item number appearance. This index is followed by a cross-reference list of reference designators to figure and item numbers.

3. Explanation of Columns

The following provides an explanation of columns found in the tabular listings:

a. Illustration. This column is divided as follows:

(1) *Figure number.* Indicates the figure number of the illustration in which the item is shown.

(2) *Item number.* The number used to identify each item called out in the illustration.

b. Source, Maintenance, and Recoverability Codes (SMR).

(1) *Source code.* Source codes are assigned to support items to indicate the manner of acquiring support items for maintenance, repair, or overhaul of end items. Source codes are entered in the first and second positions of the Uniform SMR Code format as follows:

Code	*Definition*
PA	Item procured and stocked for anticipated or known usage.
PB	Item procured and stocked for insurance purpose because essentiality dictates that a minimum quantity be available in the supply systems.
PC	Item procured and stocked and which otherwise would be coded PA except that it is deteriorative in nature.
PD	Support Item, excluding support equipment, procured for initial issue or outfitting and stocked only for subsequent or additional initial issues or outfittings. Not subject to automatic replenishment.
PE	Support equipment procured and stocked for initial issue or outfitting to specified maintenance repair activities.
PF	Support equipment which will not be stocked but which will be centrally procured on demand.
PG	Item procured and stocked to provide for sustained support for the life of the equipment. It is applied to an item peculiar to the equipment which, because of probable discontinuance or shutdown of production facilities, would prove uneconomical to reproduce at a later time.
KD	An item of a depot overhaul/repair kit and not purchased separately. Depot kit defined as a kit that provides items required at the time of overhaul or repair.
KF	An item of a maintenance kit and not purchased separately. Maintenance kit defined as a kit that provides an item that can be replaced at organizational or intermediate levels of maintenance.
KB	Item included in both a depot overhaul/repair kit and a maintenance kit.
MO	Item to be manufactured or fabricated at organizational level.
MF	Item to be manufactured or fabricated at the direct support maintenance level.
MH	Item to be manufactured or fabricated at the general support maintenance level.
MD	Item to be manufactured or fabricated at the depot maintenance level.
AO	Item to be assembled at organizational level.
AF	Item to be assembled at direct support maintenance level.
AH	Item to be assembled at general support maintenance level.
AD	Item to be assembled at depot maintenance level.
XA	Item is not procured or stocked because the requirements for the item will result in the replacement of the next higher assembly.
XB	Item is not procured or stocked. If not available through salvage, requisition.
XC	Installation drawings, diagram, instruction sheet, field service drawing, that is identified by manufacturer's part number.
XD	A support item that is not stocked. When required, item will be procured through normal supply channels.

NOTE

Cannibalization or salvage may be used as a source of supply for any items source coded above except those coded XA or XD.

(2) *Maintenance code.* Maintenance codes are assigned to indicate the levels of maintenance authorized to use and repair support items. The maintenance codes are entered in the third and fourth positions of the Uniform SMR code format as follows:

(a) The maintenance code entered in the third position will indicate the lowest maintenance level authorized to remove, replace, and use the support item. The maintenance code entered in the third position will indicate one of the following levels of maintenance:

Code	*Application/Explanation*
C	Crew or operator maintenance performed within organizational maintenance.
O	Support item is removed, replaced, used at the organizational level.
F	Support item is removed, replaced, used at the direct support level.
H	Support item is removed, replaced, used at the general support level.
D	Support items that are removed, replaced, used at depot, mobile depot, specialized repair activity only.

(b) The maintenance code entered in the fourth position indicated whether the item is to be repaired and identifies the lowest maintenance level with the capability to perform complete repair (i.e., all authorized maintenance functions). The position will contain one of the following maintenance codes:

Code	*Application/Explanation*
O	The lowest maintenance level capable of complete repair of the support item is the organizational level.
F	The lowest maintenance level capable of complete repair of the support item is the direct support level.
H	The lowest maintenance level capable of complete repair of the support item is the general support level.
D	The lowest maintenance level capable of complete repair of the support item is the depot level.
L	Repair restricted to designated specialized repair activity.
Z	Nonreparable. No repair is authorized.
B	No repair is authorized. The item may be reconditioned by adjusting, lubricating, etc., at the user level. No parts or special tools are procured for the maintenance of this item.

(3) *Recoverability code.* Recoverability codes are assigned to support items to indicate the disposition action on unserviceable items. The recoverability code is entered in the fifth position of the Uniform SMR Code format as follows:

Code	*Definition*
Z	Nonreparable item. When unserviceable, condemn and dispose at the level indicated in position 3.
O	Reparable item. When uneconomically reparable, condemn and dispose at the direct support level.
F	Reparable item. When uneconomically reparable condemn and dispose at the direct support level.
H	Reparable item. When uneconomically reparable, condemn and dispose at the general support level.
D	Reparable item. When beyond lower level repair capability, return to depot. Condemnation and disposal not authorized below depot level.
L	Reparable item. Repair, condemnation, and disposal not authorized below depot/specialized repair activity level.
A	Item requires special handling or condemnation procedures because of specific reasons (i.e., precious metal content, high dollar value, critical material or hazardous material). Refer to appropriate manuals/directives for specific instructions.

c. National Stock Number. Indicates the National stock number assigned to the item and will be used for requisitioning purposes.

d. Part Number. Indicates the primary number used by the manufacturer which controls the design and characteristics of the item by means of its engineering drawings, specifications, standards, and inspection requirements to identify an item or range of items.

NOTE

When a stock number item is requisitioned, the repair part received may have a different part number than the part being replaced.

e. Federal Supply Code for Manufacturer (FSCM). The FSCM is a 5-digit numeric code listed in SB 708-42 which is used to identify the manufacturer, distributor, or Government agency, etc.

f. Description. Indicates the Federal item name and, if required, a minimum description to identify the item. Items that are included in kits and sets are listed below the name of the kit or set with the quantity of each item in the kit or set indicated in the quantity incorporated in unit column. When the part to be used differs between serial numbers of the same model, the effective serial numbers are shown as the last line of the description. In the Special Tools List, the initial basis of issue (BOI) appears as the last line in the entry for each special tool, TMDE, and support equipment. When density of equipments supported exceeds density spread indicated in the basis of issue, the total authorization is increased accordingly.

g. Unit of Measure (U/M). Indicates the standard of the basic quantity of the listed item as used in performing the actual maintenance function. This measure is expressed by a two-character alphabetical abbreviation (e.g., ea, in, pr, etc.). When the unit of measure differs from the unit of issue, the lowest unit of issue that will satisfy the required units of measure will be requisitioned.

h. Quantity Incorporated in Unit. Indicates the

quantity of the item in the breakout shown on the illustration figure, which is prepared for a functional group, subfunctional group, or an assembly. A "V" appearing in this column in lieu of a quantity indicates no specific quantity is applicable, (e.g. shims, spacers, etc.).

4. Special Information

a. Detailed manufacturing instructions for items source coded to be manufactured or fabricated are found in TM 5-3810-295-34. Bulk materials required to manufacture items are listed in the Bulk Materials Group of this manual.

b. Detailed assembly instructions for items source coded to be assembled are found in TM 5-3810-295-34. Assembly components are listed immediately following the item to be assembled.

c. Repair parts kits and gasket sets appear as the last entries in the repair parts listing for the figure in which its parts are listed as repair parts or are listed at the end of the repair parts listing for the last figure containing parts of the kit.

d. The following publications pertain to the crane and its components:

TM 5-3810-295-12	Operator's and Organizational Maintenance Manual
LO 5-3810-295-12-1, -2 and -3	Lubrication Order

The illustrations in this manual are identical to those published in TM 5-3810-295-34P. Only those parts assigned the third position SMR maintenance code "C" or "O" are listed in the tabular listing; therefore there may be a break in the item number sequence. Only illustrations containing organizational authorized items appear in this manual.

5. How to Locate Repair Parts

a. When National stock number or part number is Unknown.

(1) *First.* Using the table of contents, determine the functional group within which the repair part belongs. This is necessary since illustrations are prepared for functional groups, and listings are divided into the same groups.

(2) *Second.* Find the illustration covering the functional group to which the repair part belongs.

(3) *Third.* Identify the repair part on the illustration and note the illustration figure and item number of the repair part.

(4) *Fourth.* Using the Repair Parts Listing, find the figure and item number noted on the illustration.

b. When National stock number or part number is known.

(1) *First.* Using the Index of National Stock Numbers and Part Numbers, find the pertinent National stock number or part number. This index is in ascending NIIN sequence followed by a list of part numbers in ascending alphanumeric sequence, cross-referenced to the illustration figure number and item number.

(2) *Second.* After finding the figure and item number, locate the figure and item number in the repair parts list.

6. Abbreviations

DEG .... Degree
DIA .... Diameter
FT .... Feet
GA .... Gauge
GR .... Grade
HD .... Head
HEX .... Hexagon
HEX HD .... Hexagon head
ID .... Inside diameter
IN .... Inch
LG .... Long
MFD .... Manufactured
MIL .... Military
MTG .... Mounting
NO .... Number
NOM .... Nominal
NPT .... National Pipe Thread
NPTF .... National Pipe Thread Fine
NSN .... National Stock Number
OD .... Outside diameter
P/N .... Part Number
PT .... Point
RPM .... Revolutions per minute
SPEC .... Specification
THK .... Thick
V .... As required
W/ .... With
X .... By

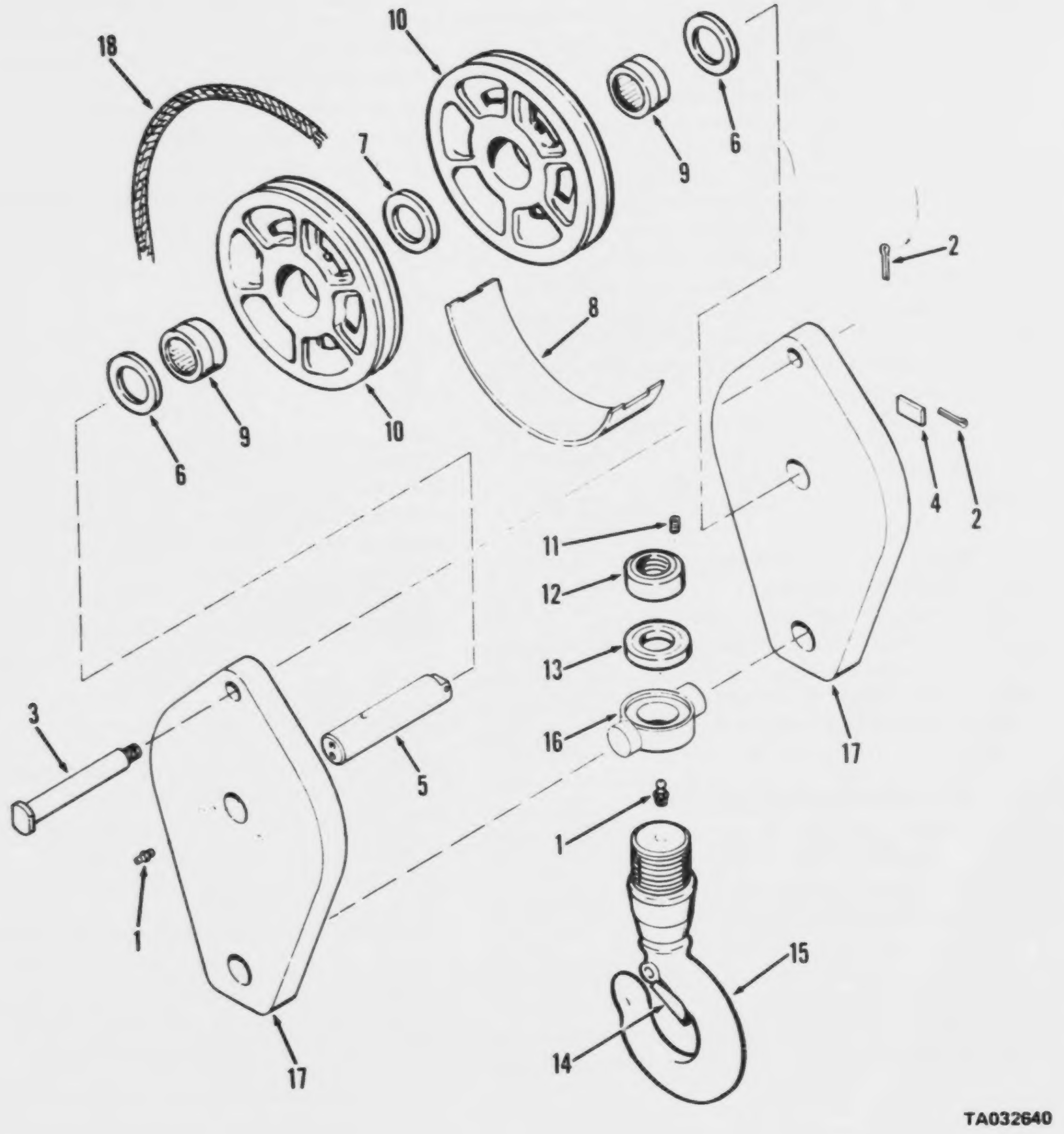

Figure 1. Block assembly, hook

(1) ILLUSTRATION (a) FIG NO.	(b) ITEM NO.	(2) SMR CODE	(3) FEDERAL STOCK NUMBER	(4) PART NUMBER	(5) FSCM	(6) DESCRIPTION USABLE ON CODE	(7) U/M	(8) QTY INC IN UNIT
						PART I CRAKE		
						FUNCTIONAL GROUP 01 HOOK BLOCK		
1		XAOZZ		214F20USPH	96509	HOOK BLOCK ASSEMBLY CRANE	EA	1
1	1	XDOZZ		508	96509	.FITTING,LUBRICATION HOOK AND PULLEY	EA	3
1	2	PAOZZ	5315-00-151-9052	512	96509	..PIN,COTTER 1/4 COTTER PIN	EA	2
1	3	AOZZ		1425	96509	.PIN BECKET HOOK BLOCK	EA	1
1	4	XBOZZ		306	96509	.RETAINER PIN PULLEY	EA	1
1	5	XAOZZ		688	96509	.SHAFT PULLEY HOOK BLOCK	FA	1
1	6	XAOZZ		552A	96509	.SPACER BRONZE PULLEY	EA	2
1	7	XAOZZ		542A	96509	SPACER BRONZE PULLEY	EA	1
1	8	XAOZZ		563	96509	.GUARD PULLEY HOOK BLOCK	EA	1
1	9	XAOZZ		687	96509	.BEARING,ROLLER PULLEY	EA	2
1	10	XAOZZ		566-5	96509	.PULLEY,GROOVE HOOK BLOCK	EA	2
1	11	XBOZZ	5305-00-724-5885	958	96509	.SETSCREW TRUNNION NUT	EA	2
1	12	XAOZZ		575	96509	.NUT TRUNNION HOOK	EA	1
1	13	XAOZZ		572	96509	.BEARING,THRUST HOOK	EA	1
1	14	XAOZZ		319C20	96509	.LATCH HOOK HOOK BLOCK	EA	1
1	15	XAOZZ		5733-2	96509	.HOOK LIFTING CRANE	FA	1
1	16	XAOZZ		571	96509	.TRUNNION HOOK CRANE	EA	1
1	17	XBOZZ		1426	96509	.PLATE SIDE HOOK BLOCK	EA	2
1	18	PAOZZ	4010-00-641-3713	RRW410 TYP-1 CL2	81348	WIRE,ROPE,SHEAVE 5-8 DIA RIGHT LAY 400 FT LG	FA	1

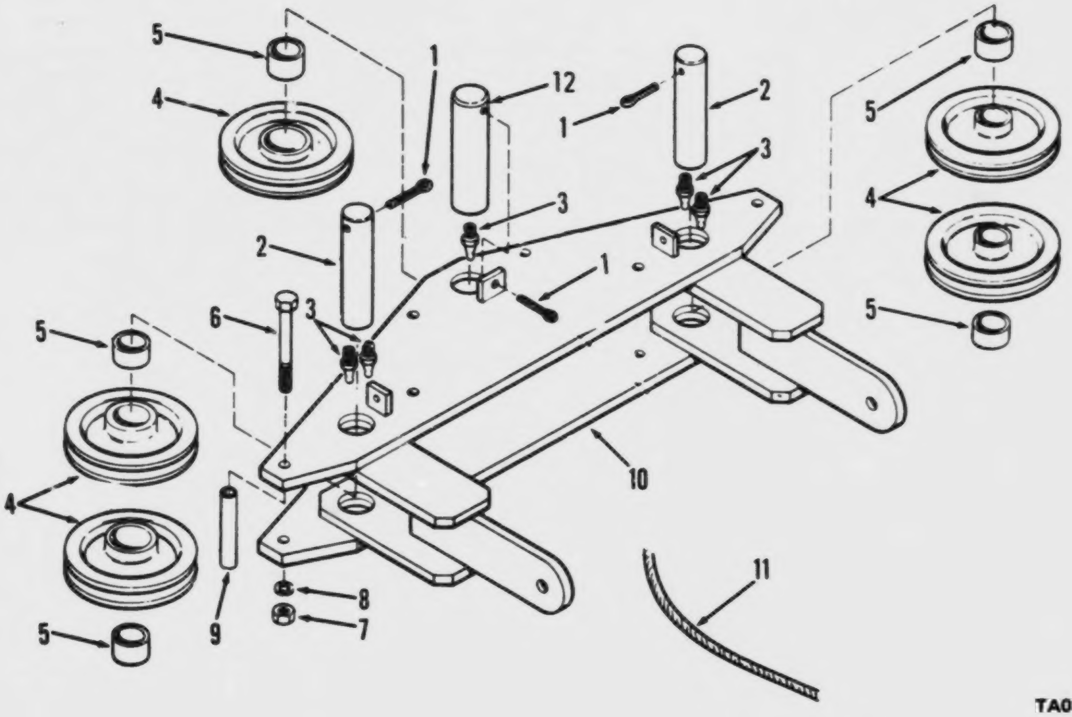

Figure 2. Spreader assembly

(1) ILLUSTRATION (a) FIG NO.	(b) ITEM NO.	(2) SMR CODE	(3) FEDERAL STOCK NUMBER	(4) PART NUMBER	(5) FSCM	(6) DESCRIPTION USABLE ON CODE	(7) U/M	(8) QTY INC IN UNIT
						FUNCTIONAL GROUP 02 SPREADER ASSEMBLY		
2		XDOZZ		2100N200-2	27315	SPREADER ASSEMBLY WIRE ROPE.................................	EA	1
2	1	XBOZZ		MS24665-904	96906	.PIN,COTTER SHEAVE PIN.................................	EA	3
2	2	PAOZZ	3815-00-416-7393	219P94	27315	.PIN,STRAIGHT PULLEY.................................	EA	3
2	3	PAOZZ	4730-00-050-4208	MS15003-1	96906	.FITTING,LUBRICATION 1/8 NPT.................................	EA	5
2	5	XBOZZ		CW3-44	27315	.BEARING SLEEVE PULLEY.................................	EA	1
2	6	PAOZZ	5305-00-071-1782	MS90725-129	96906	.SCREW,CAP,HEXAGON 1/2-13X6 PULLEY.................................	EA	6
2	7	PAOZZ	5310-00-768-0318	MS51967-14	96906	.NUT,PLAIN,HEXAGON 1/2-13.................................	EA	6
2	8	PAOZZ	5310-00-584-5272	MS35338-48	96906	.WASHER,LOCK 1/2 PULLEY.................................	EA	6
2	9	XDOZZ		18P9310156	27315	.SPACER FRAME PULLEY SCREW.................................	EA	6
2	10	XDOZZ		229N31	27315	.FRAME SPREADER SPREADER.................................	EA	1
2	11	PAOZZ	4010-00-961-9780	7699767-1 C TYP-1	81348	WIRE,ROPE 7-16 DIA RIGHT LAY 245 FT LG.................................	RL	1
2	12	PAOZZ	5315-00-222-1587	219P93	27315	.PIN,STRAIGHT,HEADLE PULLEY.................................	EA	1
								1

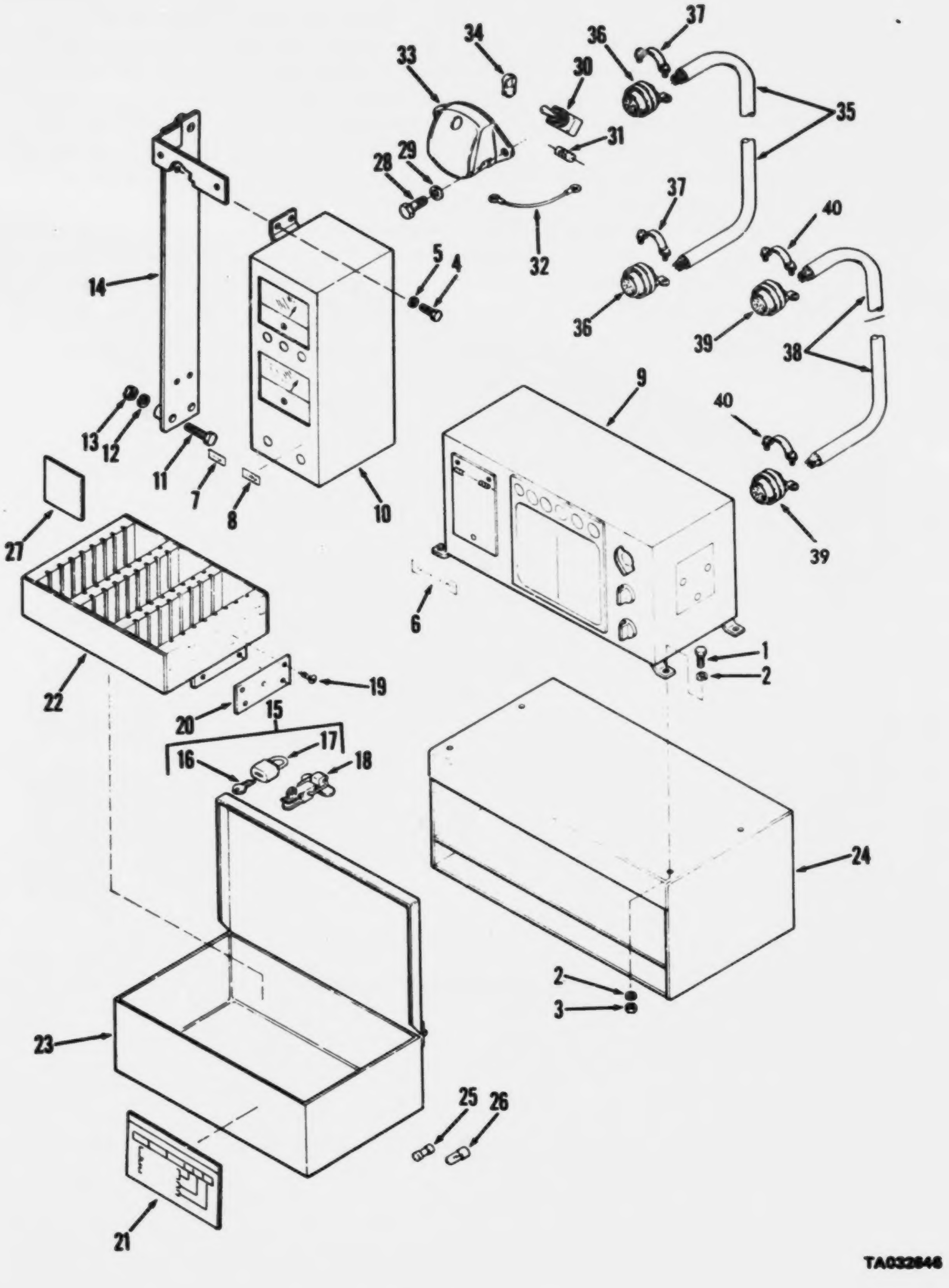

Figure 7. Computer set

(1) ILLUSTRATION (a) FIG NO.	(b) ITEM NO.	(2) SMR CODE	(3) NATIONAL STOCK NUMBER	(4) PART NUMBER	(5) FSCM	(6) DESCRIPTION USABLE ON CODE	(7) U/M	(8) QTY INC IN UNIT
						FUNCTIONAL GROUP 03 SAFELOAD INDICATOR		
7	1	PAOZZ	5305-00-225-9081	MS90725-36	96906	.SCREW,CAP,HEXAGON 5-8-16X1-1-4 CONSOLE	EA	4
7	6	XDOZZ		32Z1469	27315	..DECAL CONSOLE FLOATS SPARE TIRES	EA	1
7	7	XDOZZ		32Z1470D1	27315	..DECAL INDICATOR FLOATS	EA	1
7	8	XDOZZ		32Z1470D2	27315	..DECAL INDICATOR TIRES	EA	1
7	17	XAOZZ		500CA	38797	...LOCK DOOR CRANE CAB	EA	1
7	21	XBOZZ		32Z1318	27315	..PLATE,INSTRUCTION RESISTOR BOX	EA	1
7	22	XDOZZ		14N1796	27315	..COMPARTMENT STORAGE STORAGE CARDS	EA	1
7	23	XBOZZ		1-14J1059	27315	..BOX RESISTOR STORAGE	EA	1
7	24	XDOZZ		16N1592	27315	.BRACKET BOX STORAGE	EA	1
7	25	PAOZZ	5920-00-557-5057	AGC6	71400	.FUSE,CARTRIDGE 6 AMP	EA	3
7	26	PAOZZ		24PSB	80368	.LAMP INCANDESCENT LAMP 24 VOLT INDICATOR	EA	3
7	27	PAOZZ		80Q65D1	27315	.CARD PROGRAM SAFE LOAD	EA	1
7	27	PAOZZ		80Q65D2	27315	.CARD PROGRAM SAFE LOAD	EA	1
7	27	PAOZZ		80Q65D3	27315	.CARD PROGRAM SAFE LOAD	EA	1
7	27	PAOZZ		80Q65D4	27315	.CARD PROGRAM SAFE LOAD	EA	1
7	27	PAOZZ		80Q65D5	27315	.CARD PROGRAM SAFE LOAD	EA	1
7	27	PAOZZ		80Q65D6	27315	.CARD PROGRAM SAFE LOAD	EA	1
7	27	PAOZZ		80Q65D7	27315	.CARD PROGRAM SAFE LOAD	EA	1
7	27	PAOZZ		80Q65D8	27315	.CARD PROGRAM SAFE LOAD	EA	1
7	34	PAOZZ	6240-00-155-7848	303	24455	...LAMP INCANDESCENT:CONSOLE	EA	1
7	37	XDOZZ		10-350349-203	77820	..CLAMP CABLE ELECTRICAL	EA	2

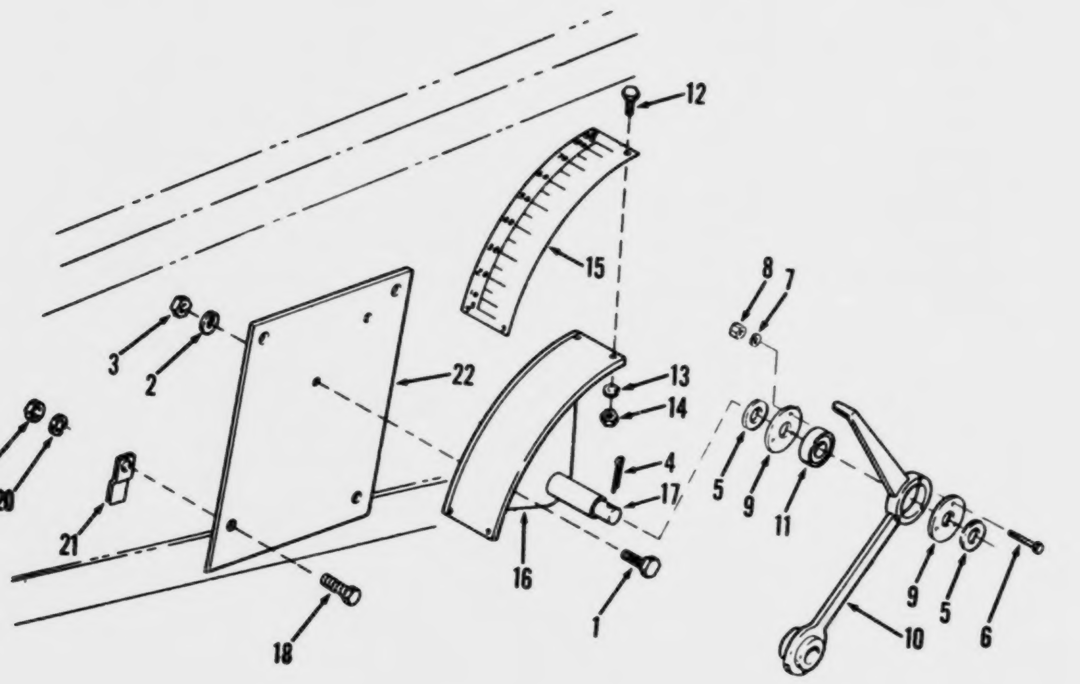

Figure 8. Angle indicator assembly

(1) ILLUSTRATION (a) FIG NO.	(b) ITEM NO.	(2) SMR CODE	(3) NATIONAL STOCK NUMBER	(4) PART NUMBER	(5) FSCM	(6) DESCRIPTION USABLE ON CODE	(7) U/M	(8) QTY INC IN UNIT
						FUNCTIONAL GROUP 04 ANGLE INDICATOR		
8		XB000		2100P56-7	27315	ANGLE IND ASSEMBLY CRANE.....	EA	1
8	1	PAOZZ	5305-00-225-3839	MS90725-9	96906	.SCREW,CAP,HEXAGON 1/4-20X1 PLATE MOUNTING.....	EA	2
8	2	PAOZZ	5310-00-582-5965	MS35338-44	96906	.WASHER,LOCK 1/4 PLATE MOUNTING.....	EA	2
8	3	PAOZZ	5310-00-761-6882	MS51967-2	96906	.NUT,PLAIN,HEXAGON 1/2-20 PLATE MOUNTING.....	EA	2
8		XBOZZ		100N2480F1	27315	.INDICATOR ANGLE BOOM ANGLE.....	EA	1
8	4	PAOZZ	5315-00-197-9538	MS24665-349	96906	..PIN,COTTER 1/8X1/2.....	EA	1
8	5	XDOZZ		18T11079	27315	..WASHER,FLAT 1/2 SHAFT.....	EA	1
8	6	XBOZZ		AN515-8-12	88044	..SCREW,MACHINE NO. 5-40X1/2 DIAL MOUNTING.....	EA	3
8	7	PAOZZ	5310-00-045-3299	MS35338-42	96906	..WASHER,LOCK NO.6.....	EA	3
8	9	PAOZZ	5310-00-934-9759	MS35649-284	96906	..NUT,PLAIN,HEXAGON NO.5-40 DIAL MOUNTING.....	EA	3
8	9	XDOZZ		14T1610	27315	..COVER LEVER INDICATOR.....	EA	2
8	10	XBOZZ		50P2F1	27315	..LEVER INDICATOR INDICATOR.....	EA	1
8	11	XDOZZ		Z99036	43336	...BEARING BALL LEVER.....	EA	1
8	12	PAOZZ	5305-00-958-4354	MS35207-230	96906	..SCREW,MACHINE NO.5-40X1/2 DIAL MOUNTING.....	EA	1
8	13	PAOZZ	5310-00-045-4007	MS35338-41	96906	..WASHER,LOCK NO.6 DIAL MOUNTING.....	EA	1
8	14	PAOZZ	5310-00-266-0517	AN340C5	88044	..NUT,PLAIN,HEXAGON NO.5-40 DIAL MOUNTING.....	EA	1
8	15	XBOZZ		32Z1027	27315	..DIAL INDICATOR ANGLE INDICATOR.....	EA	1
8	16	XBOZZ		18P4038	27315	..PLATE INDICATOR INDICATOR.....	EA	1
8	17	XC		19T5483	27315	..PIN, SHOULDER LEVER MOUNTING.....	EA	1
8	19	PAOZZ	5305-00-782-9495	MS90725-111	96906	..SCREW,CAP,HEXAGON 1/2-13X1-1/4 PLATE.....	EA	4
8	19	PAOZZ	5310-00-768-0318	MS51967-14	96906	..NUT,PLAIN,HEXAGON 1/2-13X1-1/4 PLATE.....	EA	4
8	20	PAOZZ	5310-00-637-9541	MS35338-46	96906	..WASHER,LOCK 1/2 PLATE MOUNTING.....	EA	4
8	21	XBOZZ		216T626	27315	..SUPPORT PLATE PLATE.....	EA	4
8	22	XBOZZ		218T597	27315	..PLATE MOUNTING MOUNTING.....	EA	1

AMC FORM 1779, 1 OCT 73 (REPLACES AMC TEST FORMS 1753 AND 1754, 6 APR 70, WHICH WILL BE USED UNTIL 1 JUL 74)

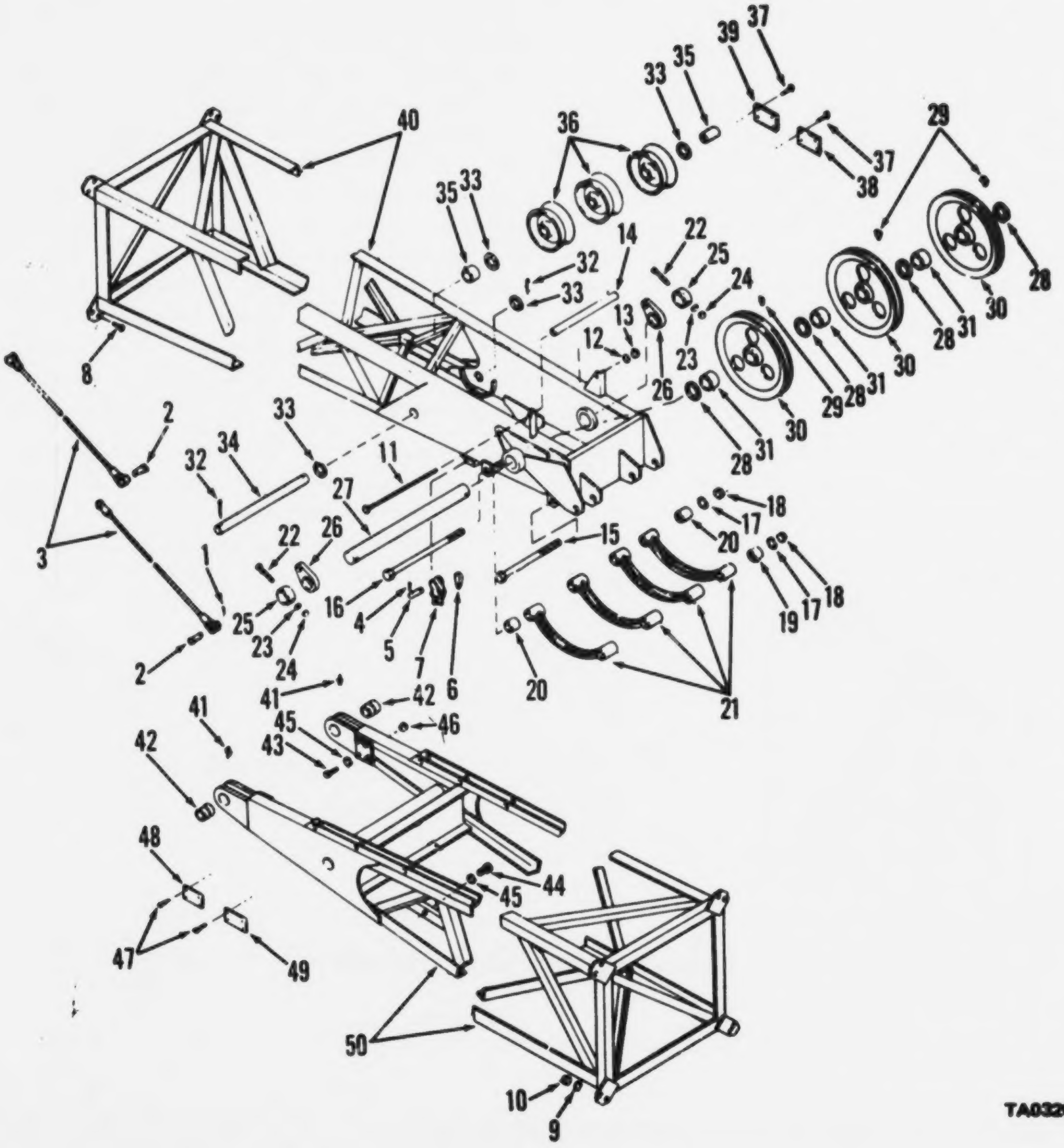

TA032848

Figure 9. Boom assembly

(1) ILLUSTRATION (a) FIG NO.	(b) ITEM NO.	(2) SMR CODE	(3) NATIONAL STOCK NUMBER	(4) PART NUMBER	(5) FSCM	(6) DESCRIPTION USABLE ON CODE	(7) U/M	(8) QTY INC IN UNIT
						FUNCTIONAL GROUP 05 BOOM		
9		PHODD	3815-00-541-9839	13217E6260	97403	BOOM,CRANE CRANE 30 FOOT....................................	EA	1
9	1	PAOZZ	5315-00-925-4813	MS24665-767	96906	.PIN,COTTER 3/8X2-1/2 SOCKET................................	EA	4
9	2	XDOZZ		219P101	27315	.PIN HEADED SOCKET..	EA	4
9	3	PBOZZ	4010-00-220-5101	107C6-2042	97403	.WIRE ROPE ASSEMBLY 15 FEET MATCHED SET.....................	EA	2
9		XBOZZ		908P39F40	27315	.SOCKET ASSEMBLY UPPER BOOM SECTION.........................	EA	1
9	4	PAOZZ	5315-00-203-7273	MS24665-625	96906	..PIN,COTTER 1/4X2 SOCKET PIN...............................	EA	2
9	5	XBOZZ		19F59D10	27315	..PIN SOCKET SOCKET...	EA	1
9	6	PAOZZ	4030-00-443-2367	9T97C3	27315	..WEDGE SOCKET SOCKET.......................................	EA	1
9	7	XBOZZ		8P240C1	27315	..SOCKET CABLE UPPER BOOM...................................	EA	1
9	8	PAOZZ	5305-00-922-7994	MS90728-189	96906	.SCREW,CAP,HEXAGON 3/4-10X2-1/2 BOOM........................	EA	3
9	9	PAOZZ	5310-00-584-7888	MS35338-51	96906	.WASHER,LOCK 3/4 UPPER BOOM SECTION.........................	EA	8
9	10	PAOZZ	5310-00-763-8921	MS51967-23	96906	.NUT,PLAIN,HEXAGON 3/4-10 BOOM SECTION......................	EA	8
9	11	PAOZZ		13217E6279-4	97403	..BOLT,MACHINE SPACER.......................................	EA	1
9	12	PAOZZ	5310-00-820-6653	MS35338-50	96906	..WASHER,LOCK 5/8 SPACER....................................	EA	1
9	13	PAOZZ	5310-00-763-8920	MS51967-20	96906	..NUT,PLAIN,HEXAGON 5/8-11 SPACER...........................	EA	1
9	14	XBOZZ		13217E3086-2	97403	..SPACER BOOM UPPER BOOM....................................	EA	1
9	15	XBOZZ		13217E6279-2	97403	..SCREW,CAP,HEXAGON 1-8X18 CABLE GUARD......................	EA	1
9	16	XBOZZ		13217E6279-3	97403	..SCREW,CAP,HEXAGON 1-8X19 CABLE GUARD......................	EA	1
9	17	PAOZZ	5310-00-584-7889	MS35338-53	96906	..WASHER,LOCK 1 CABLE GUARD.................................	EA	2
9	18	PAOZZ	5310-00-762-6748	MS51967-29	96906	..NUT,PLAIN,HEXAGON 1-8 CABLE GUARD.........................	EA	2
9	19	XBOZZ		13217E3075-3	97403	..SPACER GUARD CABLE GUARD..................................	EA	2
9	20	XBOZZ		13217E3079-4	97403	..SPACER GUARD CABLE GUARD..................................	EA	2
9	21	XBOZZ	3815-00-938-5862	13217E3081	97403	..CABLE GUARD UPPER BOOM SECTION............................	EA	4
9	22	PAOZZ	5305-00-946-4947	MS90725-200	96906	..SCREW,CAP,HEXAGON 3/4-10X5-1/2 BOOM PIN...................	EA	2
9	23	PAOZZ	5310-00-584-7888	MS35338-51	96906	..WASHER,LOCK 3/4 BOOM PIN..................................	EA	2
9	24	PAOZZ	5310-00-763-8921	MS51967-23	96906	..NUT,PLAIN,HEXAGON 3/4-10 BOOM PIN.........................	EA	2
9	25	XBOZZ		13217E3083	97403	..COLLAR BOOM PIN POINT PIN.................................	EA	2
9	26	XBOZZ		13217E6289	97403	..LINK GUY CABLE BOOM POINT PIN.............................	EA	2
9	27	PAOZZ	3040-00-404-2982	13217E3085-2	97403	..SHAFT,STRAIGHT UPPER BOOM SECTION.........................	EA	1
9	28	XBOZZ		13217E3077	97403	..WASHER THRUST BOOM POINT SHAFT............................	EA	4
9	29	PAOZZ	4730-00-050-4208	MS15003-1	96906	..FITTING LUBE 1/8 NPT PULLEY...............................	EA	3
9	30	PBOZZ	3020-00-294-9682	725057K1	88853	..PULLEY GROOVE BOOM POINT..................................	EA	3
9	31	PAOZZ	3120-00-661-9415	13217E7540	97403	...BEARING SLEEVE PULLEY....................................	EA	3
9	32	PAOZZ	5315-00-846-4297	MS24665-752	96906	..PIN COTTER 3/8X3 GUIDE ROLLER PIN.........................	EA	2
9	33	PAOZZ	5310-00-982-6569	MS27183-35	96906	..WASHER,FLAT 2 GUIDE ROLLER PIN............................	EA	4
9	34	PAOZZ	3040-00-404-0705	13217E5287	97403	..SHAFT,STRAIGHT GUIDE ROLLER...............................	EA	1
9	35	XBOZZ		218T616	27315	..SPACER,ROLLER ROLLER PIN..................................	EA	2
9	36	XBOZZ		13217E6288	97403	..ROLLER GUIDE UPPER BOOM...................................	EA	3

(1) ILLUSTRATION (a) FIG NO.	(1) ILLUSTRATION (b) ITEM NO.	(2) SMR CODE	(3) FEDERAL STOCK NUMBER	(4) PART NUMBER	(5) FSCM	(6) DESCRIPTION USABLE ON CODE	(7) U/M	(8) QTY INC IN UNIT
9	37	XBOZZ		AD4-3	10054	..RIVET BLIND PLATE MOUNTING...............................	EA	8
9	38	XDOZZ		32Q46703	27315	..PLATE BOOM...	EA	1
9	39	XDOZZ		32Q26405	27315	..PLATE WEIGHT BOOM WEIGHT.................................	EA	1
9	40	PBODF	3815-00-120-4805	13217E6285	97403	..BOOM SECTION OUTER 15 FOOT BOOM ASSEMBLY.................	EA	1
9	41	PAOZZ	4730-00-050-4208	MS15003-1	96906	..FITTING,LUBRICATION 1/8 NPT LOWER BOOM...................	EA	2
9	42	PAOZZ	3120-00-585-8812	13217E6283	97403	..BEARING SLEEVE LOWER BOOM................................	EA	2
9	43	PAOZZ	5305-00-903-7298	MS90725-189	96906	..SCREW,CAP,HEXAGON 3/4-10X2-1/2 BOOM.....ON...............	EA	1
9	44	PAOZZ	5305-00-939-9204	MS90725-187	96906	..SCREW,CAP,HEX HD 3/4-10 X 3/4,BOOM.	EA	8
9	45	PAOZZ	5310-00-594-7888	MS35338-51	96906	..WASHER,LOCK 3/4..	EA	9
9	46	PAOZZ	5310-00-763-8921	MS51967-23	96906	..NUT,PLAIN,HEXAGON 3/4-10.................................	EA	9
9	47	XBOZZ		AD4-3	10054	..RIVET BLIND PLATE MOUNTING...............................	EA	8
9	48	XBOZZ		32Q26201	27315	..PLATE BOOM...	EA	1
9	49	XBOZZ		32Q26403	27315	. .PLATE WEIGHT BOOM.	EA	1
9	50	PAODF	3815-00-120-4804	13217E6262	97403	. .BOOM SECTION INNER SECTION ASSEMBLY.	EA	1

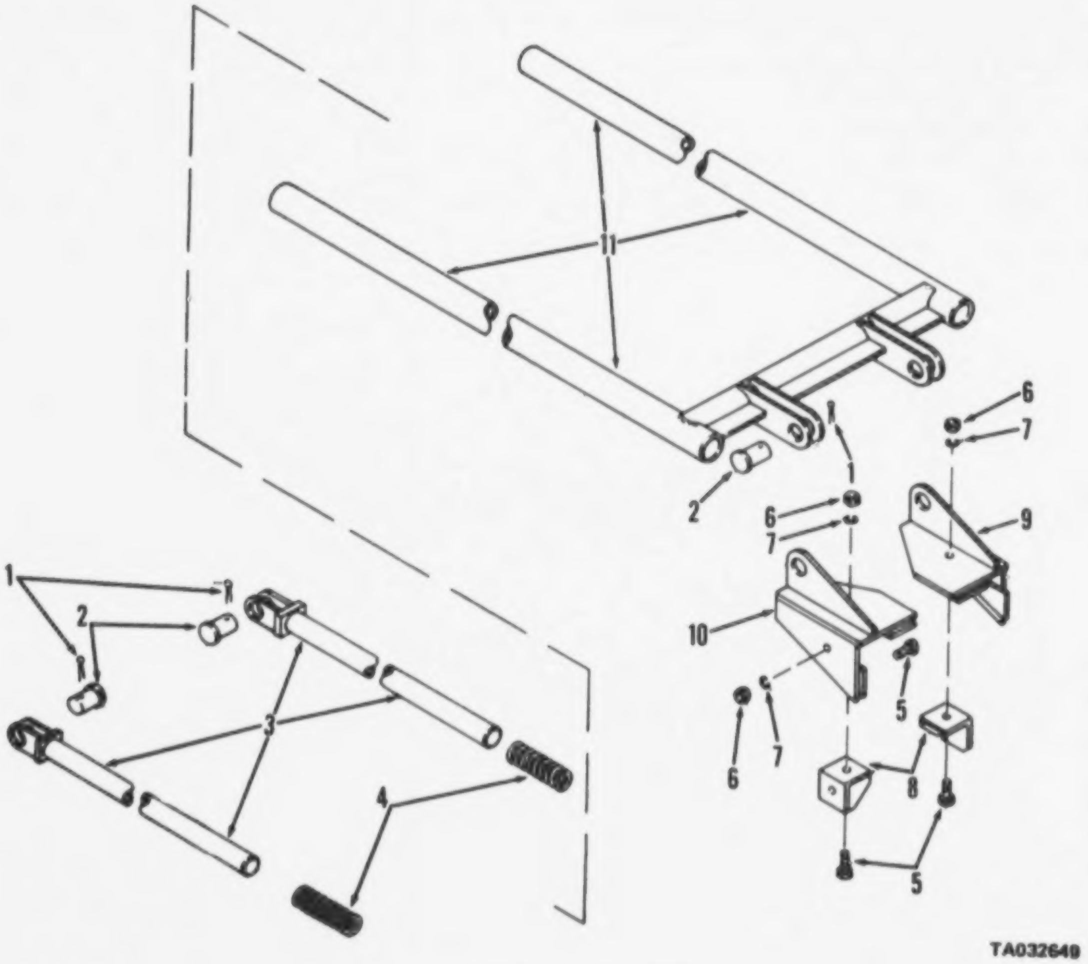

Figure 10. Backstop assembly, boom

(1) ILLUSTRATION (a) FIG NO.	(b) ITEM NO.	(2) SMR CODE	(3) NATIONAL STOCK NUMBER	(4) PART NUMBER	(5) FSCM	(6) DESCRIPTION USABLE ON CODE	(7) U/M	(8) QTY INC IN UNIT
						FUNCTIONAL GROUP 05 BOOM		
10		XBOZZ		2100N214-1	27315	BOOM BACK ASSEMBLY CRANE	EA	1
10	1	PAOZZ	5315-00-899-5931	MS24665-768	96906	.PIN,COTTER 3/8X3	EA	6
10	2	XBOZZ		2197274	27315	.PIN,CLEVIS ROD ASSEMBLY	EA	4
10	3	XBOZZ		2208194	27315	.ROD ASSEMBLY INNER	EA	2
10	4	PAOZZ	5360-00-456-2456	172438	27315	.SPRING,HELICAL ROD	EA	2
10	5	PAOZZ	5305-00-969-3141	MS90725-235	96906	.SCREW,CAP,HEXAGON 1/8X3-1/4 BRACKET	EA	4
10	6	PAOZZ	5310-00-762-6248	MS51967-29	96906	.NUT,PLAIN,HEXAGON 1-8 BRACKET	EA	4
10	7	PAOZZ	5310-00-584-7889	MS35338-53	96906	.WASHER,LOCK 1 BRACKET	EA	4
10	8	XBOZZ		2167616	27315	.BRACKET BACKSTOP	EA	2
10	9	XBOZZ		216N12802	27315	.BRACKET BACKSTOP	EA	1
10	10	XBOZZ		216N12801	27315	.BRACKET BACKSTOP	EA	1
10	11	XBOZZ		22045	27315	.BACKSTOP BOOM BACKSTOP	EA	1

AMC FORM 1779, 1 OCT 73 (REPLACES AMC TEST FORMS 1753 AND 1754, 6 APR 70, WHICH WILL BE USED UNTIL 1 JUL 74)

REPAIR PARTS LIST

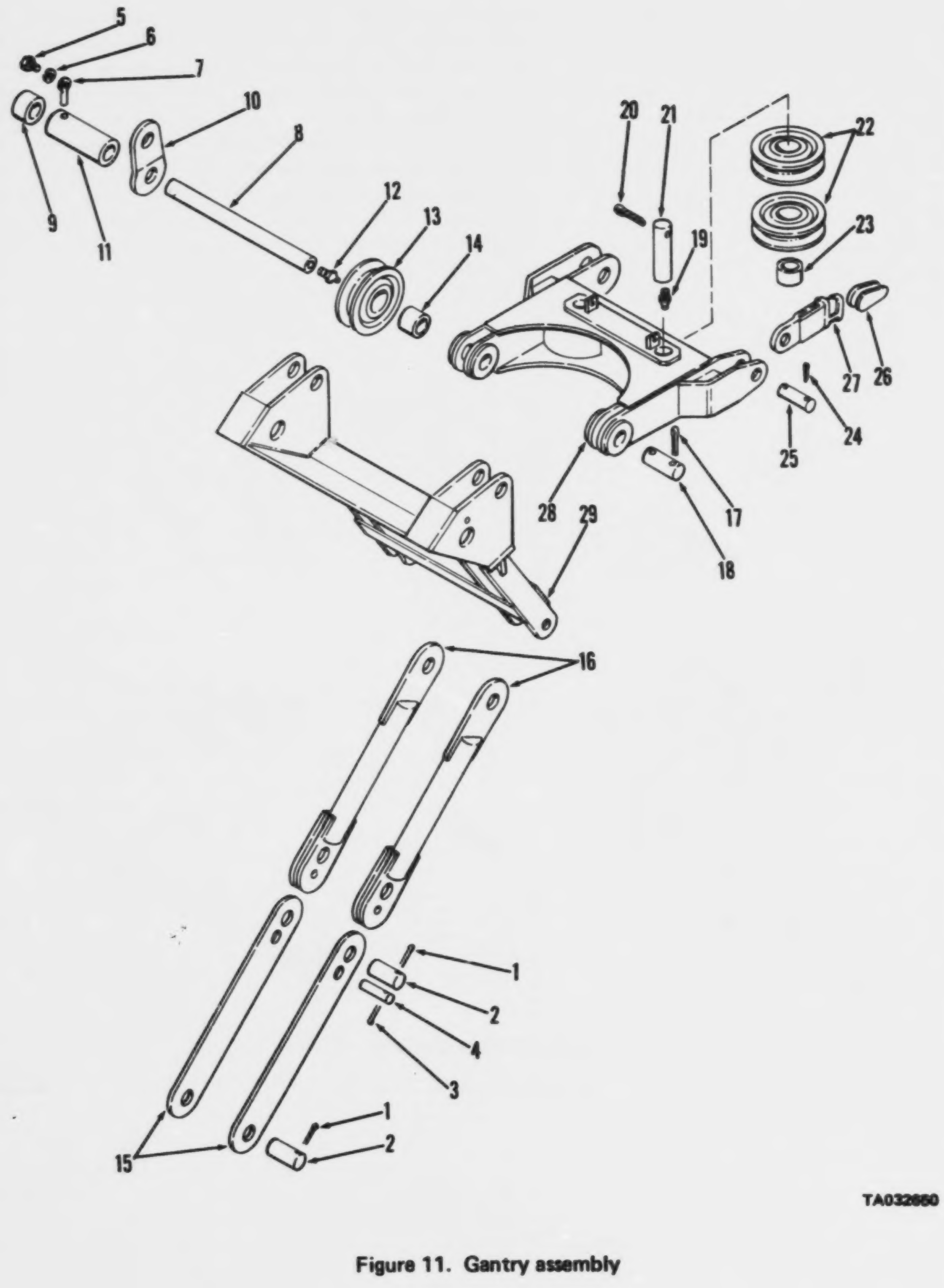

Figure 11. Gantry assembly

(1) ILLUSTRATION (a) FIG NO	(b) ITEM NO	(2) SMR CODE	(3) NATIONAL STOCK NUMBER	(4) PART NUMBER	(5) FSCM	(6) DESCRIPTION	USABLE ON CODE	(7) U/M	(8) QTY INC IN UNIT
						FUNCTIONAL GROUP 05 BOOM			
11		XOOOO		100N2574-1	27315	GANTRY ASSEMBLY FOLDING,BOOM		EA	1
11	1	PAOZZ	5315-00-846-4297	MS24665-752	96906	.PIN,COTTER 3/8X3 BASE PIN		EA	8
11	2	XDOZZ		19F6906	27315	.PIN,STRAIGHT GANTRY BASE		EA	4
11	3	PAOZZ	5315-00-059-0217	MS24665-624	96906	.PIN,COTTER 1/4X1-3/4 BASE PIN		EA	4
11	4	PAOZZ	5315-00-193-6402	19F57013	27315	.PIN,STRAIGHT GANTRY LEGS		EA	2
11	5	PAOZZ	5305-00-042-6417	MS90725-113	96906	.SCREW,CAP,HEXAGON 1/2-13X1-1/2 SHAFT		EA	1
11	6	PAOZZ	5310-00-584-5272	MS35338-48	96906	.WASHER,FLAT 1/2 SHAFT LOCKING		EA	1
11	7	XDOZZ		220T19	27315	.ROD END SHAFT SHAFT LOCKING		EA	1
11	8	XDOZZ		219P95	27315	.SHAFT GANTRY CRANE		EA	1
11	9	XDOZZ		18P949D86	27315	.SPACER SHAFT GANTRY		EA	1
11	10	XDOZZ		6T2496	27315	.LINK WIRE ROPE GANTRY		EA	2
11	11	XDOZZ		18P949D612	27315	.SPACER SHAFT GANTRY		EA	1
11	12	PAOZZ	4730-00-172-0034	MS15003-6	96906	.FITTING,LUBRICATION 1/8 NPT 90 DEG GANTRY SHAFT		EA	1
11	14	PAOZZ		5Z279	27315	..BEARING SLEEVE PULLEY		EA	1
11	15	XDOZZ		11P1691	27315	.MEMBER REAR LOWER GANTRY		EA	2
11	16	XDOZZ		11P1690	27315	.MEMBER REAR UPPER GANTRY		EA	2
11	17	PAOZZ	5315-00-846-4297	MS24665-752	96906	.PIN,COTTER 3/8X3 SPREADER PIN		EA	4
11	18	PAOZZ	5315-00-894-2467	19F6907	27315	.PIN,STRAIGHT SPREADER ASSEMBLY		EA	2
11		XDOZZ		100N2580-1	27315	.SPREADER ASSEMBLY GANTRY		EA	1
11	19	PAOZZ	4730-00-050-4208	MS15003-1	96906	..FITTING,LUBRICATION SPREADER PULLEY		EA	2
11	20	XBOZZ		MS24665-904	96906	..PIN,COTTER 1/2X3-1/2 PULLEY PIN		EA	2
11	21	XDOZZ		19P544	27315	..PIN,STRAIGHT 1/2X3-1/2 PULLEY		EA	2
11	23	XBOZZ		CW3-44	91825	...BEARING SLEEVE PULLEY		EA	4
11	24	PAOZZ	5315-00-013-7303	MS24665-626	96906	..PIN,COTTER 1/4X2-1/4 ROPE SOCKET PIN		EA	2
11	25	XDOZZ		19F5909	27315	..PIN,STRAIGHT ROPE SOCKET		EA	2
11	26	PAOZZ	4030-00-126-4315	8T95C1	27315	..WEDGE,WIRE ROPE WIRE ROPE		EA	1
11	27	XAOZZ		8P214	27315	..SOCKET WIRE ROP GANTRY		EA	1
11	28	XDOZZ		29N466	27315	..FRAME SPREADER GANTRY		EA	1
11	29	XDOZZ		11N2132	27315	.MEMBER FRONT GANTRY		EA	1

AMC FORM 1779, 1 OCT 73 (REPLACES AMC TEST FORMS 1783 AND 1784, 6 APR 70, WHICH WILL BE USED UNTIL 1 JUL 74)

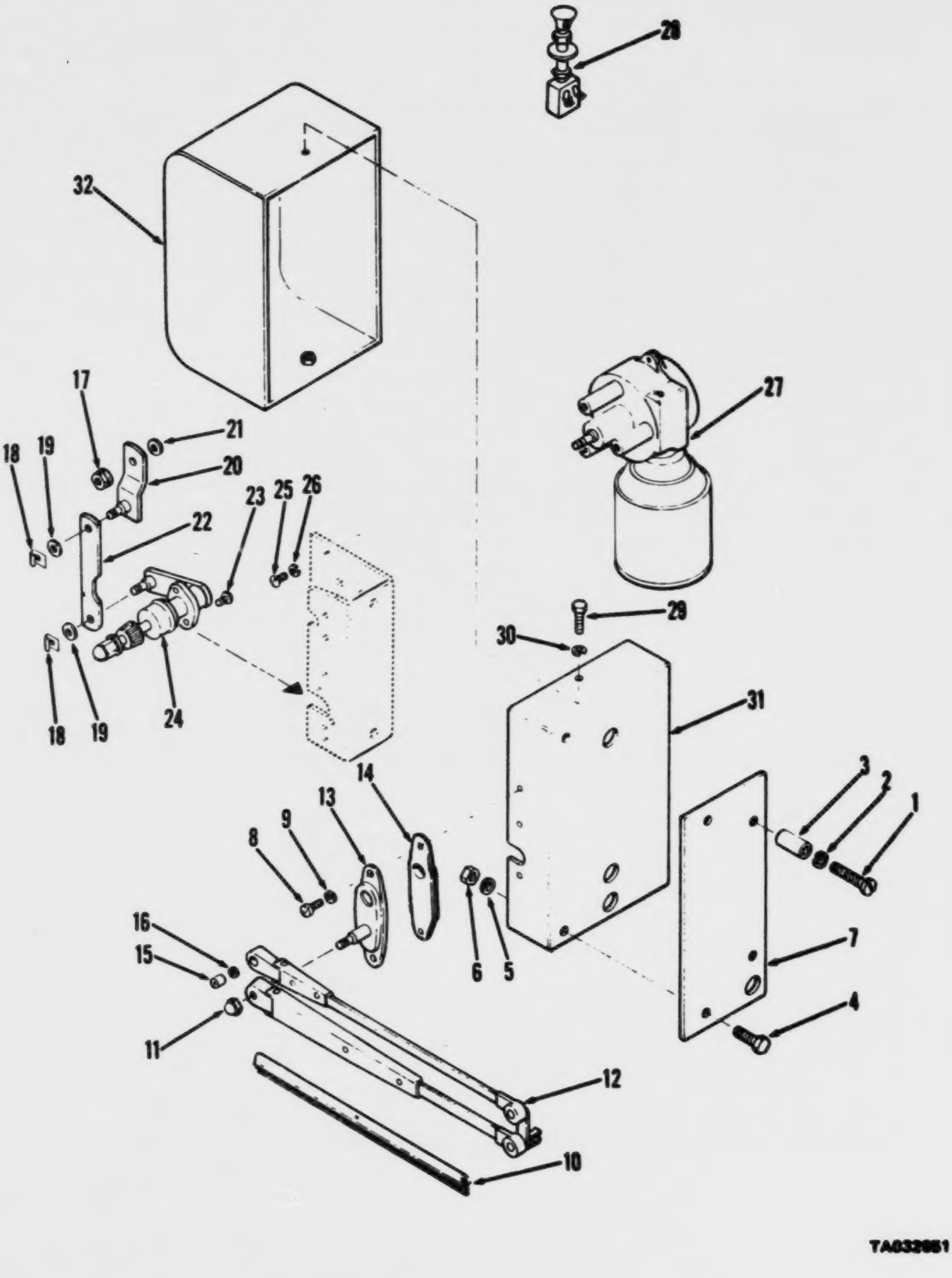

Figure 12. Wiper assembly

(1) ILLUSTRATION		(2)	(3)	(4)	(5)	(6)	(7)	(8)
(a) FIG NO.	(b) ITEM NO.	SMR CODE	FEDERAL STOCK NUMBER	PART NUMBER	FSCM	DESCRIPTION USABLE ON CODE	U/M	QTY INC IN UNIT
						FUNCTIONAL GROUP 06 WINDSHIELD WIPER		
12		PBOOO		100N2603	27315	WIPER ASSEMBLY CRANE WINDSHIELD..............................	EA	1
12	1	PAOZZ	5305-00-984-5691	MS35206-311	96906	.SCREW CAP 3-8-16X1 MOUNTING PLATE..........................	EA	2
12	2	PAOZZ	5310-00-637-9541	MS35338-46	96906	.WASHER LOCK 3-8 MTG PLATE..................................	EA	1
12	3	XDOZZ		19H38920398	27315	.SPACER PLATE WIPER...	EA	1
12	4	PAOZZ	5305-00-942-2196	MS18154-60	96906	.SCREW,CAP,HEXAGON 3-8-16X1 WIPER...........................	EA	2
12	5	PAOZZ	5310-00-637-9541	MS35338-46	96906	.WASHER LOCK 3-8 SUPPORT....................................	EA	2
12	6	PAOZZ	5310-00-732-0558	MS51967-8	96906	.NUT,PLAIN,HEXAGON 3-8-16 SUPPORT...........................	EA	2
12	7	XDOZZ		18T1058	27315	.PLATE MOUNTING WIPER.......................................	EA	1
12	8	PAOZZ	5305-00-988-1727	MS35206-283	96906	.SCREW MACHINE 1-4-20X1 WIPER ASSEMBLY......................	EA	2
12	9	PAOZZ	5310-00-582-5965	MS35338-44	96906	.WASHER LOCK 1-4 WIPER ASSEMBLY.............................	EA	2
12		PAOZZ	2540-01-038-4726	88Z361	27315	.WINDSHIELD WIPER CRANE.....................................	EA	1
12	10	PAOZZ	2540-00-140-9816	BD721011-16	01843	..BLADE WINDSHIELD CRANE WINDSHIELD..........................	EA	1
12	11	KFOZZ		01872-27NT27WC	01843	..NUT ACORN WIPER PART OF KIT P/N KT7210655..................	EA	1
12	12	XDOZZ		LE721139-20	01843	..ARM WIPER CRANE WINDSHIELD.................................	EA	1
12	13	KFOZZ		SP721023A	01843	..PLATE PANTOGRAPH PART OF KIT P/N........65.................	EA	1
12	14	KFOZZ		GA721006	01843	..GASKET PLATE MOUNTING PART OF KIT P/N...T721065............	EA	1
12	15	PAOZZ	5310-01-035-0838	NT721018	01843	..NUT: SHAFT...	EA	1
12	16	PAOZZ	5310-01-035-0869	WA721033	01843	..WASHER WIPER...	EA	1
12	17	XAOZZ		NT1155	01843	..NUT DRIVE ARM WIPER..	EA	1
12	18	XDOZZ	5340-00-119-2065	SP7211	01843	..CLIP SPRING LINK...	EA	2
12	19	XAOZZ		WA1654	01843	..WASHER,FLAT WIPER..	EA	2
12	20	XAOZZ		LF721125A1	01843	..ARM DRIVE WIPER..	EA	1
12	21	XAOZZ		WA1793	99066	..WASHER WIPER...	EA	1
12	22	XDOZZ		LK721014	01843	..LINK CONNECTING DRIVE ARM..................................	EA	1
12	23	PAOZZ	5305-00-088-9044	MS35207-260	96906	..SCREW,MACHINE PIVOT SHAFT ASSEMBLY.........................	EA	1
12	24	XAOZZ		SH721201	01843	..SHAFT PIVOT WIPER..	EA	1
12	25	PAOZZ	5305-00-939-1366	SC1692	01843	..SCREW ASSEMBLED WIPER MOTOR................................	EA	3
12	26	XBOZZ		WA1216	01843	..WASHER MOUNTING WIPER MOTOR................................	EA	1
12	27	PAOZZ	2540-01-036-4435	WWC24K2633	01843	..MOTOR,WINDSHIELD WIPER.....................................	EA	1
12	28	PAOZZ	5930-01-022-2079	M628	13445	..SWITCH,ROTARY CRANE..	EA	1
12		XOOZZ		27P2427F1	27315	.SUPPORT WIPER CRANE...	EA	1
12	29	PAOZZ	5305-00-068-0502	MS90725-6	96906	...SCREW,CAP,HEX HD: 1/4-20 X 3/4,COVER......................	EA	1
12	30	PAOZZ	5310-00-582-5965	MS35338-44	96906	..WASHER LOCK 1-4 COVER......................................	EA	2
12	31	XDOZZ		10-27P2427	27315	..COVER WIPER SUPPORT..	EA	1
12	32	XDOZZ		11-27P2427	27315	..ENCLOSURE WIPER..	EA	1
12		KBOZZ		KT721065	01843	..PART KIT CRANE WINDSHIELD..................................	EA	1
12	11					NUT ACORN		
12	13					PLATE		
12	14					GASKET PLATE		

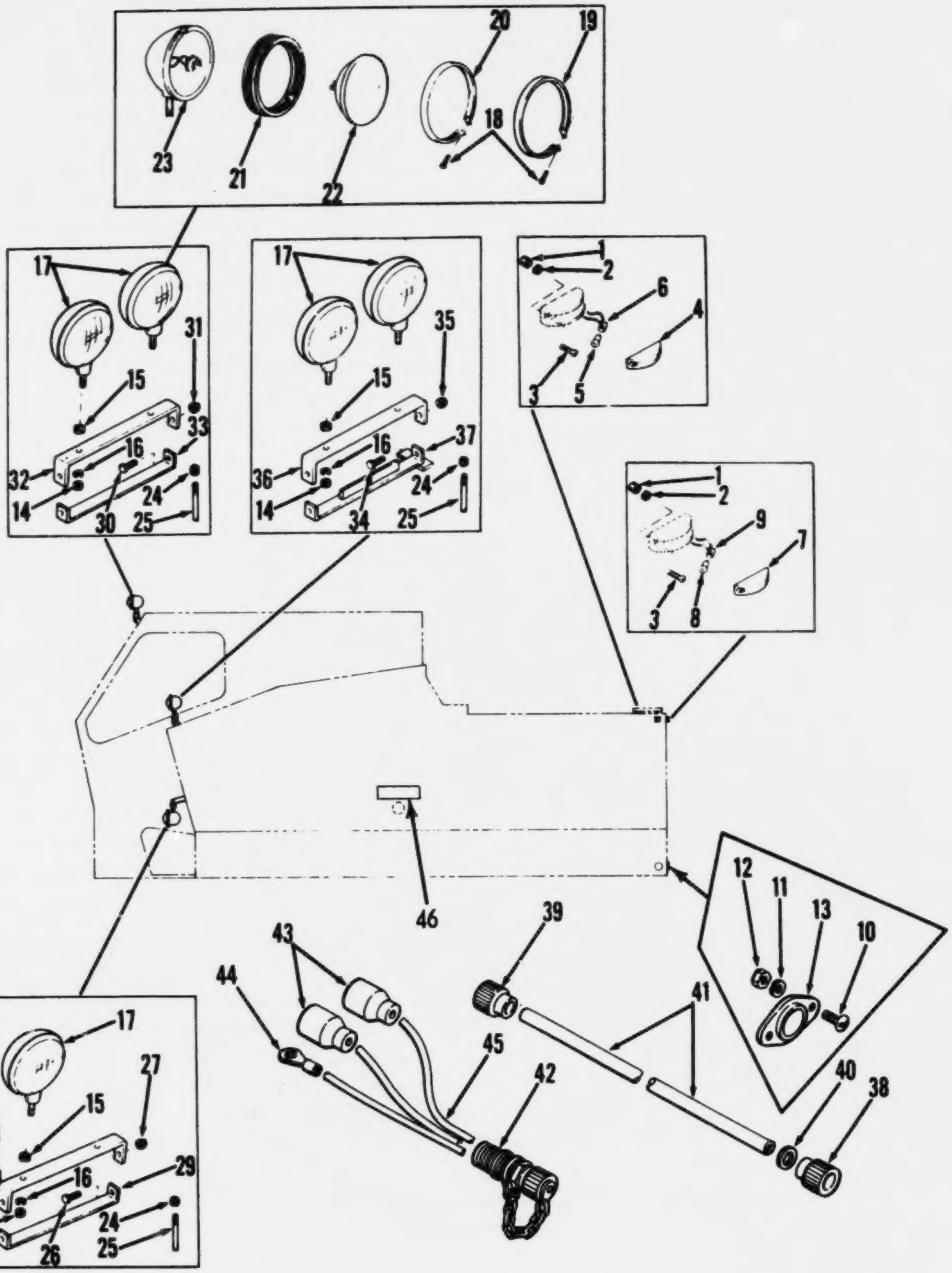

Figure 13. Floodlights and marker lights

(1) ILLUSTRATION (a) FIG NO.	(b) ITEM NO.	(2) SMR CODE	(3) FEDERAL STOCK NUMBER	(4) PART NUMBER	(5) FSCM	(6) DESCRIPTION USABLE ON CODE	(7) U/M	(8) QTY INC IN UNIT
						FUNCTIONAL GROUP 07 LIGHTS,FLOOD,MARKER,	EA EA EA	1 1 1
13	1	XBOZZ	5310-00-934-9758	MS35649-202	96906	.NUT PLAIN 10-24 CLEAR LIGHTS..................................	EA	8
13	2	XDOZZ	5310-00-045-3296	MS35338-43	96906	.WASHER LOCK 10 CLEAR LIGHTS..................................	EA	8
13	3	XBOZZ	5305-00-050-9229	MS51957-63	96906	.SCREW MACHINE 10-24X1/2 CLEAR LIGHTS..........................	EA	8
13		PAOZZ	6220-00-727-3288	MS35424-2	96906	.LIGHT MARKER BLACKOUT CLEAR..................................	EA	4
13	4	PAOZZ	6220-00-752-5993	MS35420-2	96906	..LENS LIGHT RED CLEAR MARKER..................................	EA	1
13	5	PAOZZ	6240-00-155-7807	MS15570-303R	96906	..LAMP 24V RED CLEAR MARKER..................................	EA	1
13	6	XAOZZ		MS35422-1	96906	..LAMPHOLDER RED CLEAR MARKER..................................	EA	1
13		PAOZZ	6220-00-726-1916	MS35423-2	96906	.LIGHT,MARKER CLEARANCE SIDE..................................	EA	4
13	7	PAOZZ	6220-00-299-7426	MS35421-2	96906	..LENS MARKER LIGHT..................................	EA	1
13	8	PAOZZ	6240-00-155-7807	MS15570-303R	96906	..LAMP,INCANDESCENT: 24 VOLT,MARKER..........................	EA	4
13	9	XAOZZ		MS35422-1	96906	..LAMPHOLDER,LIGHT CLR MARKER..................................	EA	4
13	10	XBOZZ	5305-00-050-9229	MS51957-63	96906	.SCREW,MACHINE 10-24X1/2 REFLECTORS..........................	EA	8
13	11	PAOZZ	5310-00-045-3296	MS35338-43	96906	.WASHER,LOCK 10 REFLECTORS..................................	EA	8
13	12	PAOZZ	5310-00-934-9758	MS35649-202	96906	.NUT,PLAIN,HEXAG 10-24 REFLECTORS..........................	EA	8
13	13	PAOZZ	9905-00-205-2795	MS35387-1	96906	.REFLECTOR,INDICATOR RED CLEARANCE..........................	EA	4
13	14	PAOZZ	5310-00-763-8920	MS51967-20	96906	.NUT,PLAIN,HEXAG 5/8-11 FLOODLIGHT..........................	EA	6
13	15	PAOZZ	5310-00-820-6653	MS35338-50	96906	.WASHER,LOCK 5/8 FLOODLIGHTS..................................	EA	6
13	16	PAOZZ	5310-00-851-2677	MS35691-49	96906	.NUT,JAM,HEXAGON 5/8-11 FLOODLIGHT..........................	EA	6
13	17	XDOOZ	6220-00-953-4652	899856	24617	.FLOODLIGHT,ASSY CRANE..................................	EA	6
13	18	XBOZZ		9411423	73331	..SCREW,MACHINE CRANE FLOODLIGHT..........................	EA	2
13	19	XAOZZ		5931947	73331	..MOLDING, OUTER CRANE FLOODLIGHT..........................	EA	1
13	20	XAOZZ		5931949	73331	..MOLDING,INNER CRANE FLOODLIGHT..........................	EA	1
13	21	PAOZZ	5340-00-896-2187	5949719	73331	..MOUNT, RESILIENT CRANE FLOODLIGHT..........................	EA	1
13	22	PAOZZ	6240-00-643-0687	5949701	73331	..LAMP, INCANDESCENT CRANE FLOODLIGHT..........................	EA	1
13	23	XAOZZ		5932071	73331	..BODY,FLOODLIGHT CRANE FLOODLIGHT..........................	EA	1
13	24	XBOZZ		C94V001	27315	.LOCKNUT,ELET FLOODLIGHT ADAPTER..........................	EA	6
13	25	XDOZZ		J142P138	04582	.ADAPTER,CABLE FLOODLIGHT..................................	EA	6
13		XBOZZ		2100P107-2	27315	.BRACKET,ASSY LOWER FLOODLIGHT..........................	EA	2
13	26	PAOZZ	5305-00-724-5910	MS90725-162	96906	.SCREW,CAP,HEXAG 5/8-11XU-1/2 BRACKET..........................	EA	4
13	27	XDOZZ		29NU101	72962	..NUT,SELF-LOCKING 5/8-11 BRACKET..........................	EA	4
13	28	XAOZZ		216P37602	27315	..BRACKET,UPPER FLOODLIGHT..................................	EA	2
13	29	XDOZZ		216P37702	27315	..BRACKET,LOWER FLOODLIGHT..................................	EA	2
13		XDOZZ		2100P107-1	27315	.BRACKET,ASSY FLOODLIGHT..................................	EA	1
13	3	PAOZZ	5305-00-724-5910	MS90725-162	96906	..SCREW,CAP,HEXAG 5/8-11X1-1/2 BRACKET..........................	EA	2
13	4	XDOZZ		29NU101	72962	..NUT,SELF-LOCKING 5/8-11 BRACKET..........................	EA	2
13	32	XDOZZ		216P37D1	27315	..BRACKET,UPPER FLOODLIGHT..................................	EA	1
13	33	XDOZZ		216P377D1	27315	..BRACKET,LOWER FLOODLIGHT..................................	EA	1

(1) ILLUSTRATION (a) FIG NO.	(b) ITEM NO.	(2) SMR CODE	(3) NATIONAL STOCK NUMBER	(4) PART NUMBER	(5) FSCM	(6) DESCRIPTION USABLE ON CODE	(7) U/M	(8) QTY INC IN UNIT
13		XDOOO		2100P106-1	27315	.BRACKET,ASSY FLOODLIGHT..............................	EA	1
13	34	PAOZZ	5305-00-724-5910	MS90725-162	96906	..SCREW,CAP,HEXAG 5/8-11X1-1/2 BRACKET..................	EA	2
13	35	XDOZZ		29U101	72962	..NUT,SELF-LOCKING 5/8-11 BRACKET.....................	EA	2
13	36	XDOZZ		216P37601	27315	..BRACKET,UPPER FLOODLIGHT..............................	EA	1
13	37	XDOZZ		216P375	27315	..BRACKET,LOWER FLOODLIGHT..............................	EA	1
13		MOOZZ		79Z1592	27315	.LEAD,ELECTRICAL CONNECTING..............................	EA	1
13	38	PAOZZ	5935-00-991-3332	1603C12	00447	..CONNECTOR,PLUG CONNECTING CABLE......................	EA	1
13	39	PAOZZ	5935-00-686-2605	8724231	19207	..CONNECTOR,PLUG CONNECTING CABLE......................	EA	1
13	40	XBOZZ		MS3057-8	96906	..NUT,CONNECTOR CONNECTING CABLE........................	EA	2
13	41	PAOZZ	6145-00-899-0581	MILC3432	81349	..CABLE,SPECIAL 3W,14GA,59IN,CONNECTING................	EA	1
13		MOOOO		790D51	27315	.WIRING HARNESS TROUBLE LIGHT..........................	EA	1
13	42	PAOZZ	5935-00-368-4857	772C490	19207	..CONNECTOR HARNESS......................................	EA	1
13	43	PAOZZ	5935-00-462-6603	MS27142-2	96906	..CONNECTOR,PLUG HARNESS.................................	EA	2
13	44	PAOZZ	5940-00-557-1627	MS25036-53	96906	..TERMINAL,LUG HARNESS...................................	EA	1
13	45	XDOZZ		MILC13468/1-5	81349	..WIRE,14 GAGE 3 WIRES 4 INCHES,HARNESS................	EA	1
13	46	XBOZZ		32Z875D14	27315	.PLATE,INSTRUCTOR CABLE CONNECTION......................	EA	1

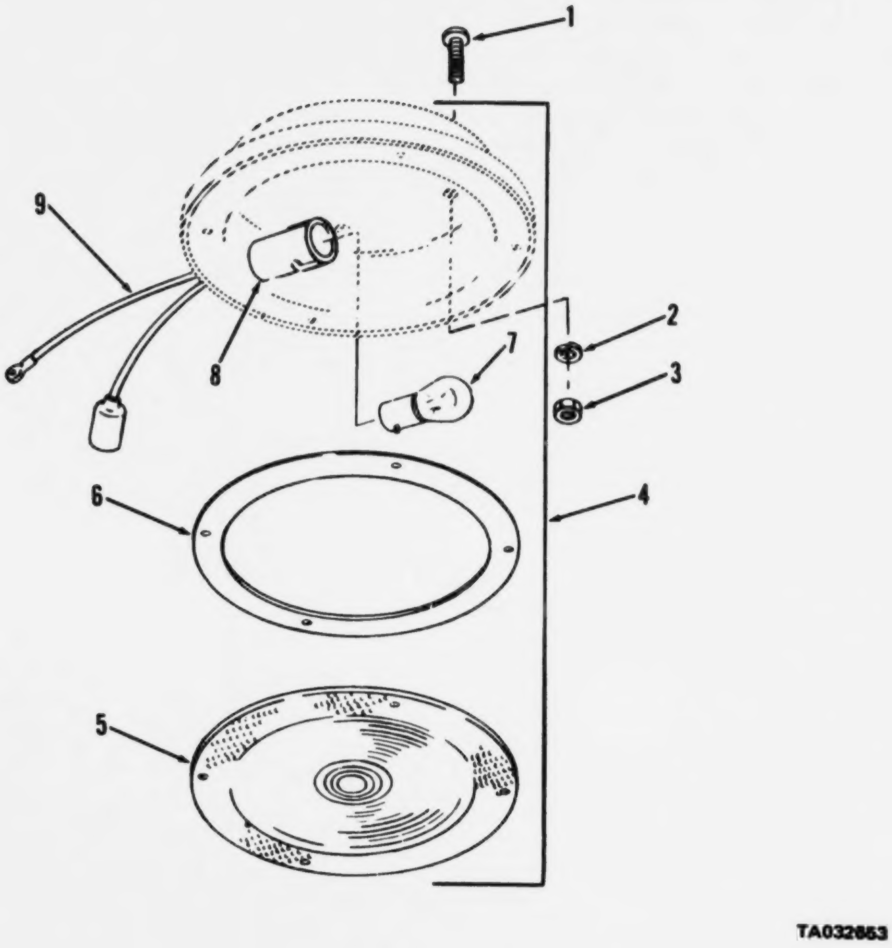

Figure 14. Domelight

(1) ILLUSTRATION (a) FIG NO.	(b) ITEM NO.	(2) SMR CODE	(3) FEDERAL STOCK NUMBER	(4) PART NUMBER	(5) FSCM	(6) DESCRIPTION USABLE ON CODE	(7) U/M	(8) QTY INC IN UNIT
						FUNCTIONAL GROUP 07 LIGHTS,FLOOR,MARKER,DOOR		
14	1	PAOZZ	5305-00-068-0500	MS90725-3	96906	.SCREW,CAP,HEX HD: 112-20 X 1/2,DOME LIGHT....................	EA	6
14	2	PAOZZ	5310-00-582-5965	MS35338-44	96906	.WASHER,LOCK 1/4 DOME LIGHT....................................	EA	6
14	3	PAOZZ	5310-00-761-6882	MS51967-2	96906	.NUT,PLAIN,HEXAG 1/4-20 DOME LIGHT.............................	EA	1
14	4	XDOZZ		61-0157-0	78422	.DOME,LIGHT ASSY CRANE CAB.....................................	EA	1
14	5	PAOZZ	6220-00-443-5582	61-0229-0	78422	..LENS CRANE CAB...	EA	3
14	6	PAOZZ	5330-00-443-6043	61-0216-0	78422	..GASKET DOME LIGHT..	EA	3
14	7	PAOZZ	6240-00-155-7790	61-0230-0	78422	..LAMP,INCANDESCENT DOME LIGHT.................................	EA	3
14	8	XAOZZ		61-0231-1	78422	..SOCKET,LAMP DOME LIGHT.......................................	EA	1
14	9	PAOZZ	2590-00-403-5519	56-0304-0	78422	..LEAD,ELECTRICAL DOME LIGHT...................................	EA	3

AMC FORM 1779, 1 OCT 73 (REPLACES AMC TEST FORMS 1753 AND 1754, 6 APR 70, WHICH WILL BE USED UNTIL 1 JUL 74)

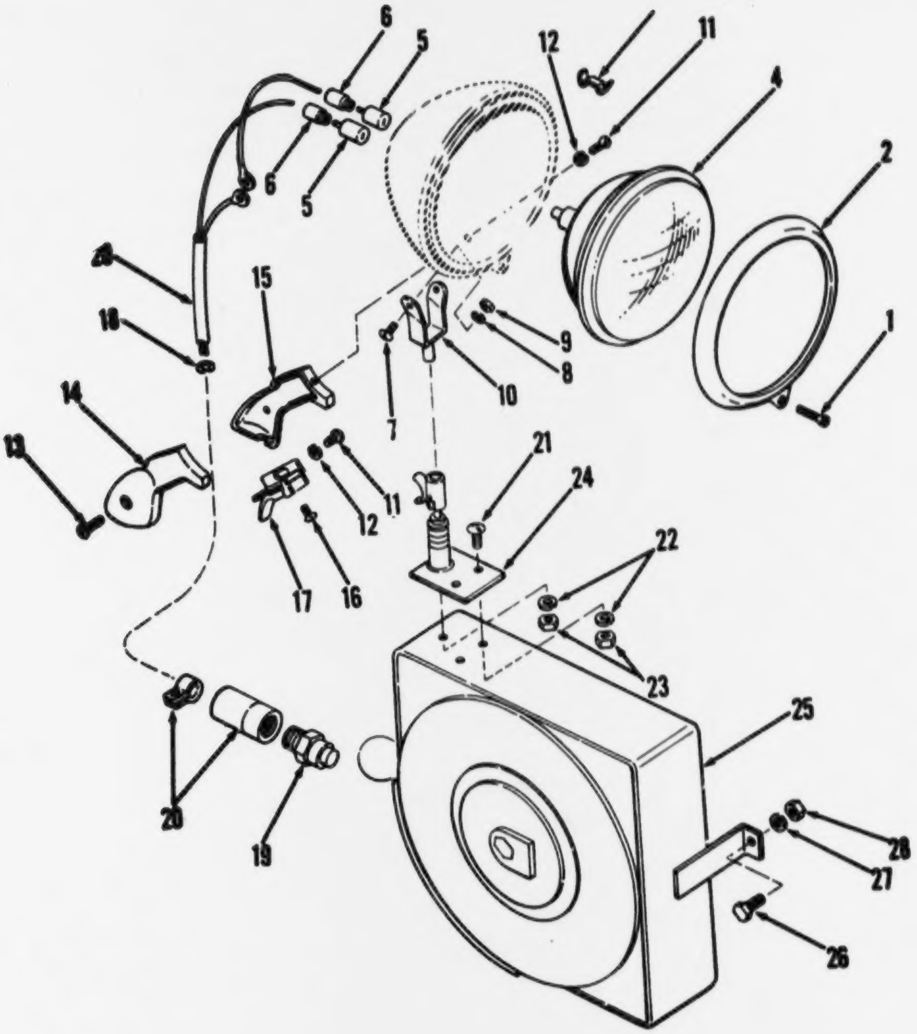

Figure 15. Troublelight assembly

(1) ILLUSTRATION (a) FIG NO.	(b) ITEM NO.	(2) SMR CODE	(3) FEDERAL STOCK NUMBER	(4) PART NUMBER	(5) FSCM	(6) DESCRIPTION USABLE ON CODE	(7) U/M	(8) QTY INC IN UNIT
						FUNCTIONAL GROUP 07 LIGHTS,FLOOD,MARKER, DOOR		
15		XDOZZ	6230-00-895-3192	610142	33525	LIGHT EXTENSION CRANE	EA	1
15		PAOZZ	6230-00-052-0700	1679-6	33043	.TROUBLE LIGHT TROUBLE	EA	1
15	1	XBOZZ	5305-01-029-6831	72880	33525	..SCREW,MACHINE LAMP RIM	EA	1
15	2	XAOZZ		610140	33525	..RIM,LAMP TROUBLE LIGHT	EA	1
15	3	XAOZZ		544751	33525	..CLIP,RIM LAMP	EA	4
15	4	PAOZZ	6240-00-643-0687	MS17165-4578	96906	..LAMP,INCANDESCENT 24 VOLT TROUBLE LIGHT	EA	1
15	5	PAOZZ	5935-00-034-8009	8338565	19207	..CONNECTOR,PLUG LAMP WIRE	EA	2
15	6	XDOZZ		8338560	77060	..CONNECTOR,PLUG LAMP WIRE	EA	2
15	7	XBOZZ	5305-01-045-4157	526853	33525	..SCREW,MACHINE LIGHT MOUNT	EA	1
15	8	XBOZZ		527486	33525	..WASHER,LOCK LIGHT MOUNT	EA	1
15	9	XBOZZ		527259	33525	..NUT,PLAIN HEXAGON LIGHT MOUNT	EA	1
15	10	XDOZZ		610141	33525	..MOUNT,LIGHT TROUBLE	EA	1
15	11	XDOZZ	5305-01-045-4157	526853	33525	..SCREW,MACHINE HANDLE	EA	5
15	12	XBOZZ		527486	33525	..WASHER,LOCK HANDLE	EA	5
15	13	XDOZZ	5305-00-429-1115	526521	80538	..SCREW,MACHINE HANDLE	EA	2
15	14	XAOZZ		528277	33525	..HANDLE,HALF PISTOL GRIP	EA	1
15	15	XAOZZ		528278	33525	..HANDLE,HALF PISTOL GRIP	EA	1
15	16	XDOZZ		526427	33525	..SCREW,MACHINE SWITCH	EA	2
15	17	PAOZZ	5930-00-195-5474	507766	80538	..SWITCH,TRIGGER TROUBLE LIGHT	EA	1
15	18	XDOZZ		528280	33525	..RING RETAINING CABLE	EA	1
15	19	XBOZZ		MS3106E16-115X	96906	..CONNECTOR PLUG ELECTRICAL CABLE	EA	1
15	20	XCOZZ		518258	33525	..CABLE,LIGHT,TROUBLE,40 FT	EA	1
15	21	XDOZZ	5305-00-109-0287	1776-1610	80538	.SCREW,MACHINE BRACKET	EA	1
15	22	XDOZZ	5310-00-202-1862	5033-1600	80538	.WASHER,LOCK BRACKET	EA	1
15	23	XDOZZ	5310-00-202-1836	1807-1600	80538	.NUT,PLAIN,HEXAGON BRACKET	EA	2
15	24	XDOZZ		611105	33525	.BRACKET MTG TROUBLE LIGHT	EA	1
15	25	XDOZZ		528275	33525	.REEL CABLE TROUBLE LIGHT	EA	1
15	26	XDOZZ	5305-01-020-5925	MS90725-307	96906	SCREW,MACHINE 3/8-16X1/2 TROUBLE LIGHT	EA	2
15	27	XDOZZ	5310-00-637-9541	MS35335-46	96906	WASHER,LOCK 3/8 TROUBLE LIGHT	EA	5
15	28	XDOZZ	5310-00-056-3395	MS35649-2382	96906	NUT,PLAIN,HEXAG 3/8-16 TROUBLE LIGHT	EA	2

AMC FORM 1770, 1 OCT 73 (REPLACES AMC TEST FORMS 1763 AND 1764, 8 APR 70, WHICH WILL BE USED UNTIL 1 JUL 74)

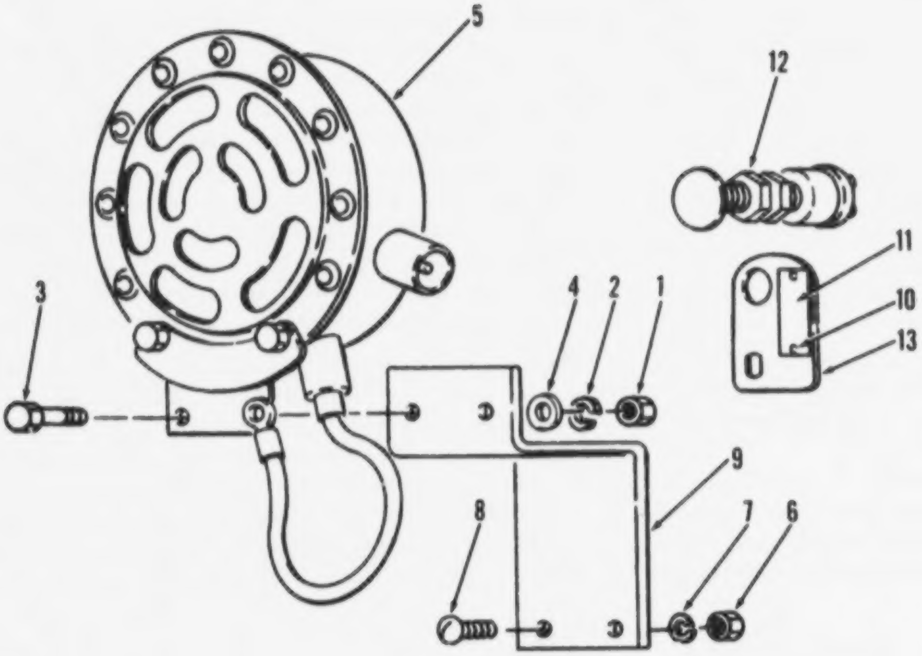

Figure 16. Horn assembly

(1) ILLUSTRATION (a) FIG NO	(b) ITEM NO.	(2) SMR CODE	(3) NATIONAL STOCK NUMBER	(4) PART NUMBER	(5) FSCM	(6) DESCRIPTION USABLE ON CODE	(7) U/M	(8) QTY INC IN UNIT
						FUNCTIONAL GROUP 08 HORN		
16	1	XOOZZ	5310-00-761-6882	MS51967-2	96906	NUT,PLAIN,HEXAG 1/4-20 HORN	EA	2
16	1	PAOZZ	5310-00-761-6882	MS51967-2	96906	NUT,PLAIN,HEXAGON 1/4-20 HORN BRACKET	EA	2
16	2	XOOZZ	5310-00-582-5965	MS35338-44	96906	WASHER,LOCK 1/4 HORN	EA	1
16	3	PAOZZ	5305-00-068-0500	MS90725-3	96906	SCREW,CAP,HEX HD 1/4-20 X 1/2, HORN	EA	2
16	4	XBOZZ		182207508	27315	WASHER,SEALING HORN	EA	2
16	5	PAOOZ	2590-00-678-6140	MS51074-1	96906	HORN,ELECTRICAL SWING WARNING	EA	1
16	6	XOOZZ	5310-00-761-6882	MS51967-2	96906	NUT, PLAIN HEX HORN BRACKET MOUNTING	EA	2
16	7	XOOZZ	5310-00-582-5965	MS35338-44	96906	WASHER LOCK 1/4 HORN BRACKET	EA	2
16	8	PAOZZ	5305-00-068-0500	MS90725-3	96906	SCREW,CAP,HEX HD 1/4-20 X 1/2, BRACKET	EA	2
16	9	XOOZZ		2167442	27315	BRACKET HORN	EA	1
16	10	XOOZZ	5305-00-470-9694	20290901	27315	SCREW DRIVE 6X1/4 PLATE	EA	2
16	11	XBOZZ		322879017	27315	PLATE,INDENT HORN SWING ALARM	EA	1
16	12	PAOZZ	5930-00-021-6314	M451	13445	SWITCH HORN	EA	1
16	13	XOOZZ		2167615	27315	BRACKET,SWITCH HORN	EA	1

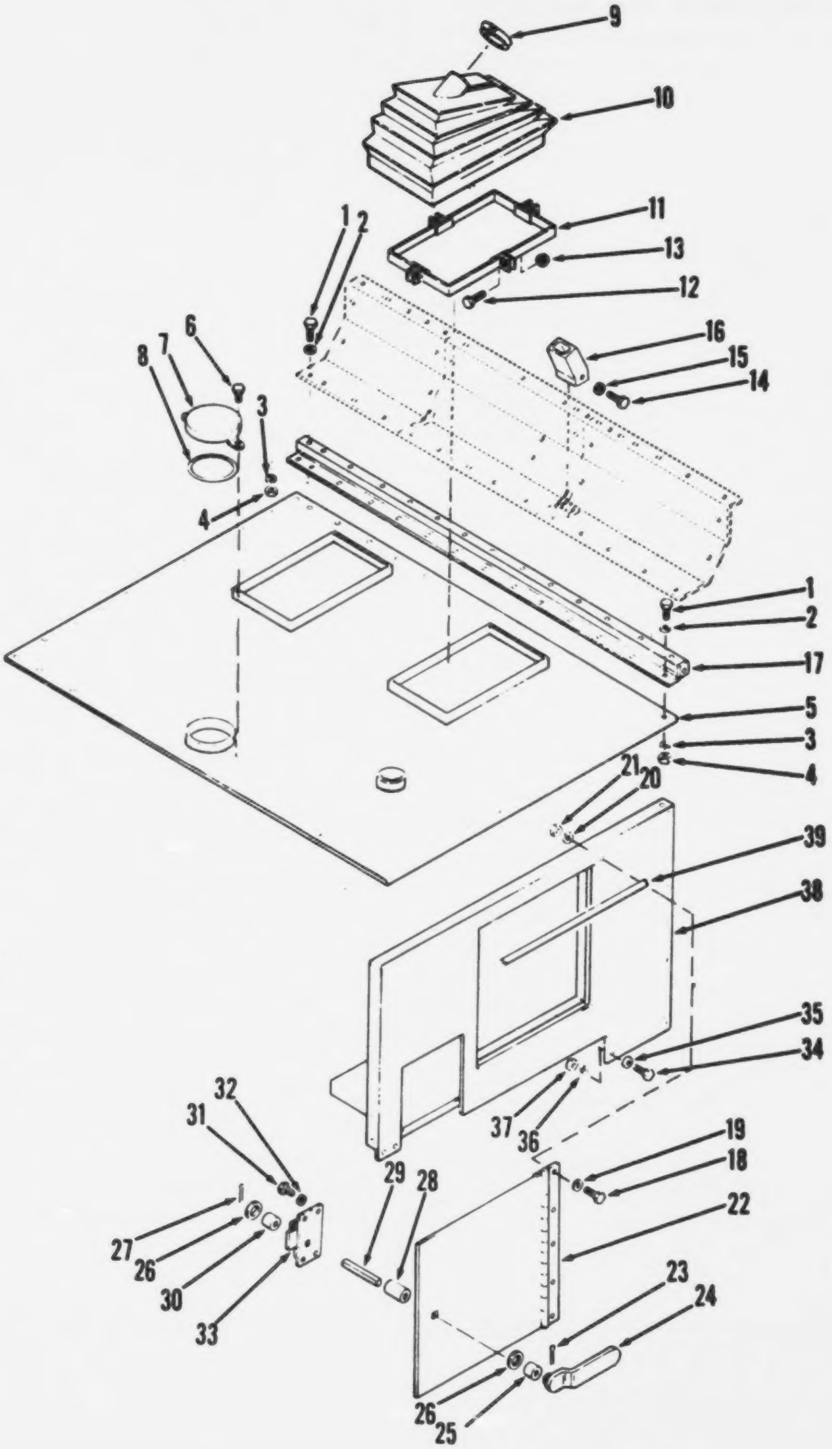

Figure 17. Compartment assembly, engine (Sheet 1 of 2)

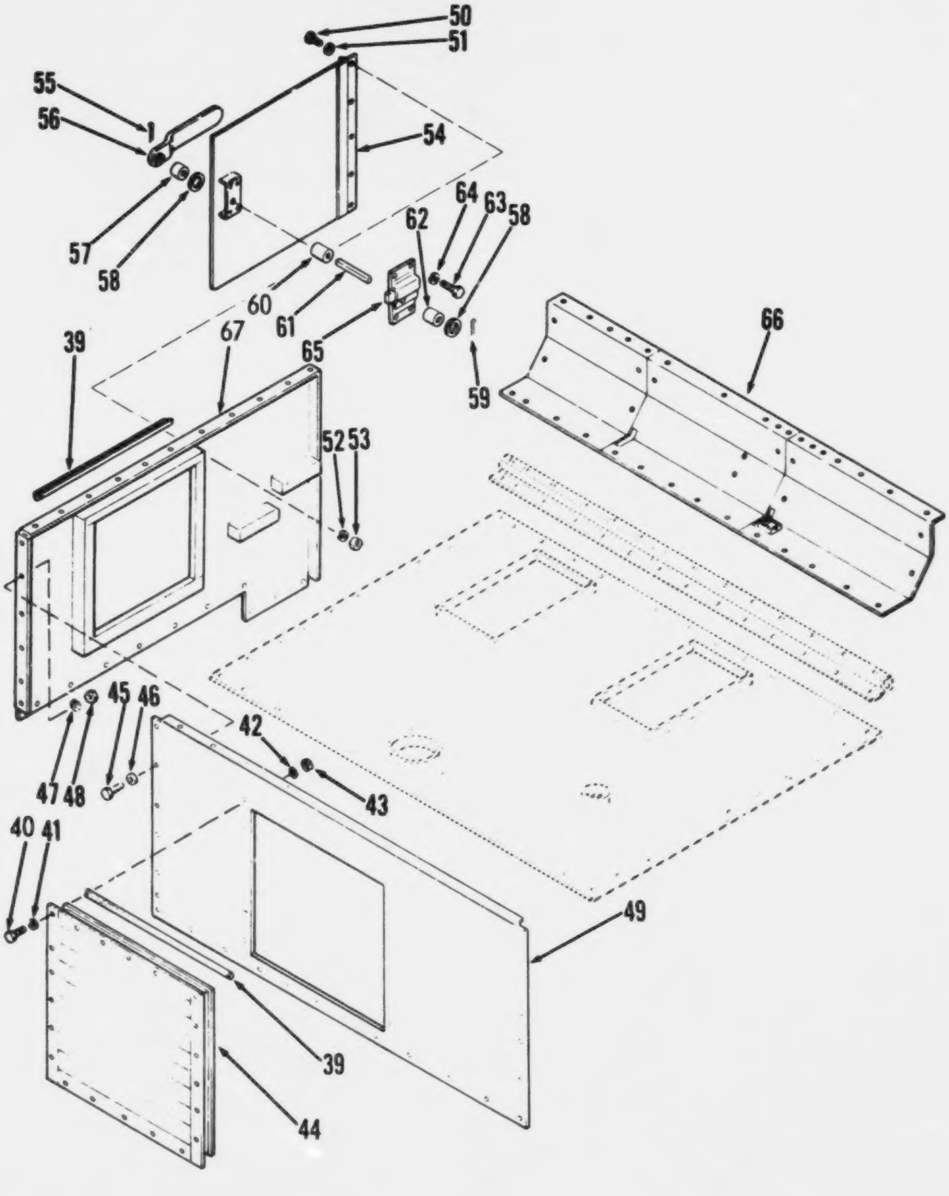

TA032857

Figure 17. Compartment assembly, engine (Sheet 2 of 2)

(1) ILLUSTRATION (a) FIG NO.	(b) ITEM NO.	(2) SMR CODE	(3) NATIONAL STOCK NUMBER	(4) PART NUMBER	(5) FSCM	(6) DESCRIPTION USABLE ON CODE	(7) U/M	(8) QTY INC IN UNIT
						FUNCTIONAL GROUP 09 ENGINE COMPARTMENT		
17		XBOOF		927J140	27315	COMPARTMENT,ASY CRANE ENGINE....................................	EA	1
17	1	XBOZZ	5305-00-269-3210	MS90725-59	96906	.SCREW,CAP HEXAGON 3-8-16X7-8 COVER...........................	EA	57
17	2	PAOZZ	5310-00-824-4562	RS80325MSC	73484	.WASHER,SEALING RUBBER COVER...................................	EA	57
17	3	PAOZZ	5310-00-637-9541	MS35338-46	96906	.WASHER,LOCK 3-8 COVER...	EA	57
17	4	XBOZZ	5310-00-732-0558	MS51967-8	96906	.NUT,PLAIN,HEXAGON 3-8-16 COVER................................	EA	57
17	5	XDOZZ		27J1837-1	27315	.COVER,ENGINE COMPARTMENT.......................................	EA	1
17	6	XDOZZ		20H168709	27315	.SCREW THUMB 3-8-16 RADIATOR COVER.............................	EA	2
17	7	XDOZZ		214P77	27315	..COVER ACCESS RADIATOR...	EA	1
17	8	PCOZZ	9330-00-401-3759	14H754	27315	..CHANNEL,RUBBER,ACCE ACCESS COVER SEAL.........................	EA	1
17	9	PAOZZ	4730-00-821-0251	56128	81646	.CLAMP,HOSE GANTRY LEG..	EA	2
17	10	PAOZZ	2530-01-041-4698	14U95	27315	..BOOT,GANTRY LEG................................	EA	2
17	11	XBOZZ	5340-01-030-9050	32P366	27315	.CLAMP,BOOT,GANTRY L GANTRY LEG.................................	EA	2
17	12	XBOZZ	5305-00-269-3214	MS90725-64	96906	..SCREW,CAP,HEXAGON 3-8 16X1 CAP HEX............................	EA	4
17	13	XBOZZ		20H161404	27315	..NUT,SELF LOCKING 3-8-16 SLF LOCKING...........................	EA	4
17	14	XBOZZ	5305-00-068-0500	MS90725-3	96906	..SCREW,CAP,HEX HD 1/4-20 X 1/2, COVER.......................	EA	3
17	15	PAOZZ	5310-00-582-5965	MS35338-44	96906	.WASHER,LOCK LOCK 1-4...	EA	3
17	16	XDOZZ		27P2620	27315	.COVER,CABLE CABLE BOOM HOIST...................................	EA	1
17	17	XDOZZ		27N2646	27315	.BAR,CONNECTING CONNECTING ENGINE...............................	EA	1
17	18	XBOZZ	5305-00-269-3210	MS90725-59	96906	.SCREW,CAP,HEXAGON CAP HEX 3-8-16X7/8...........................	EA	5
17	19	PAOZZ	5310-00-824-4562	RS80325MSC	73484	.WASHER,SEALING SEALING DOOR HINGE..............................	EA	5
17	20	PAOZZ	5310-00-637-9541	MS35338-46	96906	.WASHER,LOCK LOCK 3-8 DOOR......................................	EA	5
17	21	XBOZZ	5310-00-732-0558	MS51967-8	96906	.NUT,PLAIN,HEXAGON PLAIN HEX 3-8-16 DOOR........................	EA	5
17	22	XDOZZ		27N2682-1	27315	.DOOR,COMPARTMENT COMPARTMENT ENGINE............................	EA	1
17		PAOZZ	5340-01-030-9051	906R34-1	27315	..LATCH ASSY,DOORRH RH DOOR.....................................	EA	1
17	23	PAOZZ	5315-00-019-0777	MS24665-291	96906	...PIN,COTTER COTTER 3-32X1-3-4.................................	EA	1
17	24	XAOZZ		220P193	27315	...HANDLE,LATCH LATCH DOOR......................................	EA	1
17	25	XAOZZ		18TR65302	27315	...SPACER,SLEEVE SLEEVE SQUARE HOLE HANDLE......................	EA	1
17	26	XBOZZ	5310-01-052-6933	3631V008	27315	...WASHER,FLAT FLAT LATCH.......................................	EA	2
17	27	PAOZZ	5315-00-842-3044	MS24665-283	96906	...PIN,COTTER COTTER 3-32X3-4...................................	EA	1
17	28	XAOZZ		18TR65303	27315	...SPACER,SLEEVE SLEEVE SQUARE HOLE.............................	EA	1
17	29	XAOZZ		3-906N34	27315	...SHAFT,LATCH LATCH SQUARE 5-16X4..............................	EA	1
17	30	XAOZZ		18TR65301	27315	...SPACER,SLEEVE SLEEVE SQUARE HOLE.............................	EA	1
17	31	XBOZZ	5305-00-225-3838	MS90725-4	96906	...SCREW,CAP,HEXAGON CAP HEX 1-4-20X5-8.........................	EA	4
17	32	PAOZZ	5310-00-582-5965	MS35338-44	96906	...WASHER,LOCK LOCK 1-4...	EA	4
17	33	PAOZZ	2540-01-032-4654	48738	19220	...LATCH ASSY,DOORRH RH DOOR....................................	EA	1
17	34	XBOZZ	5305-00-269-3208	MS90725-57	96906	.SCREW,CAP,HEXAGON CAP HEX HD 3-8-16X5-8........................	EA	10
17	35	PAOZZ	5310-00-824-4562	RS-80325-MSC	73484	.WASHER,SEALING SEALING RIGHT PANEL.............................	EA	10
17	36	PAOZZ	5310-00-637-9541	MS35338-46	96906	.WASHER,LOCK LOCK 3-8...	EA	10
17	37	XBOZZ	5310-00-732-0558	MS51967-8	96906	.NUT,PLAIN,HEXAGON PLAIN HEX 3-8-16.............................	EA	10

(1) ILLUSTRATION (a) FIG NO.	(b) ITEM NO.	(2) SMR CODE	(3) NATIONAL STOCK NUMBER	(4) PART NUMBER	(5) FSCM	(6) DESCRIPTION USABLE ON CODE	(7) U/M	(8) QTY INC IN UNIT
17	38	XDOZZ		27J1384-1	27315	.PANEL,RIGHT RIGHT ENG COMPARTMENT.............................	EA	1
17	39	XDOZZ		27T1777	27315	.GUTTER,RAIN RAIN ENG COMPARTMENT..............................	EA	3
17	40	XBOZZ	5305-00-269-3210	MS90725-59	96906	.SCREW,CAP,HEXAGON CAP HEX 3-8-16X7-8..........................	EA	21
17	41	XBOZZ		18Z2075D1C	27315	.WASHER,SEALING SEALING..	EA	21
17	42	PAOZZ	5310-00-637-9541	MS35338-46	96906	.WASHER,LOCK LOCK 3-8..	EA	21
17	43	XBOZZ	5310-00-732-0558	MS51967-8	96906	.NUT,PLAIN,HEXAGON	EA	21
17	44	XDOZZ		12483	13644	SHUTTER,AIR ENG COMPARTMENT....................................	EA	1
17	45	XBOZZ	5305-00-269-3208	MS90725-57	96906	.SCREW,CAP,HEXAGON CAP HEX 3-8-16X7-8..........................	EA	19
17	46	XDOZZ	5310-01-031-4351	20Z2075D1C	27315	.WASHER,SEALING,PANE SEALING REAR PANEL........................	EA	1
17	47	PAOZZ	5310-00-637-9541	MS35338-46	96906	.WASHER,LOCK LOCK 3-8..	EA	19
17	48	XBOZZ	5310-00-732-0558	MS51967-8	96906	.NUT,PLAIN,HEXAGON PLAIN HEX 3-8-16............................	EA	19
17	49	XDOZZ		27J1386	27315	.PANEL,REAR ENG COMPARTMENT....................................	EA	1
17	50	XBOZZ	5305-00-269-3210	MS90725-59	96906	.SCREW,CAP,HEXAGON 3-8-16X7-8..................................	EA	5
17	51	PAOZZ	5310-00-824-4562	RS80325MSC	73484	.WASHER,SEALING,DOOR SEALING DOOR..............................	EA	5
17	52	PAOZZ	5310-00-637-9541	MS35338-46	96906	.WASHER,LOCK LOCK 3-8..	EA	5
17	53	XBOZZ	5310-00-732-0558	MS51967-8	96906	.NUT,PLAIN,HEXAGON 3-8-16......................................	EA	5
17	54	XDOZZ		27N2687-2	27315	.DOOR ASSY LEFT HAND...	EA	1
17		PAOZZ	2540-01-032-5602	906N34-2	27315	..LATCH ASSY,DOOR	EA	1
17	55	PAOZZ	5315-00-019-0777	MS24665-291	96906	...PIN,COTTER COTTER 3-32X1-3-4................................	EA	1
17	56	XDOZZ		220P193	27315	...HANDLE,LATCH DOOR LATCH.....................................	EA	1
17	57	XDOZZ		18T8653D2	27315	...SPACER,SLEEVE...	EA	1
17	58	XDOZZ	5310-01-053-6933	3631V008	27315	...WASHER,FLAT FLAT 3-8..	EA	2
17	59	PAOZZ	5315-00-842-3044	MS24665-283	96906	...PIN,COTTER COTTER 3-32X3-4..................................	EA	1
17	60	XDOZZ		18T8653D3	27315	...SPACER,SLEEVE	EA	1
17	61	XDOZZ		3-906N34	27315	...SHAFT,LATCH LATCH SQUARE 5-16X4.............................	EA	1
17	62	XDOZZ		18T8653D1	27315	...SPACER,SLEEVE	EA	1
17	63	XBOZZ	5305-00-225-3838	MS90725-4	96906	...SCREW,CAP,HEXAGON CAP HEX 1-4-20X5-8........................	EA	4
17	64	PAOZZ	5310-00-582-5965	MS35338-44	96906	...WASHER,LOCK LOCK 1-4..	EA	1
17	65	XDOZZ		4873L	19220	...LATCH ASSY LH DOOR..	EA	1
17	66	XBOZZ		27J1371	27315	.SUPPORT ENGINE COMPARTMENT....................................	EA	1
17	67	XBOZZ		27J1385-1	27315	.PANEL ENGINE LEFT SIDE..	EA	1

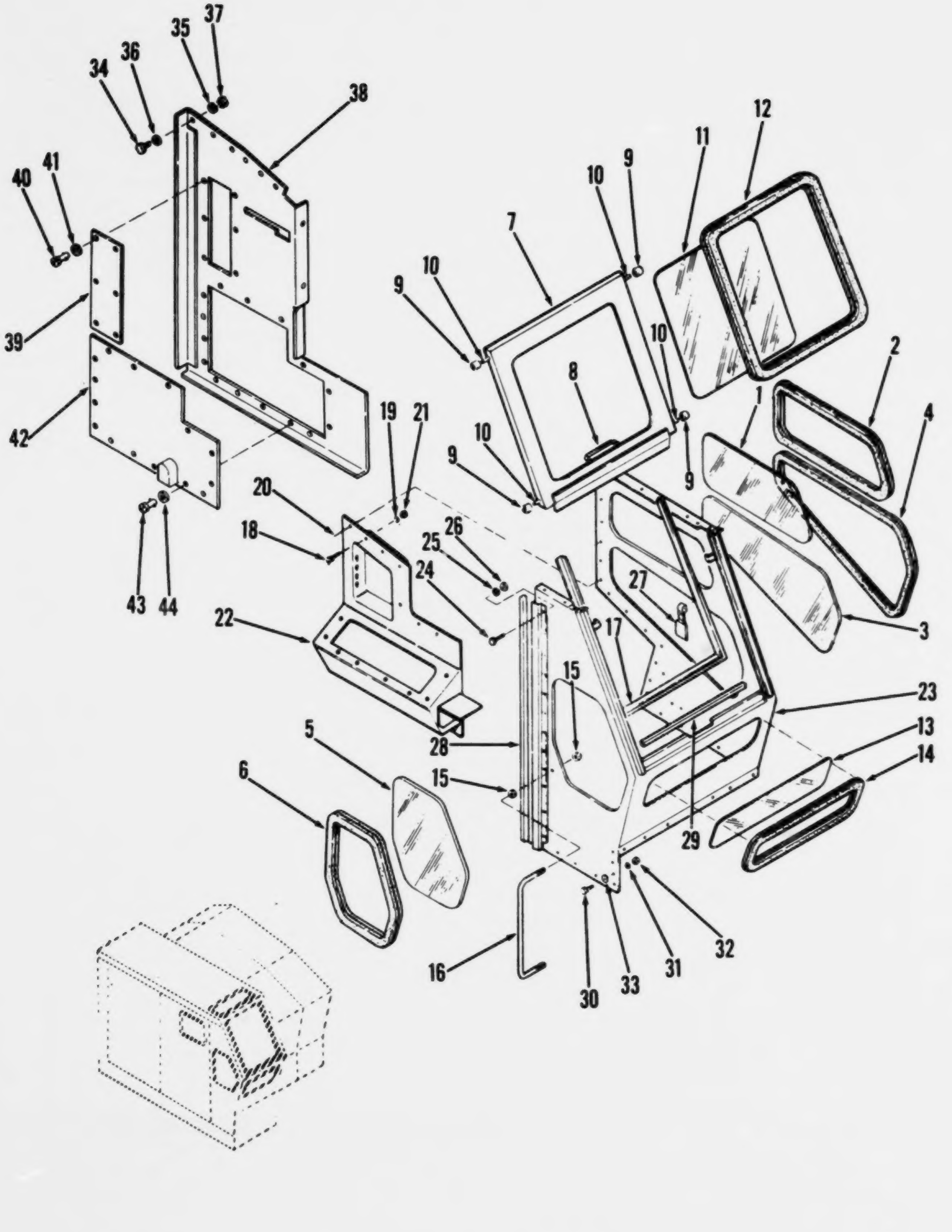

Figure 18. Cab assembly

(1) ILLUSTRATION (a) FIG NO.	(b) ITEM NO.	(2) SMR CODE	(3) NATIONAL STOCK NUMBER	(4) PART NUMBER	(5) FSCM	(6) DESCRIPTION USABLE ON CODE	(7) U/M	(8) QTY INC IN UNIT
						FUNCTIONAL GROUP 10 CAB,HOUSE CRANE		
18		XDOOF		927J142	27315	CAB ASSY,FRONT CRANE..	EA	1
18	1	XDOZZ		27062	27315	.GLASS,SAFETY SAFETY LH TOP....................................	EA	1
18	2	XDOZZ		27Z40608	27315	.WEATHER STRIP RUBBER LH TOP WINDOW...........................	EA	1
18	3	XDOZZ		27060	27315	.GLASS,SAFETY SAFETY LH BOTTOM................................	EA	1
18	4	XDOZZ		27Z40607	27315	.WEATHER STRIP RUBBER LH BOTTOM WINDOW........................	EA	1
18	5	XDOZZ		27061	27315	.GLASS,SAFETY SAFETY RH FRONT.................................	EA	1
18	7	PCOZZ	9390-00-401-3765	27Z40601	27315	.NONMETALLIC SPECIAL RUBBER RH FRONT......W..................	EA	1
18	7	PAOZZ	2510-01-027-7975	27N2645	27315	.WINDSHIELD,ASSEMBLY SLIDING FRONT............................	EA	1
18	8	XDOZZ		227T208	27315	..HANDLE,WINDOW WINDOW SLIDING................................	EA	1
18	9	XDOZZ		13T271	27315	..ROLLER,WINDOW WINDOW SLIDING................................	EA	4
18	10	XDOZZ		19T2958	27315	..PIN,ROLLER ROLLER SLIDING WINDOW............................	EA	4
18	11	PAOZZ	2510-00-764-7972	27Z40704	27315	.GLASS,SAFETY SAFETY SLIDING WINDOW...........................	EA	1
18	12	PCOZZ	9390-00-307-9644	27Z40604	27315	.NONMETALLIC SPECIAL RUBBER SLIDING WINDOW....................	EA	1
18	13	PAOZZ	2510-00-764-7943	27Z40701	27315	.GLASS,SAFETY SAFETY FRONT LOWER..............................	EA	1
18	14	PCOZZ	9390-00-401-3765	27Z40601	27315	.NONMETALLIC SPECIAL RUBBER FRONT LOWER...NDOW................	EA	1
18	15	PAOZZ	5310-00-768-0318	MS51967-14	96906	.NUT,PLAIN,HEXAG 1-2-13 HANDLE................................	EA	4
18	16	XBOFF		227T225	27315	.HANDLE SAFETY CRANE CAB......................................	EA	1
18	17	XBOZZ		27Z40501	27315	.SEAL,RUBBER: WINDOW, 9 FT,6 IN...............................	EA	1
18	18	XDOZZ	5305-00-942-2196	MS18154-60	96906	.SCREW,CAP,HEXAGON 3-8-16X1 CONTROL BOX.......................	EA	8
18	19	XDOZZ	5310-00-637-9541	MS35338-46	96906	.WASHER,LOCK 3-8 CONTROL......................................	EA	8
18	20	PAOZZ	5310-00-824-4542	RSBC325MSC	73484	.WASHER,SEALING CONTROL BOX...................................	EA	8
18	21	XDOZZ	5310-00-732-0558	MS51967-8	96906	.NUT,PLAIN,HEXAG 3-8-16 CONTROL BOX...........................	EA	8
18	22	XDOZZ		14J1217	27315	.BOX CONTROL CRANE CAB..	EA	1
18	23	XDOFF		27J1377	27315	.CAB OPERATORS CRANE..	EA	1
18	24	XBOZZ		MS90725-6	96906	..SCREW,CAP,HEX HD: 1/4-20 X 3/4, CAB.........................	EA	13
18	25	XDOZZ	5310-00-582-5965	MS35338-44	96906	..WASHER,LOCK 1-4 CAB...	EA	13
18	26	XDOZZ	5310-00-761-6892	MS51967-2	96906	..NUT,PLAIN,HEXAG 1-4-20 CAB..................................	EA	13
18	27	XDOZZ		37L11-18	71286	..LATCH TENSION CAB TOP.......................................	EA	5
18	28	PCOZZ	9390-00-401-3848	27Z41001	27315	..NONMETALLIC SPECIAL CAB.....................................	EA	1
18	29	PCOZZ	9390-00-401-3797	27Z40801	27315	..NONMETALLIC SPECIAL CAB.....................................	EA	1
18	30	XBOZZ	5305-00-942-2196	MS18154-60	96906	.SCREW,CAP,HEXAGON 3/8-16X1 CAB...............................	EA	30
18	31	XBOZZ	5310-00-637-9541	MS35338-46	96906	.WASHER,LOCK 3/8 CAB..	EA	30
18	32	XBOZZ	5310-00-824-4542	RSBC325MSC	73484	.WASHER SEALING CAB...	EA	30
18	33	XBOZZ	5310-00-732-0558	MS51967-8	96906	.NUT,PLAIN,HEXAGON 3/8-16 CAB.................................	EA	30
18	34	XBOZZ	5305-00-942-2196	MS18154-60	96906	.SCREW,CAP,HEXAGON 3/8-16X1 PANEL.............................	EA	10
18	35	XBOZZ	5310-00-637-9541	MS35338-46	96906	.WASHER,LOCK 3/8 PANEL..	EA	10
18	36	XBOZZ	5310-00-824-4542	RSBO325MSC	73484	.WASHER SEALING PANEL...	EA	10
18	37	XBOZZ	5310-00-732-0558	MS51967-8	96906	.NUT,PLAIN,HEXAGON 3/8-16 PANEL...............................	EA	10

(1) ILLUSTRATION (a) FIG NO.	(b) ITEM NO.	(2) SMR CODE	(3) NATIONAL STOCK NUMBER	(4) PART NUMBER	(5) FSCM	(6) DESCRIPTION USABLE ON CODE	(7) U/M	(8) QTY INC IN UNIT
18	38	XDOFF		27J1390	27315	.PANEL COVER OPERATORS COMPARTMENT LEFT..........	EA	1
18	39	XDOZZ		223T231F1	27315	..COVER PANEL OPERATORS..........	EA	1
18	40	XBOZZ	5325-00-489-1066	AJ6-50	72794	..STUD TURNLOCK FASTE PANEL COVER..........	EA	6
18	41	PAOZZ	5325-00-435-2168	GP6	72794	..PLASTIC HALF GROMME COVER..........	EA	6
18	42	XDOZZ		227P270F1	27315	..COVER PANEL OPERATOR..........	EA	1
18	43	XBOZZ	5325-00-489-1066	AJ6-50	72794	...STUD TURNLOCK FASTE COVER..........	EA	15
		PAOZZ	5325-00-435-2168	GP6	72794	...PLASTIC HALF GROMME COVER..........	EA	1

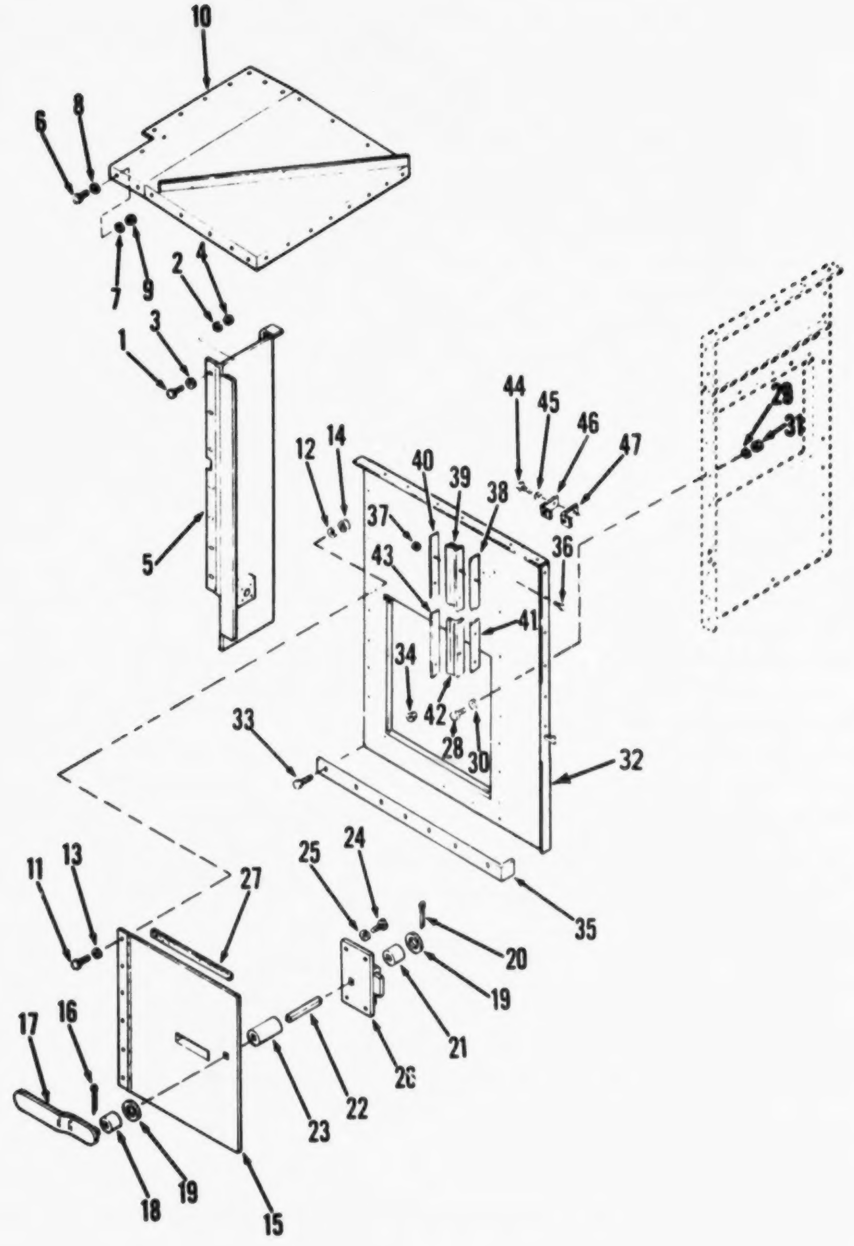

Figure 19. Cab assembly (Sheet 1 of 2)

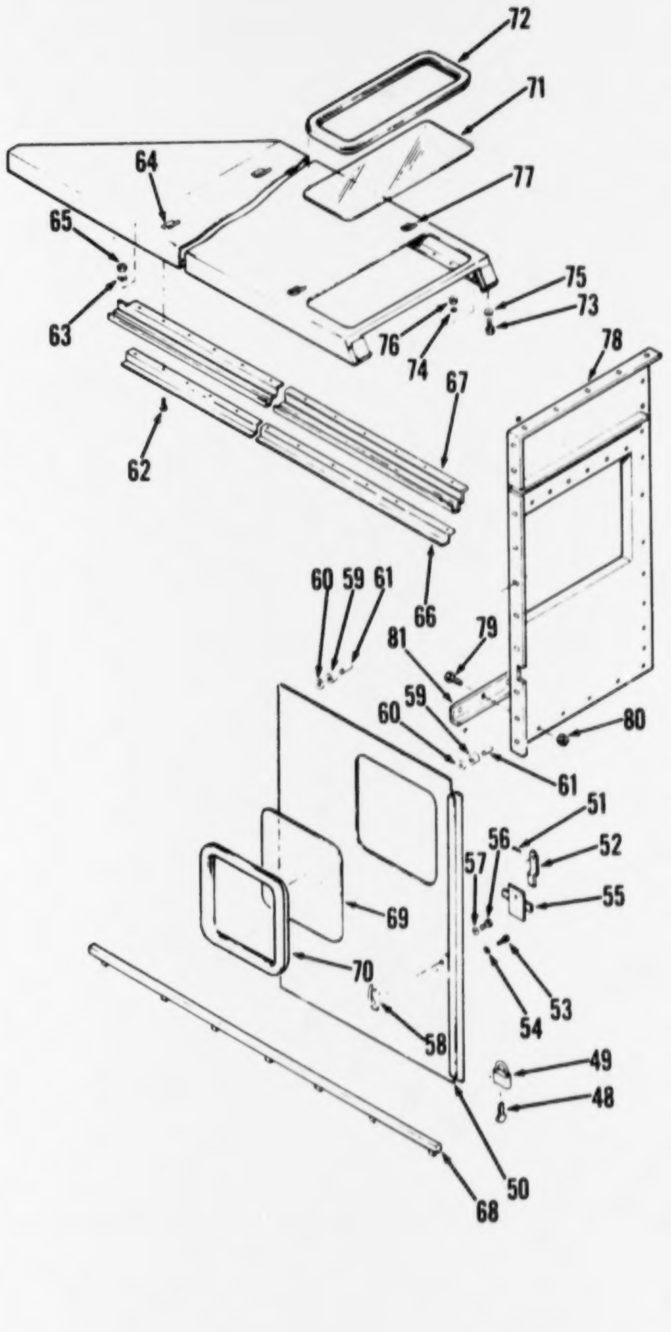

TA032660

Figure 19. Cab assembly (Sheet 2 of 2)

(1) ILLUSTRATION (a) FIG NO.	(b) ITEM NO.	(2) SMR CODE	(3) NATIONAL STOCK NUMBER	(4) PART NUMBER	(5) FSCM	(6) DESCRIPTION USABLE ON CODE	(7) U/M	(8) QTY INC IN UNIT
						FUNCTIONAL GROUP 10 CAB,HOUSE CRANE		
19	1	XBOZZ		MS90725-40	96906	..SCREW,CAP,HEX HD 3/8-16 X 1,PANEL..........................	EA	19
19	2	XBOZZ		MS35338-46	96906	..WASHER,LOCK 3/8,PANEL..........................	EA	19
19	3	XBOZZ		RS80325MSC	73484	..WASHER,SEALING PANEL..........................	EA	19
19	4	XBOZZ		MS51967-8	96906	..NUT,PLAIN,HEX. 3/8-16,PANEL..........................	EA	19
19	5	XBOFF		27J1360-1	27315	.PANEL RH REAR CAB..........................	EA	1
19	6	XBOZZ	5305-00-942-2196	MS18154-60	96906	.SCREW,CAP,HEXAGON 3-8-16X1 PANEL..........................	EA	8
19	7	XBOZZ	5310-00-637-9541	MS35338-46	96906	.WASHER,LOCK 3-8 PANEL..........................	EA	8
19	8	PAOZZ	5310-00-924-4542	RS80325MSC	73484	.WASHER,SEALING PANEL..........................	EA	8
19	9	PAOZZ	5310-00-732-0558	MS51967-8	96906	.NUT, PLAIN HEX 3/8-16 PANEL..........................	EA	14
19	10	XBOFF		27J1359	27315	.PANEL TOP RH CAB..........................	EA	1
19	11	XBOZZ	5305-00-942-2196	MS18154-60	96906	.SCREW,CAP,HEXAGON 3/8-16X1 DOOR..........................	EA	6
19	12	XBOZZ	5310-00-637-9541	MS35338-46	96906	.WASHER,LOCK 3/8 DOOR..........................	EA	6
19	13	PAOZZ	5310-00-924-4542	RS80325MSC	73484	.WASHER SEALING DOOR..........................	EA	6
19	14	XBOZZ	5310-00-732-0558	MS51967-8	96906	.NUT,PLAIN,HEXAGON 3/8-16 DOOR..........................	EA	6
19	15	XBOOO		227N233F1	27315	.DOOR ASSY RH CRANE CAB..........................	EA	1
19		XDOZZ	2540-01-032-5602	906N34-2	27315	..LATCH ASSY CRANE DOOR..........................	EA	1
19	16	PAOZZ	5315-00-019-0777	MS24665-291	96906	...PIN,COTTER 3-32X1-3-4 HANDLE..........................	EA	1
19	17	XDOZZ		220P193	27315	...HANDLE LATCH DOOR..........................	EA	1
19	18	XDOZZ		19T865302	27315	...SPACER SLEEVE SQUARE HOLE HANDLE..........................	EA	1
19	19	XBOZZ	5310-01-353-6933	3631VC08	27315	...WASHER,FLAT LATCH..........................	EA	2
19	20	XBOZZ	5315-00-962-3044	MS24665-283	96906	...PIN,COTTER 3/32X3/4 HANDLE..........................	EA	1
19	21	XAOZZ		19T865301	27315	...SPACER SLEEVE SQUARE HOLE HANDLE..........................	EA	1
19	22	XAOZZ		1-906534	27315	...SHAFT LATCH SQUARE 5/16X4..........................	EA	1
19	23	XAOZZ		19T865303	27315	...SPACER SLEEVE SQUARE HOLE LATCH..........................	EA	1
19	24	XBOZZ	5305-00-225-3838	MS90725-6	96906	...SCREW,CAP,HEXAGON 1/4-20X5/8 LATCH..........................	EA	4
19	25	XBOZZ	5310-00-582-5965	MS35338-44	96906	...WASHER,LOCK 1/4 LATCH..........................	EA	4
19	26	XDOZZ	2540-01-032-4654	48738	19220	...LATCH ASSEMBLY DOOR..........................	EA	1
19	27	XDOZZ		278672	27315	...SEAL,DOOR,84 IN..........................	EA	1
19	28	XBOZZ	5305-00-942-2196	MS18154-60	96906	.SCREW,CAP,HEXAGON 3/8-16X1 PANEL..........................	EA	28
19	29	XBOZZ	5310-00-637-9541	MS35338-46	96906	.WASHER,LOCK 3/8 PANEL..........................	EA	28
19	30	XBOZZ	5310-00-924-4542	RS80325MSC	73484	.WASHER SEALING PANEL..........................	EA	28
19	31	XBOZZ	5310-00-732-0558	MS51967-8	96906	.NUT,PLAIN,HEXAGON 3/8-16 PANEL..........................	EA	28
19	32	XBOFF		27J1388	27315	.PANEL RH REAR CAB..........................	EA	1
19	33	XBOZZ	5305-00-269-3213	MS90725-62	96906	..SCREW,CAP,HEXAGON 3/8-16X1-1/8 STRIP..........................	EA	7
19	34	XBOZZ	5310-00-087-4652	MS51922-17	96906	..NUT,SELF-LOCKING 3/8-16 STRIP..........................	EA	7
19	35	XDOZZ		27R2712	27315	..PLATE MOUNTING PANEL..........................	EA	1

(1) ILLUSTRATION (a) FIG NO.	(b) ITEM NO.	(2) SMR CODE	(3) NATIONAL STOCK NUMBER	(4) PART NUMBER	(5) FSCM	(6) DESCRIPTION USABLE ON CODE	(7) U/M	(8) QTY INC IN UNIT
19	36	XBOZZ	5305-00-984-6212	MS35206-266	96906	..SCREW,MACHINE 10-24X78 BONDING STRIP	EA	14
19	37	XBOZZ	5310-00-208-1918	AN365-1024A	88044	..NUT,SELF-LOCKING 10-24 BONDING STRIP	EA	14
19	38	XDOZZ		27T1781	27315	..SHIM STRIP PANEL	EA	1
19	39	XBOZZ		32047202	27315	..STRIP BONDING PANEL UPPER	EA	1
19	40	XDOZZ		27T1779	27315	..STRIP SUPPORT MTG PLATE	EA	1
19	41	XDOZZ		27T1780	27315	..SHIM STRIP PANEL	EA	1
19	42	XBOZZ		32047201	27315	..STRIP BONDING PANEL LOWER	EA	1
19	43	XBOZZ		27T1778	27315	..STRAP SUPPORT STRIP	EA	1
19	44	XBOZZ		MS35206-263	96906	.SCREW,MACHINE 10-24 X 1/2,STRIP		
19	45	XBOZZ	5310-00-045-3296	MS35338-43	96906	.WASHER,LOCK NO. 10 STRIP	EA	3
19	46	XBOZZ		22T7222	27315	.STRIP BONDING PANEL	EA	1
19	47	PCOZZ	5330-00-763-0060	2071170	27315	.SEAL,RUBBER STRIP REINFORCING STRIP	EA	1
19		XDOZZ	5340-00-682-1506	MS21313-32	96906	.LOCK ASSEMBLY CRANE DOOR	EA	4
19	48	XAOZZ		374	38797	..KEY LOCK DOOR	EA	1
19	49	PAOZZ	5340-00-682-1506	MS21313-32	96906	..PADLOCK SET DOOR	EA	1
19	50	XDOZZ		27N2643	27315	.DOOR SLIDING CRANE CAB	EA	1
19		XDOZZ		290AP1F1	27315	..LATCH ASSEMBLY SLIDING	EA	1
19	51	XBOZZ	5315-00-019-0777	MS24665-291	96906	...PIN,COTTER 3-32X1-3-4 HANDLE	EA	1
19	52	XAOZZ		220P193	27315	...HANDLE LATCH SLIDING DOOR	EA	1
19	53	XBOZZ		MS90726-3	96906	...SCREW,CAP,HEX HD. 1/4-28 X 1/2,LATCH	EA	4
19	54	XBOZZ	5310-00-582-5965	MS35338-44	96906	...WASHER,LOCK 1-4 LATCH	EA	4
19	55	XDOZZ		5888	19220	...LATCH DOOR SLIDING	EA	1
19	56	XBOZZ	5305-00-989-7435	MS35207-264	96906	...SCREW,MACHINE 10 32X5-8 HANDLE	EA	2
19	57	XBOZZ	5310-00-045-3296	MS35338-43	96906	...WASHER,LOCK NUMBER 10 HANDLE	EA	2
19	58	XAOZZ		62326	27315	...HANDLE LATCH SLIDING DOOR	EA	1
19	59	PAOZZ	3110-00-967-8632	411-34	43766	...BEARING BALL SLIDING DOOR	EA	2
19	60	XBOZZ		19T2563	27315	...WASHER BEARING SLIDING DOOR	EA	2
19	61	XBOZZ		19T2409	27315	...PIN BEARING SLIDING DOOR	EA	2
19	62	XBOZZ	5305-00-942-2196	MS18154-60	96906	.SCREW,CAP,HEXAGON 3-8-16X1 PANEL	EA	13
19	63	XBOZZ	5310-00-637-9541	MS35338-46	96906	.WASHER,LOCK 3-8 PANEL	EA	13
19	64	XBOZZ	5310-00-924-4542	RS8C325MSC	73484	.WASHER SEALING PANEL	EA	13
19	65	XBOZZ	5310-00-732-0558	MS51967-8	96906	.NUT,PLAIN,HEXAG 3-8-16 PANEL	EA	13
19	66	XDOZZ		27P2702	27315	.GUIDE DOOR SLIDING	EA	1
19	67	XDOZZ		27P2701	27315	.GUTTER RAIN RH SIDE	EA	1
19	68	XDOZZ		27P2703	27315	.GUIDE DOOR SLIDING OUTER	EA	1
19	69	PAOZZ	2510-00-764-7918	27Z40703	27315	.GLASS,SAFETY SAFETY RH REAR	EA	1
19	70	PCOZZ	9390-00-350-8215	27Z40603	27315	.NONMETTALIC SPECIAL RUBBER RH REAR WINDOW	EA	1
19	71	XDOZZ	2510-00-764-7943	27Z40701	27315	.GLASS,SAFETY GLASS,SAFETY,CRANE TOP	EA	1
19	72	PCOZZ	9390-00-401-3765	27Z40601	27315	.NONMETALLIC SPECIAL WEATHERSTRIP,GLASS	EA	1

(1) ILLUSTRATION (a) FIG NO.	(b) ITEM NO.	(2) SMR CODE	(3) NATIONAL STOCK NUMBER	(4) PART NUMBER	(5) FSCM	(6) DESCRIPTION USABLE ON CODE	(7) U/M	(8) QTY INC IN UNIT
19	73	PAOZZ	5305-00-942-2196	MS18154-60	96906	.SCREW,CAP SCREW,CAP,HEX HD 3/8-16X1	EA	17
19	74	PAOZZ	5310-00-004-5033	MS35338-46	96906	.WASHER,LOCK WASHER,LOCK 318,CANOPY	EA	17
19	75	PAOOO	5310-00-824-4542	R580325MSC	73494	.WASHER,SEALING WASHER,SEALING,CANOPY	EA	17
19	76	PAOZZ	5310-00-732-0558	MS51967-8	96906	.NUT,PLAIN NUT,PLAIN,HEXAGON,318-16,CANOPY	EA	17
19	77	XBOZZ	3810-01-073-8390	27J1375	27315	.PANEL TOP RH CAB	EA	1
19	78	XBOFF		27J1839	27315	.PANEL:REAR TO CAB ASSEMBLY	EA	1
19	79	PAOZZ	5305-00-269-3212	MS90725-61	96906	..SCREW,CAP HEX HD: 318-16 X 1-1/8, PLATE,OUNTING	EA	6
19	80	PAOZZ	5310-00-087-4652	MS51922-17	96906	..NUT,SELF-LOCKING	EA	6
19	81	XDOZZ		27P2715	27315	..PLATE: MOUNTING PANE,REAR CAB ASSEMBLY	EA	1

AMC FORM 1779, 1 OCT 73 (REPLACES AMC TEST FORMS 1753 AND 1754, 8 APR 70, WHICH WILL BE USED UNTIL 1 JUL 74) REPAIR PARTS LIST

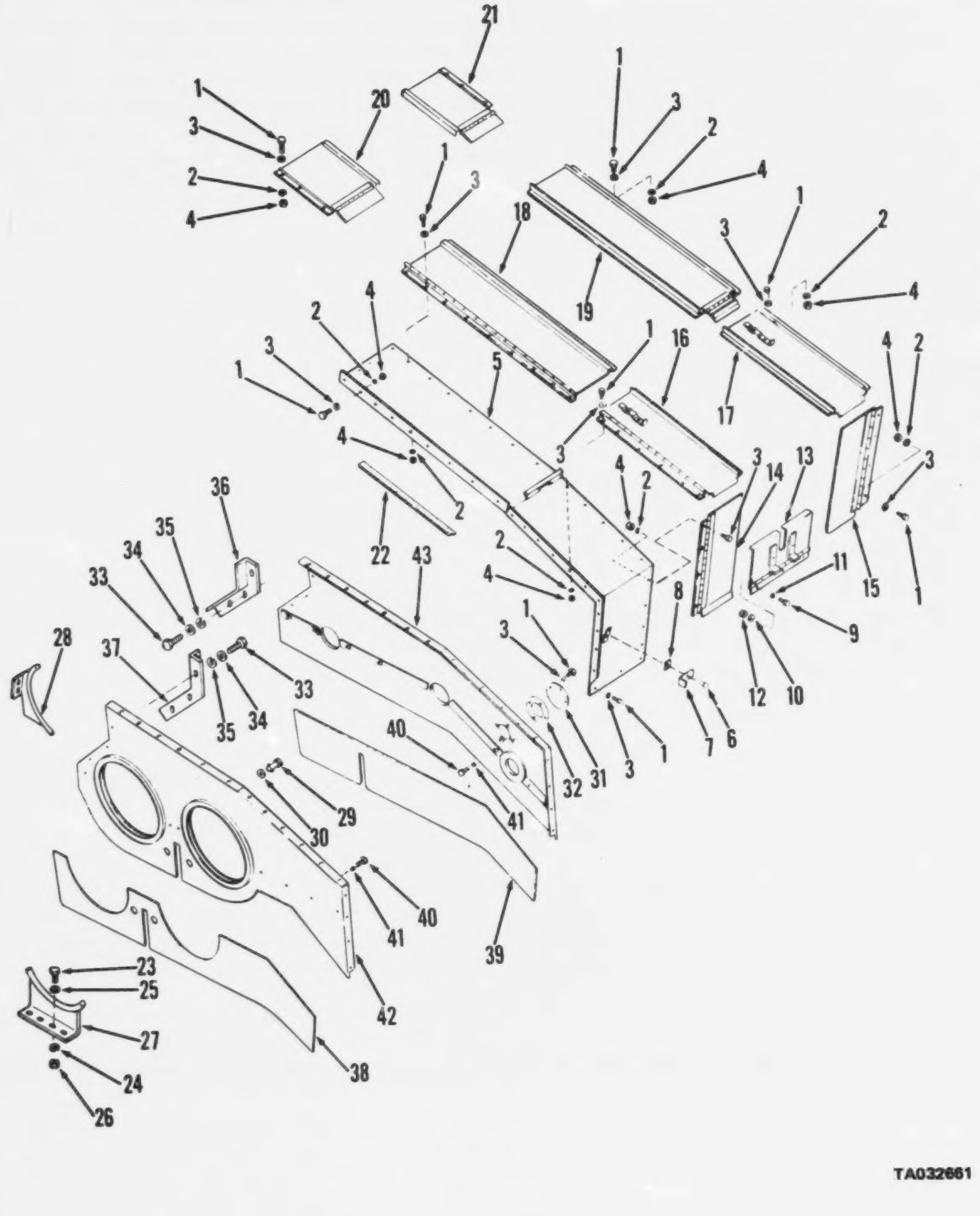

Figure 20. Cab assembly

(1) ILLUSTRATION (a) FIG NO.	(b) ITEM NO.	(2) SMR CODE	(3) NATIONAL STOCK NUMBER	(4) PART NUMBER	(5) FSCM	(6) DESCRIPTION USABLE ON CODE	(7) U/M	(8) QTY INC IN UNIT
						FUNCTIONAL GROUP 10 CAB, HOUSE CRANE		
20	1	XBOZZ	5305-00-942-2196 1	MS18154-60	96906	.SCREW,CAP HEXAGON 3-8-16X1 TOP PANEL........................	EA	32
20	2	XBOZZ	5310-00-637-9541	MS35338-46	96906	.WASHER,LOCK 3-8 TOP PANEL..................................	EA	32
20	3	XBOZZ	5310-00-824-4542	RS80325MSC	73484	.WASHER,SEALING TOP PANEL...................................	EA	32
20	4	XBOZZ	5310-00-732-0558	MS51967-8	96906	.NUT,PLAIN HEXAGON 3-8-16 TOP PANEL.........................	EA	32
20	5	XBOFF		27J1376	27315	.PANEL,TOP RIGHT SIDE.......................................	EA	1
20	6	XDOZZ		6-27J1376	27315	..RIVET,TUBULAR 31X62 LG LATCH..............................	EA	1
20	7	XDOZZ		206T195	27315	..LATCH,PANEL TOP...	EA	1
20	8	XDOZZ		220T386	27315	..SHIM,LATCH TOP PANEL......................................	EA	1
20	9	XBOZZ	5305-00-942-2196 1	MS18154-60	96906	.SCREW,CAP HEXAGON 3-8-16X1 BOTTOM COVER.....................	EA	3
20	10	XBOZZ	5310-00-637-9541	MS35338-46	96906	.WASHER,LOCK 3-8 BOTTOM COVER...............................	EA	3
20	11	XBOZZ	5310-00-824-4542	RS80325MSC	73484	.WASHER,SEALING BOTTOM COVER................................	EA	3
20	12	XBOZZ	5310-00-732-0558	MS51967-8	96906	.NUT,PLAIN HEXAGON 3-8-16 BOTTOM COVER......................	EA	3
20	18	XBOFF		27J1373	27315	.COVER,TOP RH CENTER..	EA	1
20	19	XBOFF		27J1374	27315	.COVER,TOP LH CENTER..	EA	1
20	20	XBOZZ		27N2678	27315	.COVER,TOP RH REAR..	EA	1
20	21	XBOZZ		27N2679	27315	.COVER,TOP LH REAR..	EA	1
20	22	XDOZZ		27Z674	27315	.FELT STRIP RH PANEL..	EA	1
20	23	XDOZZ	5305-00-942-2196 1	MS18154-60	96906	.SCREW,CAP HEXAGON 3-8-16X1 CABLE GUARD.....................	EA	4
20	24	XBOZZ		MS35338-46	96906	.WASHER,LOCK 3-8, GUARD.....................................	EA	4
20	25	PAOZZ	5310-00-824-4542	RS803325MSC	73484	.WASHER,SEALING CABLE GUARD.................................	EA	4
20	26	XDOZZ	5310-00-732-0558	MS51967-8	96906	.NUT,PLAIN HEXAGON 3-8-16 CABLE GUARD.......................	EA	4
20	27	XBOZZ		214N41	27315	.GUARD WIRE ROPE FRONT DRUM.................................	EA	1
20	28	XBOZZ		14N211	27315	.GUARD WIRE ROPE REAR DRUM..................................	EA	1
20		XDOFF		927J139F1	27315	.ENCLOSURE CAB CRANE..	EA	1
20	29	PAOZZ	5325-00-489-1067	AJ6-60	72794	..STUD TURNLOCK FASTE FASTENER COVER.........................	EA	4
20	30	PAOZZ	5325-00-435-2168	GP6	72794	..PLASTIC HALF GROMME COVER..................................	EA	4
20	31	XDOZZ		227T220	27315	..COVER,SIDE CAB..	EA	1
20	32	PAOZZ	5330-00-454-0535	227T219	27315	..GASKET SIDE PANEL...	EA	1
20	33	XDOZZ	5305-00-269-3209	MS90725-58	96906	..SCREW,CAP,HEXAGON 3-8-16X3-4 REAR PANEL....................	EA	6
20	34	XDOZZ	5310-00-637-9541	MS35338-46	96906	..WASHER,LOCK 3-8 REAR PANEL.................................	EA	6
20	35	XDOZZ	5310-00-087-7493	MS27183-13	96906	..WASHER,FLAT 3-8 REAR PANEL.................................	EA	6
20	36	XDOZZ		27P2704D1	27315	..PANEL REAR CAB ENCLOSURE LEFT HAND........................	EA	1
20	37	XDOZZ		27P2704D2	27315	..PANEL REAR RIGHT HAND CAB ENCLOSURE........................	EA	1
20	38	XDOZZ		227P247	27315	..PLATE SIDE LEFT HAND CAB ENCLOSURE.........................	EA	1
20	39	XDOZZ		227P248	27315	..PLATE SIDE,CAB ENCLOSURE,LEFT HAND.........................	EA	1
20	40	XDOZZ	5305-00-269-3209	MS90725-58	96906	..SCREW,CAP,HEXAGON 3-8-16X3-4 ENCLOSURE.....................	EA	14
20	41	XDOZZ	5310-00-637-9541	MS35338-46	96906	..WASHER,LOCK 3-8 ENCLOSURE..................................	EA	14
20	42	XDOFF		27J1381	27315	..ENCLOSURE CAB CRANE RIGHT HAND.............................	EA	1
20	43	XDOFF		27J1380	27315	..ENCLOSURE CAB CRANE LEFT HAND..............................	EA	1

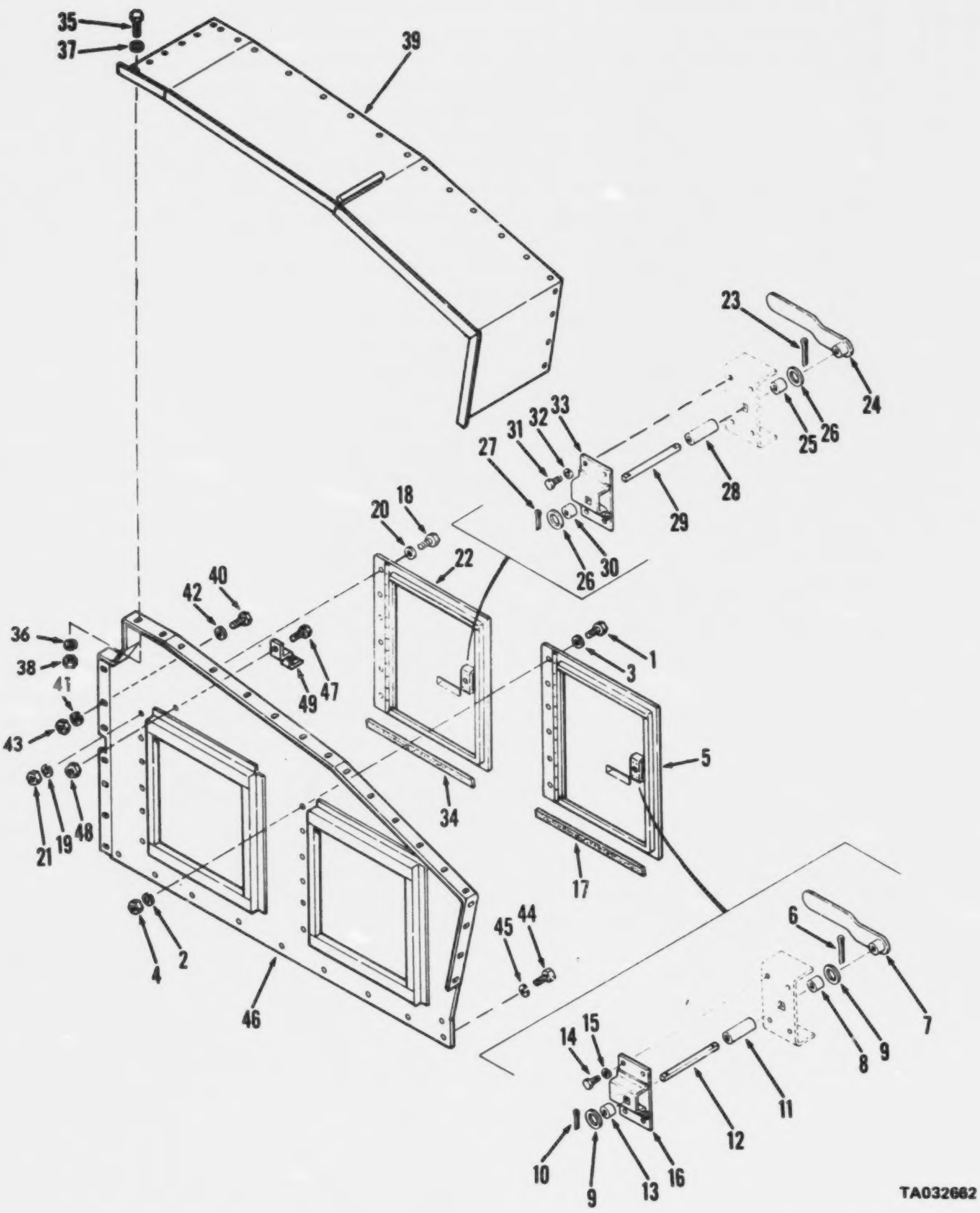

Figure 21. Cab assembly

(1) ILLUSTRATION (a) FIG NO.	(b) ITEM NO.	(2) SMR CODE	(3) NATIONAL STOCK NUMBER	(4) PART NUMBER	(5) FSCM	(6) DESCRIPTION USABLE ON CODE	(7) U/M	(8) QTY INC IN UNIT
						FUNCTIONAL GROUP 10 CAB,HOUSE CRANE		
21	1	XBOZZ	5305-00-942-2196	MS18154-60	96906	.SCREW,CAP,HEXAGON 3/8-16-60 DOOR	EA	6
21	2	XBOZZ	5310-00-637-9541	MS35338-46	96906	.WASHER,LOCK 3/8 DOOR	EA	6
21	3	XBOZZ	5310-00-824-4542	RS80325MSC	73484	.WASHER SEALING DOOR	EA	6
21	4	XBOZZ	5310-00-732-0558	MS51967-8	96906	.NUT,PLAIN,HEXAGON 3/8-16 DOOR	EA	6
21	5	XBOFF		27N2648D1	27315	.DOOR RH SIDE CAB	EA	1
21		XDOZZ	5340-01-030-9051	906N34-1	27315	.LATCH ASSEMBLY DOOR	EA	1
21	6	PAOZZ	5315-00-019-0777	MS24665-291	96906	...PIN,COTTER 3/32X1-1/4 HANDLE	EA	1
21	7	XDOZZ		220P193	27315	...HANDLE LATCH DOOR	EA	1
21	8	XAOZZ		18T8653D2	27315	...SPACER SLEEVE SQUARE HOLE HANDLE	EA	1
21	9	XBOZZ	5310-01-053-6933	3631V008	27315	...WASHER,FLAT LATCH	EA	2
21	10	PAOZZ	5315-00-842-3044	MS24665-283	96906	...PIN,COTTER 3/32X3/4 HANDLE	EA	1
21	11	XAOZZ		18T8653D3	27315	...SPACER SLEEVE SQUARE HOLE LATCH	EA	1
21	12	XAOZZ		3-906N34	27315	...SHAFT LATCH SQUARE 5/16X4 LATCH	EA	1
21	13	XAOZZ		18T8653D1	27315	...SPACER SLEEVE SQUARE HOLE HANDLE	EA	1
21	14	XBOZZ	5305-00-225-3838	MS90725-4	96906	...SCREW,CAP,HEXAGON 1/4-20X5/8 LATCH	EA	4
21	15	XBOZZ	5310-00-582-5965	MS35338-44	96906	...WASHER,LOCK 1/4 LATCH	EA	4
21	16	XDOZZ	2540-01-032-4654	48738	19220	...LATCH ASSEMBLY DOOR	EA	1
21	17	XBOZZ		27Z672D3	27315	..SEAL DOOR CAB	EA	1
21	19	PAOZZ	5310-00-004-5033	MS35338-46	96906	.WASHER, LOCK	EA	6
21	19	PAOZZ	5310-00-824-4542	RS80325MSC	73484	.WASHER, SEALING CRANE DOOR	EA	6
21	21	PAOZZ	5310-00-732-0558	MS51967-8	96906	.NUT,PLAIN HEX 3/8-16 CRANE DOOR	EA	6
21	22	XBOFF		27N2647	27315	.DOOR REAR CRANE	EA	1
21		XBOFF	5340-01-030-9051	906N34-1	27315	..LATCH ASSEMBLY DOOR	EA	1
21	23	PAOZZ	5315-00-019-0777	MS24665-291	96906	...PIN,COTTER 3/32X1-1/4 HANDLE	EA	1
21	24	XDOZZ		220P193	27315	...HANDLE LATCH DOOR	EA	1
21	25	XAOZZ		18T8653D2	27315	....SPACER, SLEEVE	EA	1
21	26	XBOZZ	5310-01-053-6933	3631V008	27315	...WASHER,FLAT LATCH	EA	2
21	27	XBOZZ	5315-00-842-3044	MS24665-283	96906	...PIN,COTTER 3/32X3/4 LATCH	EA	1
21	28	XAOZZ		18T8653D3	27315	...SPACER SLEEVE SQUARE HOLE LATCH	EA	1
21	29	XAOZZ		1-906N34	27315	...SHAFT LATCH SQUARE 5/16X4	EA	1
21	30	XAOZZ		18T8653D1	27315	...SPACER SLEEVE SQUARE HOLE HANDLE	EA	1
21	31	XBOZZ	5305-00-225-3838	MS90725-4	96906	...SCREW,CAP,HEXAGON 1/4-20X5/8 LATCH	EA	4
21	32	XBOZZ	5310-00-582-5965	MS35338-44	96906	...WASHER,LOCK 1/4 LATCH	EA	4
21	33	XDOZZ	2540-01-032-4654	48738	19220	...LATCH ASSEMBLY DOOR	EA	1
21	34	XBOZZ		27Z672D3	27315	..SEAL DOOR RUBBER 84 LG	EA	1
21	35	XBOZZ	5305-00-942-2196	MS18154-60	96906	.SCREW,CAP HEXAGON 3-8-16X1 TOP PANEL	EA	34
21	36	XBOZZ	5310-00-637-9541	MS35338-46	96906	.WASHER,LOCK 3-8 TOP PANEL	EA	34
21	37	XBOZZ	5310-00-824-4542	RS80325MSC	73484	.WASHER,SEALING TOP PANEL	EA	34

(1) ILLUSTRATION (a) FIG NO.	(b) ITEM NO.	(2) SMR CODE	(3) NATIONAL STOCK NUMBER	(4) PART NUMBER	(5) FSCM	(6) DESCRIPTION USABLE ON CODE	(7) U/M	(8) QTY INC IN UNIT
21	38	XBOZZ	5310-00-732-0558	MS51967-8	96906	.NUT,PLAIN HEXAGON 3-8-16 TOP PANEL..........................	EA	34
21	39	XDOFF		27J1372	27315	.PANEL,TOP LEFT SIDE CRANE CAB................................	EA	1
21	40	PAOZZ	5305-00-942-2196	MS18154-60	96906	.SCREW,CAP,HEX HD 3/8-16X1 PANEL CRANE........................	EA	24
21	41	PAOZZ	5310-00-004-5033	MS35338-46	96906	.WASHER, LOCK 3/8 PANEL.......................................	EA	24
21	42	PAOZZ	5310-00-824-4542	RS80325MSC	73484	.WASHER, SEALING CRANE CAB PANEL..............................	EA	24
21	43	PAOZZ	5310-00-732-0558	MS51967-8	96906	.NUT, PLAIN HEX 3/8-16 PANEL..................................	EA	24
21	44	XBOZZ	5305-00-269-3208	MS90725-57	96906	.SCREW,CAP,HEXAGON 3-8-16X58 PANEL............................	EA	11
21	45	XBOZZ	5310-00-637-9541	MS35338-46	96906	.WASHER,LOCK 3-8 PANEL..	EA	11
21	46	XDOZZ		27J1358	27315	.PANEL LEFT SIDE CRANE CAB....................................	EA	1
21	47	XBOZZ	5305-00-942-2196	MS18154-60	96906	..SCREW,CAP,HEXAGON 3-8-16X1 LATCH............................	EA	2
21	48	XBOZZ		20H161404	27315	..NUT SELF-LOCKING 3-8-16 LATCH...............................	EA	2
21	49	XDOZZ		27T1774	27315	..LATCH PANEL CRANE CAB.......................................	EA	1

AMC FORM 1775, 1 OCT 73 (REPLACES AMC TEST FORMS 1753 AND 1754, 6 APR 70, WHICH WILL BE USED UNTIL 1 JUL 74)

REPAIR PARTS LIST

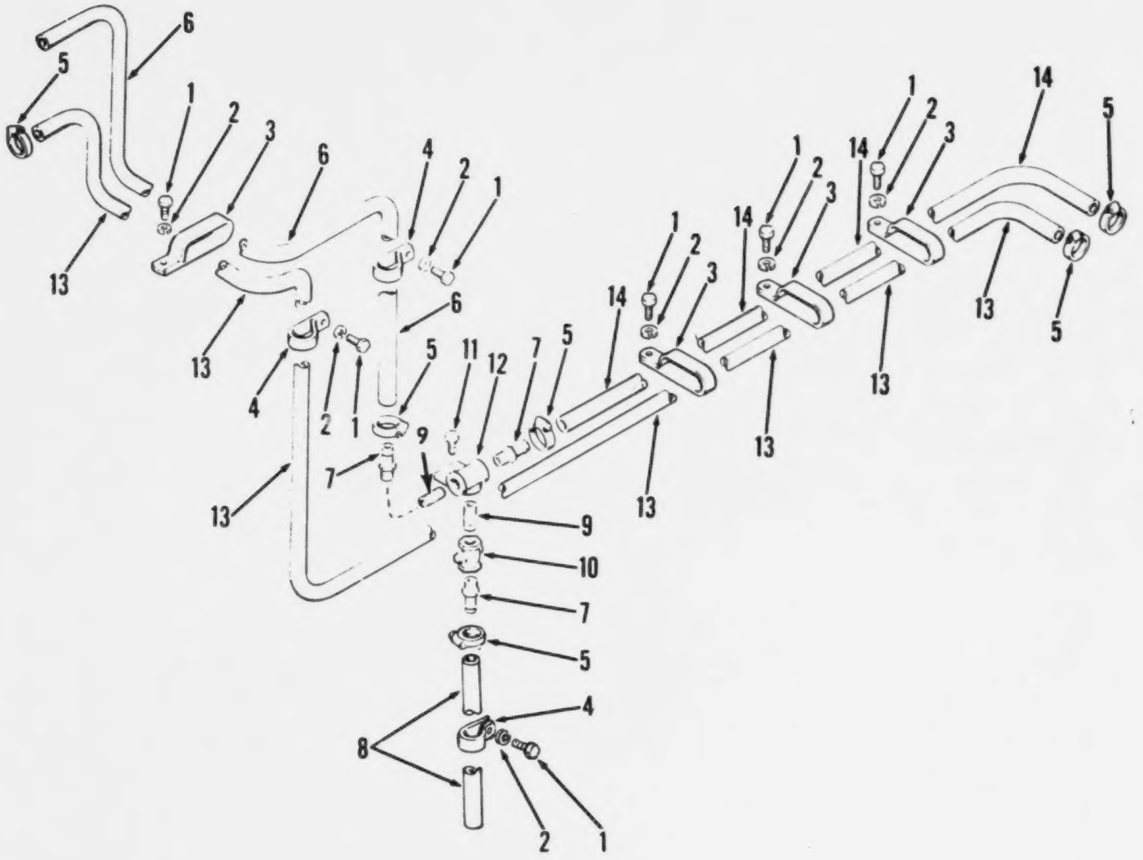

Figure 22. Heater hoses

(1) ILLUSTRATION (a) FIG NO.	(b) ITEM NO.	(2) SMR CODE	(3) NATIONAL STOCK NUMBER	(4) PART NUMBER	(5) FSCM	(6) DESCRIPTION USABLE ON CODE	(7) U/M	(8) QTY INC IN UNIT
						FUNCTIONAL GROUP 11 HEATER,HOSES,AND DUCTS		
						CRANE CAB		
22	1	XDOZZ		20Z4107	96906	..SCREW CAP 3-8X3-4 CLAMPS..............................	EA	10
22	2	XDOZZ	5310-00-637-9541	MS35338-46	96906	..WASHER,LOCK 3-8 CLAMPS..............................	EA	8
22	3	XBOZZ		CO1613	75272	..CLAMP HOSE HEATER HOSE..............................	EA	5
22	4	XBOZZ		CC1613	75272	..CLAMP HOSE HEATER HOSE..............................	EA	2
22	5	XDOZZ	4730-00-908-3193	MS35842-12	96906	..CLAMP HOSE HEATER HOSE..............................	EA	2
22	6	XDOZZ		44Z37509	27315	.HOSE RUBBER 60 IN.5-8 ID.SPEC.ZZH28C TYPE 1 GR.B CL.2.......	FT	1
22	7	PAOZZ	4730-00-406-6990	15851-10	98441	..ADAPTER,STRAIGHT HEATER DRAIN..............................	EA	3
22	8	PCOZZ		44Z375D52	27315	.HOSE:RUBBER,26 IN LG,5/8 ID;SPEC-ZZH428C TYPE 1,GR.B.CLASS 2	EA	1
22	9	XBOZZ		26-100J4329	27315	..NIPPLE PIPE 1-2 NPT CLOSE..............................	EA	2
22	10	XDOZZ		250-1-2	14959	..VALVE DRAIN 1-2 NPT HEATER DRAIN..............................	EA	1
22	11	XBOZZ		20Z4107	27315	..SCREW..............................	EA	2
22	12	XBOZZ		44P1400	27315	..TEE PIPE 1-2 NPT WITH BRACKET..............................	EA	1
22	13	PCOZZ		44T375D27	27315	..HOSE RUBBER 5-8 ID.14 FT.SPEC.ZZH428C..............................	FT	1
22	14	PCOZZ		44T375D12	27315	..HOSE RUBBER 5-8 ID.6 FT.SPEC.ZZH428C..............................	FT	1

AMC FORM 1779, 1 OCT 73 (REPLACES AMC TEST FORMS 1783 AND 1784, 6 APR 70, WHICH WILL BE USED UNTIL 1 JUL 74)

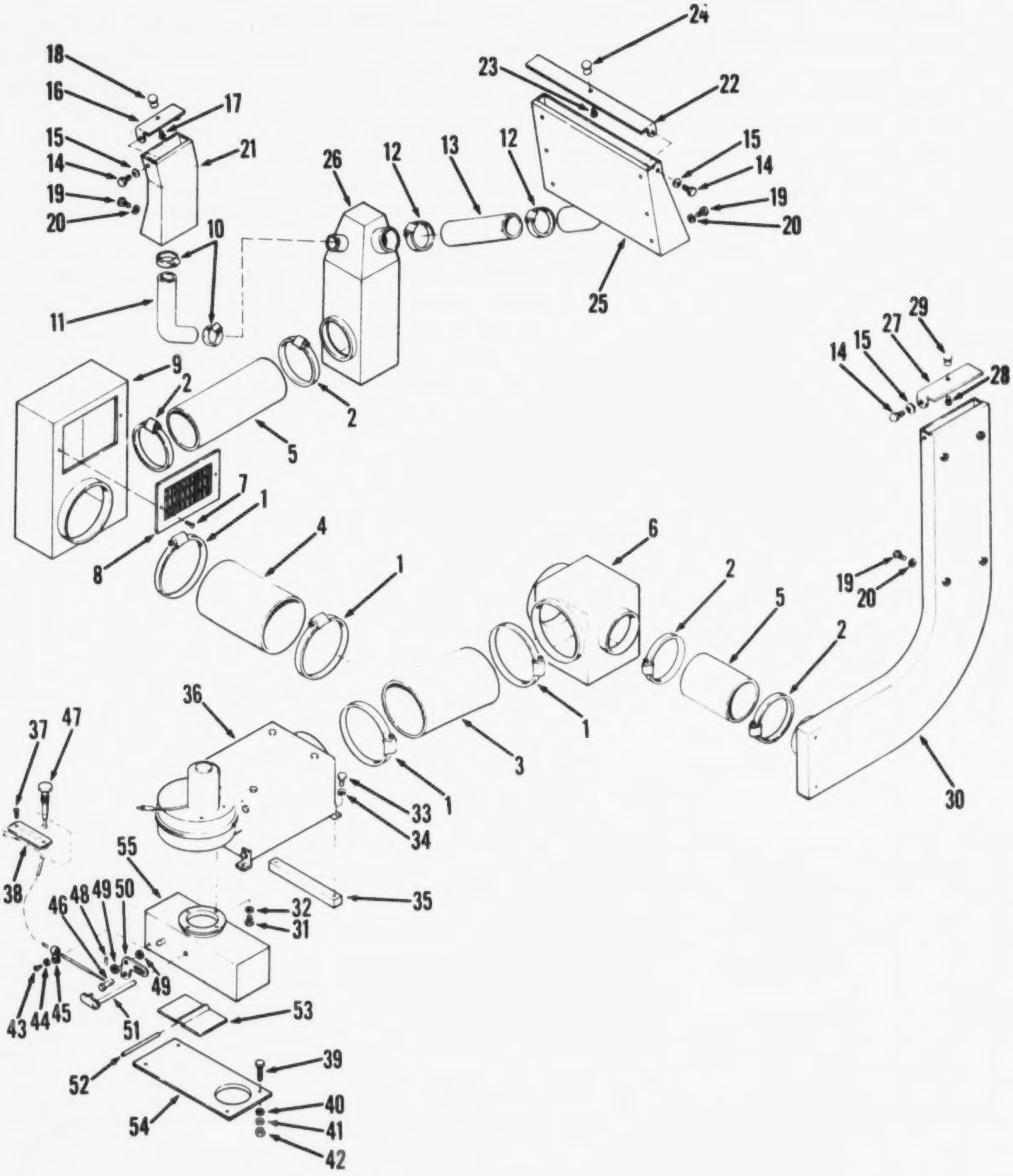

Figure 23. Heater assembly and ducts

(1) ILLUSTRATION (a) FIG NO.	(b) ITEM NO.	(2) SMR CODE	(3) FEDERAL STOCK NUMBER	(4) PART NUMBER	(5) FSCM	(6) DESCRIPTION USABLE ON CODE	(7) U/M	(8) QTY INC IN UNIT
						FUNCTIONAL GROUP 11 HEATER,HOSES,AND DUCTS CRANE CAB		
23		XDOOO		100J4329-1	27315	.HEATER ASSEMBLY UPPER 3K BTU..............................	EA	1
23	1	XBOZZ	4730-00-585-7987	44Z12D4	27315	..CLAMP,HOSE HEATER DUCT 6 ID...............................	EA	4
23	2	XBOZZ		C64P	66295	..CLAMP HEATER DUCT 4 ID....................................	EA	4
23	3	XDOZZ		44Z209D5	27315	..DUCT,HEATER 6 ID.11 IN.LG.SPEC.MILH8796.YPE 1 CL.2.........	PT	1
23	4	XDOZZ		44Z209D6	27315	..DUCT,HEATER 6 ID.9 LG.SPEC.MILH8796 TYPE1 CL.2.............	EA	1
23	5	XBOZZ		44Z209D2	27315	..DUCT,HEATER 4 ID.12 LG.SPEC.MILH8796.... 1 CL.2............	EA	2
23	6	XDOZZ		27N2650	27315	..DEFLECTOR AIR HEATER PLENUM...............................	EA	1
23	7	XBOZZ		20Z40D14	27315	..SCREW CAP NO.10X1-2 LOUVER.................................	EA	2
23	8	XDOZZ		27Z671	27315	LOUVER AIR CAB CHAMBER PN.M22 A&A REGISTER CO.CLEVELAND ..LOUVER AIR CAB CHAMBER PN.M22 A&A...........................	EA	1
23	9	XDOZZ		14N2109	27315	..CHAMBER CAB HEATER CRANE CAB..............................	EA	1
23	10	XBOZZ		C23P	66295	..CLAMP HOSE 2 ID.DEFROST HOSE..............................	EA	2
23	11	PCOZZ	4720-00-456-1079	14Z209D1	27315	..HOSE,AIR DUCT 2 ID.12 LG.SPEC.MILH8796..PE 1 CL.2..........	EA	1
23	12	XBOZZ		C48F	66295	..CLAMP HOSE DEFROST HOSE...................................	EA	2
23	13	XBOZZ	4730-00-881-1161	44Z209D3	27315	..COUPLING,PIPE 3 ID.8 LG.SPEC.MILH8796...E 1 CL.2...........	EA	1
23	14	XBOZZ		20Z886D11	27315	..SCREW CAP 3-8-16X7-16 COVERS..............................	EA	6
23	15	XBOZZ		17Z286D4	27315	..WASHER SPRING 3-8 COVERS..................................	EA	6
23	16	XDOZZ		14P2541D2	27315	..COVER ASSEMBLY DEFROST LEFT HAND WINDOW....................	EA	1
23	17	XDOZZ	5305-00-989-7434	MS35207-263	96906	...SCREW,MACHINE 10-32X1-2 KNOB.............................	EA	1
23	18	XBOZZ		B43310A1	41625	...KNOB COVER DEFROST DUCT..................................	EA	1
23	19	XDOZZ	5305-00-269-3206	MS90725-55	96906	..SCREW,CAP,HEXAG 3-8-16X1-2 DEFROST DUCTS...................	EA	16
23	20	XBOZZ	5310-00-584-5272	MS35338-48	96906	..WASHER,LOCK 3-8 DEFROST DUCTS.............................	EA	16
23	21	XDOZZ		14N2107	27315	..DUCT,WINDOW DEFROST DUCT LEFT HAND.........................	EA	1
23	22	XDOZZ		14P2541D3	27315	..COVER ASSEMBLY DEFROST DUCT...............................	EA	1
23	23	XDOZZ	5305-00-989-7434	MS35207-263	96906	...SCREW,MACHINE 10-32X1-2 KNOB.............................	EA	1
23	24	XBOZZ		B43310A1	41625	...KNOB COVER DEFROST DUCT..................................	EA	1
23	25	XDOZZ		14N2108	27315	..DUCT DEFROST FRONT WINDOW.................................	EA	1
23	26	XDOZZ		27N2671	27315	..CHAMBER AIR DEFROST.......................................	EA	1
23	27	XDOZZ		14P2541D1	27315	..COVER ASSEMBLY DEFROST DUCT...............................	EA	1
23	28	XDOZZ	5305-00-989-7434	MS35207-263	96906	...SCREW,MACHINE 10-32X1-2 KNOB.............................	EA	1
23	29	XBOZZ		B43310A1	41625	...KNOB COVER DEFROST.......................................	EA	1
23	30	XDOZZ		14J1216	27315	..DUCT DEFROST RH WINDOW....................................	EA	1
23	31	XBOZZ		MS90725-3	96906	..SCREW,CAP,HEX HD: 1/4-20 X 1/2,HEATER......................	EA	4
23	32	XDOZZ	5310-00-582-5965	MS35338-44	96906	.WASHER,LOCK 1-4 HEATER.....................................	EA	4
23	33	XDOZZ	5306-00-225-8494	MS90725-29	96906	..BOLT,MACHINE 5-16-18X1-2 HEATER...........................	EA	4
23	34	XDOZZ	5310-00-407-9566	MS35338-45	96906	..WASHER,LOCK 5-16 HEATER...................................	EA	4
23	35	XDOZZ		16T5085	27315	..BASE HEATER WELDED TO CRANE PLATFORM.......................	EA	2
23	36	PBOOZ	2540-00-020-8591	MS51326-1	96906	..HEATER,VEHICULAR,CO CRANE HEATER 92878..DEL HW30 3-30999....	EA	1
23	37	XDOZZ	5306-01-046-0492	MS90399	96906	..SCREW,DRIVE 188 OD.392 LG.PLATE...........................	EA	2
23	38	XBOZZ	9905-01-029-5763	32Z1465	27315	..PLATE INTRUCTION HEATER AIR INTAKE PLATE..................	EA	1

(1) ILLUSTRATION (a) FIG NO.	(b) ITEM NO.	(2) SMR CODE	(3) NATIONAL STOCK NUMBER	(4) PART NUMBER	(5) FSCM	(6) DESCRIPTION USABLE ON CODE	(7) U/M	(8) QTY INC IN UNIT
23	39	XDOZZ	5306-00-225-8502	MS90725-38	96906	..BOLT,MACHINE 5-16-18X1-2 MIXING CHAMBER..................	EA	4
23	40	XDOZZ	5310-00-081-4219	MS27183-12	96906	..WASHER,FLAT 5-16 MIXING CHAMBER SPACING..................	EA	16
23	41	XDOZZ	5310-00-407-9566	MS35338-45	96906	..WASHER,LOCK 5-16 MIXING CHAMBER..................	EA	4
23	42	XDOZZ	5310-00-880-7744	MS51967-5	96906	..NUT,PLAIN,HEXAGON 5-16-18 MIXING CHAMBER..................	EA	4
23		XDOZZ		27P2668	27315	..HEATER MIXING AIR MIXING CHAMBER..................	EA	1
23	43	XDOZZ	5305-01-029-6832	11-27P2668	27315	...SCREW,MACHINE 12-24X1-2 CLAMP..................	EA	1
23	44	XDOZZ	5310-00-584-5272	MS35338-48	96906	...WASHER,LOCK 12 CLAMP..................	EA	1
23	45	XDOZZ		22-7115-00	04710	...CLAMP CABLE CONTROL CABLE..................	EA	1
23	46	XDOZZ	5305-01-029 6833	21-227-05	04710	...SWIVEL SCREW CONTROL CABLE..................	EA	1
23	47	PAOZZ	2590-01-032-1346	70-C122-23	04710	...CABLE CONTROL,HEATE HEATER AIR INTAKE..................	EA	1
23	48	XBOZZ		192804	27315	...PIN SPRING 062 X 3-8 LG. LEVER..................	EA	1
23	49	PAOZZ	5310-00-081-4219	MS27183-12	96906	...WASHER,FLAT 5-16 LEVER..................	EA	3
23	50	XDOZZ		6T2497	27315	...LEVER,CABLE AIR INTAKE..................	EA	1
23	51	XDOZZ		6T2498	27315	...LEVER,HEATER AIR INTAKE WELDED TO ROD..................	EA	1
23	52	XDOZZ		3-27P2668	27315	...ROD DEFLECTOR WELDED TO DEFLECTOR..................	EA	1
23	53	XDOZZ		27T1767	27315	...DEFLECTOR AIR INTAKE WELDED TO ROD..................	EA	1
23	54	XDOZZ		14T5081	27315	...BASE MIX CHAMB MTG FOR CHAMBER WELDED..................	EA	1
23	71	XDOZZ		27P2666	27315	...CHAMBER AIR INTAKE WELDED TO BASE..................	EA	1

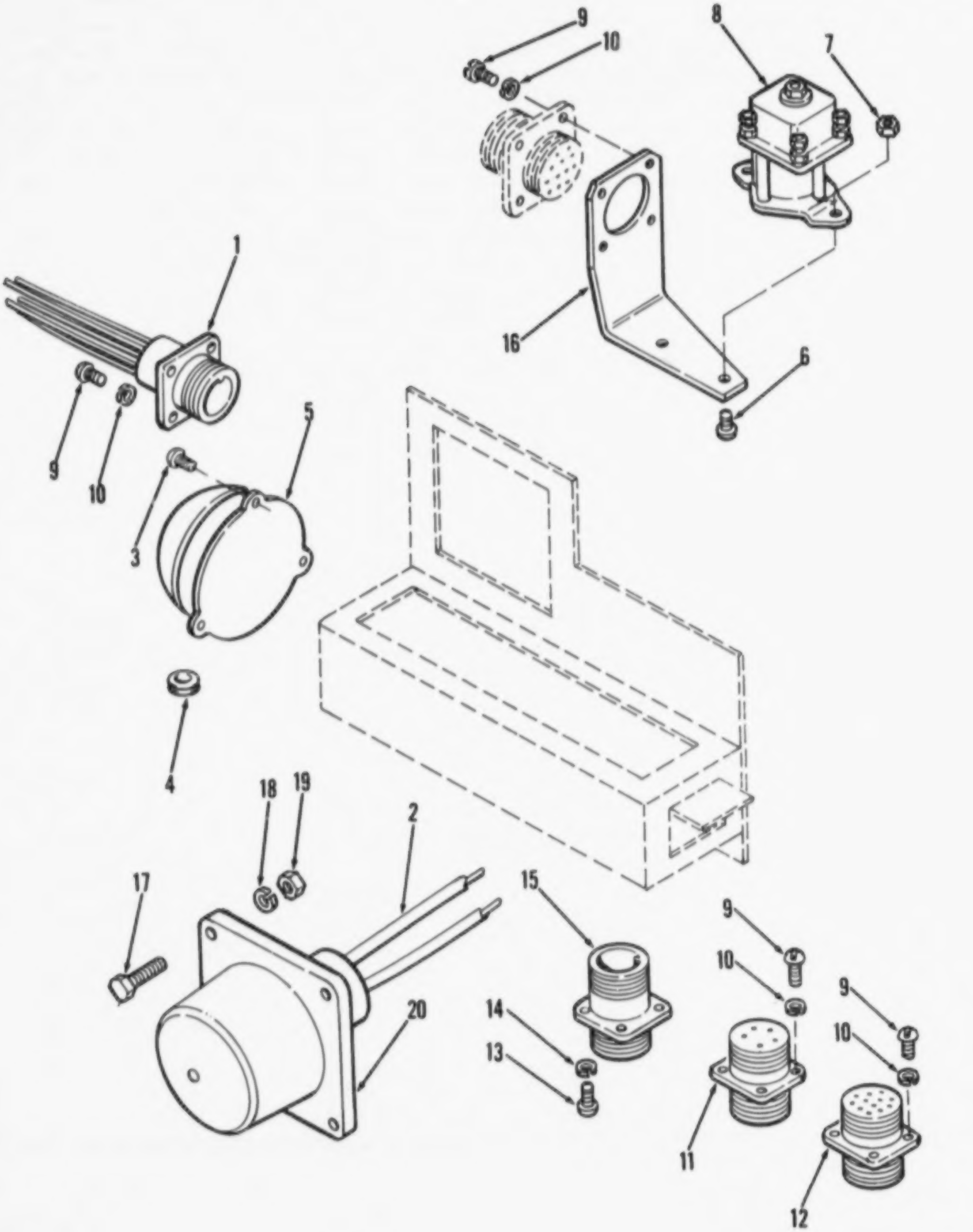

Figure 24. Wiring assembly (Sheet 1 of 3)

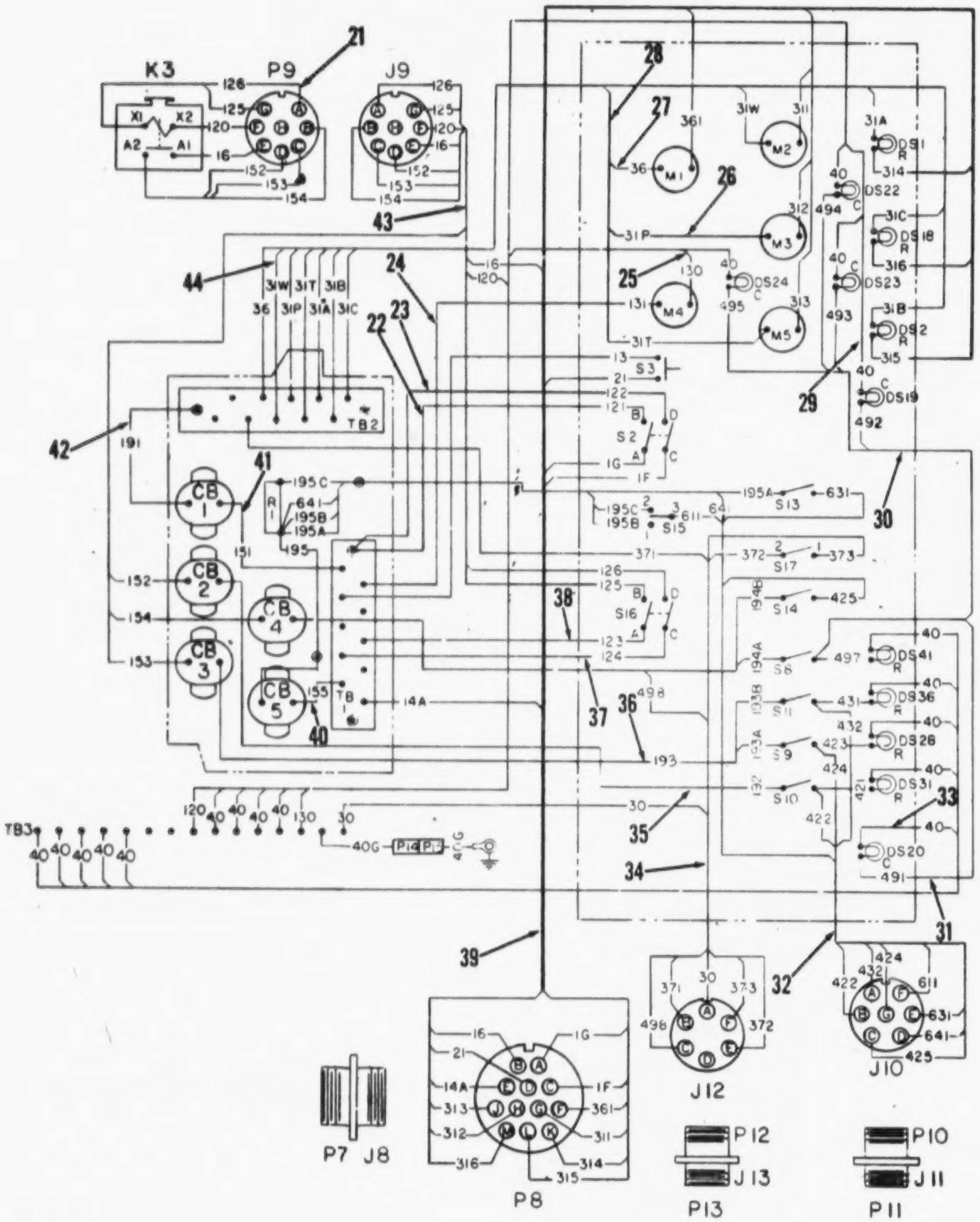

TA032686

Figure 24. Wiring assembly (Sheet 2 of 3)

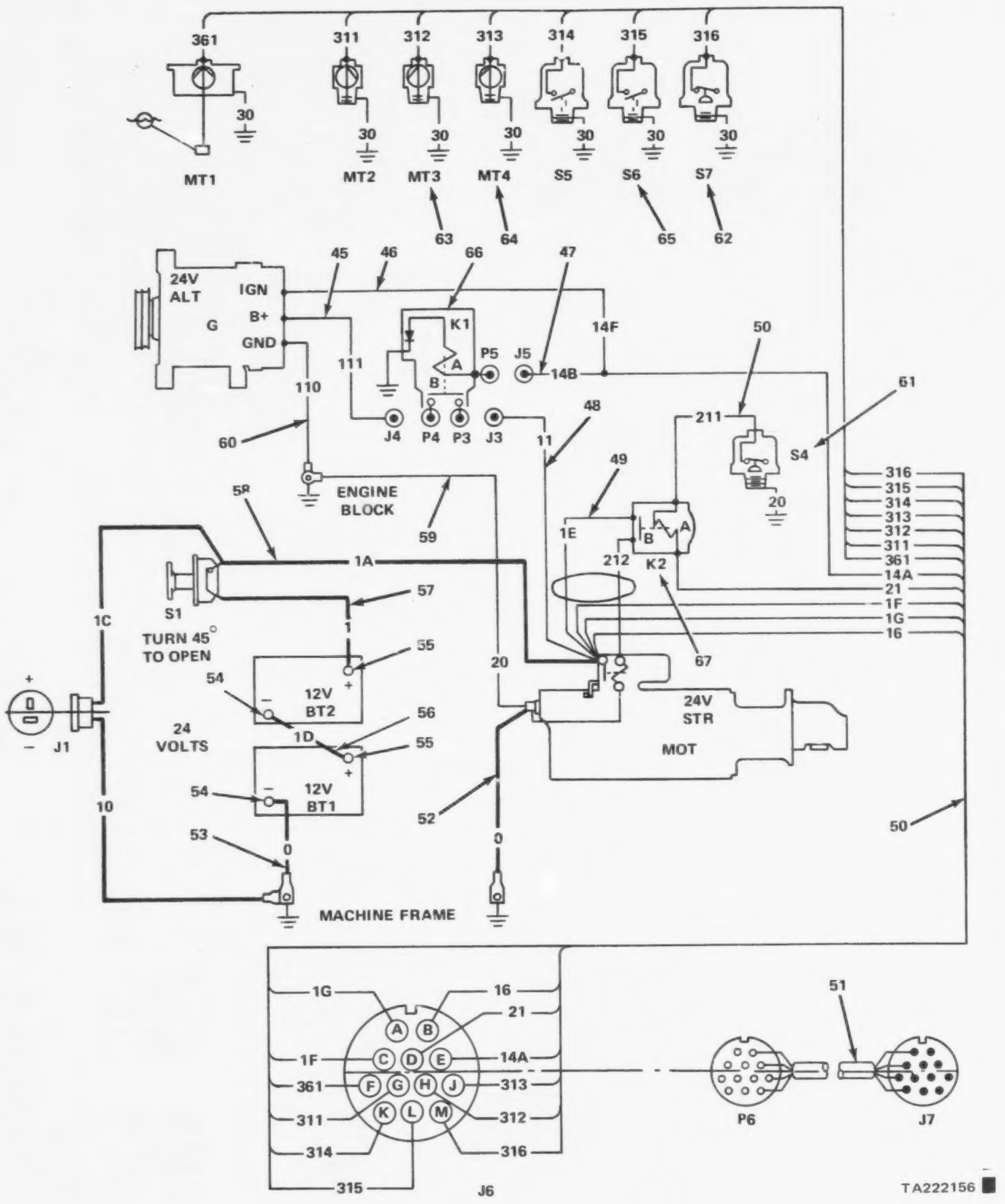

TA222156

Figure 24. Wiring assembly (Sheet 3 of 3)

(1) ILLUSTRATION (a) FIG NO.	(b) ITEM NO.	(2) SMR CODE	(3) NATIONAL STOCK NUMBER	(4) PART NUMBER	(5) FSCM	(6) DESCRIPTION USABLE ON CODE	(7) U/M	(8) QTY INC IN UNIT
						FUNCTIONAL GROUP 12 WIRING INSTALLATION		
24		XDOFZ	2590-01-038-1918	100J4315	27315	..WIRING ASSEMBLY CRANE..	EA	1
24	1	XDOZZ	2590-01-032-1349	15-100J4315	27315	..WIRING HARNESS ENGINE..	EA	1
24	2	PBOZZ	2590-01-032-1350	16-100J4315	27315	..WIRING HARNESS SLAVE RECEPTACLE................................	EA	1
24	3	XDOZZ	5305-00-984-6208	MS35206-261	96906	..SCREW,MACHINE 10-24X3-8 WARNING BELL...........................	EA	3
24	4	PCOZZ	5325-01-030-7564	G1131	79497	..GROMMET RUBBER BELL HOUSING....................................	EA	1
24	5	XDOZZ		156A	19557	..BELL WARNING LOAD SAFETY DEVICE................................	EA	1
24	6	XBOZZ		MS35206-264	96906	..SCREW,MACHINE 4-40 X 5/8,RELAY.................................	EA	2
24	7	XDOZZ	5310-00-208-1918	AN365-1024A	88044	..NUT,SELF-LOCKING 10-24 RELAY...................................	EA	2
24	8	PAOZZ	5945-00-817-7894	MS24187D1	96906	..RELAY,SOLENOID CRANE...	EA	1
24	9	XDOZZ	5305-00-885-2557	MS35206-215	96906	..SCREW,MACHINE 4-40X3-8 RECEPTACLE..............................	EA	12
24	10	XDOZZ	5310-00-543-2410	MS35338-40	96906	..WASHER,LOCK NO.4 RECEPTACLE....................................	EA	12
24	11	XBOZZ		TBF22-15PS	31746	..CONNECTOR ELECTRICAL...	EA	1
24	12	XDOZZ		TBF22-28PS	31746	..CONNECTOR ELECTRICAL...	EA	1
24	13	XDOZZ	5305-00-994-4989	MS35206-229	96906	..SCREW,MACHINE 6-32X3-8 RECEPTACLE..............................	EA	8
24	14	XDOZZ	5310-00-045-4007	MS35338-41	96906	..WASHER,LOCK NO.6 RECEPTACLE....................................	EA	8
24	15	XDOZZ		TBF24-2008-24PS	31746	..CONNECTOR ELECTRICAL...	EA	1
24	16	XDOZZ		16P3852	27315	..BRACKET RELAY POWER..	EA	1
24	17	PAOZZ	5305-00-225-3839	MS90725-8	96906	..SCREW, CAP, HEX HD 1/4-20X1 SLAVE..............................	EA	4
24	18	PAOZZ	5310-00-582-5965	MS35338-44	96906	..WASHER, LOCK 1/4 SLAVE RECEPTACLE..............................	EA	4
24	19	XBOZZ	5310-00-761-6882	MS51967-2	96906	..NUT, PLAIN HEX 1/4-20 SLAVE RECEPTACLE.........................	EA	4
24	20	XBOZZ	5935-00-295-6403	MS75058-1	96906	..RECEPTACLE, SLAVE ENGINE WIRING HARNESS........................	EA	1
24	21	MFOFF		79Q415	27315	..WIRING HARNESS POWER RELAY.....................................	EA	1
24	22	MFOFF		79Z283002	27315	.LEAD, ELECTRICAL 121, MAIN SWITCH...............................	EA	1
24	23	MFOFF		79Z283001	27315	.LEAD, ELECTRICAL 122, MAIN SWITCH...............................	FT	1
24	24	MFOZZ		79Z283106	27315	.LEAD, ELECTRICAL 131, AMMETER...................................	EA	1
24	25	MFOFF		79Z2828	27315	.LEAD, ELECTRICAL 130, AMMETER...................................	EA	1
24	26	MFOFF		79Z283102	27315	.LEAD, ELECTRICAL 31P, OIL PRESSURE..............................	EA	1
24	27	MFOZZ		79Z283107	27315	.LEAD, ELECTRICAL 36, FUEL LEVEL.................................	EA	1
24	28	MFOFF		79Z283108	27315	.LEAD, ELECTRICAL 31T, OIL TEMPERATURE...........................	EA	1
24	29	MFOFF		79Z282701	27315	.LEAD, ELECTRICAL 40, INDICATOR LIGHT............................	EA	1
24	30	MFOZZ		79Q417	27315	.WIRING HARNESS PANEL LIGHTS.....................................	EA	1
24	31	MFOFF		79Z2829	27315	.LEAD, ELECTRICAL 491, PANEL LIGHT...............................	EA	1
24	32	MFOFF		79U1121	27315	.WIRING HARNESS PANEL SWITCHES...................................	EA	1
24	33	MFOZZ		79Z282702	27315	.LEAD, ELECTRICAL 40, PANEL LIGHT................................	EA	1
24	34	MFOZZ		79U1122	27315	.WIRING HARNESS PANEL..	EA	1
24	35	MFOZZ		79Z2826	27315	.LEAD, ELECTRICAL 192, SWITCH....................................	EA	1
24	36	MFOFF		79Z2833	27315	.LEAD, ELECTRICAL 193, SWITCHES..................................	EA	1
24	37	MFOFF		79Z283202	27315	.LEAD, ELECTRICAL 124, MAIN SWITCH...............................	EA	1

AMC FORM 1779, 1 OCT 73 (REPLACES AMC TEST FORMS 1753 AND 1754, 6 APR 70, WHICH WILL BE USED UNTIL 1 JUL 74)

(1) ILLUSTRATION (a) FIG NO.	(b) ITEM NO.	(2) SMR CODE	(3) NATIONAL STOCK NUMBER	(4) PART NUMBER	(5) FSCM	(6) DESCRIPTION USABLE ON CODE	(7) U/M	(8) QTY INC IN UNIT
24	38	MFOFF		79Z283201	27315	.LEAD, ELECTRICAL 123,MAIN SWITCH..............................	FT	1
24	39	MFOFF		79U1123	27315	.WIRING HARNESS PANEL..	EA	1
24	40	MFOFF		79Z283103	27315	.LEAD, ELECTRICAL 155, CIRCUIT BREAKER..........................	EA	1
24	41	MFOFF		79Z283104	27315	.LEAD, ELECTRICAL 151, CIRCUIT BREAKER..........................	EA	1
24	42	MFOFF		79Z283101	27315	.LEAD, ELECTRICAL 191, CIRCUIT BREAKER..........................	EA	1
24	43	MFOFF		790416	27315	.WIRING HARNESS PANEL..	EA	1
24	44	MFOFF		79Z283105	27315	.LEAD, ELECTRICAL 31W, COOLANT TEMPERATURE INDICATOR.........	EA	1
24	45	MFOFF		79Z2844	27315	CABLE ASSEMBLY 111, ALTERNATOR: MFG FROM MS3106F22-7S, .CABLE ASSEMBLY 111, ALTERNATOR: MFG FROM.......................	EA	1
24	46	MFOFF		79Z2843	27315	LEAD, ELECTRICAL 14F, ALTERNATOR: MFG FROM MS27142-2, .LEAD, ELECTRICAL 14F, ALTERNATOR: MFG...........................	FT	1
24	47	MFOFF		79Z2845	27315	CABLE ASSEMBLY RELAY: MFG FROM P/N MS27144-1,MS25036-108, .CABLE ASSEMBLY RELAY: MFG FROM P/N..............................	EA	1
24	48	MFOFF		79Z2853	27315	CABLE ASSEMBLY 11, STARTER TO RELAY: MFG FROM MS3106F22-7S, .CABLE ASSEMBLY 11, STARTER TO RELAY: MFG	EA	1
24	49	MFOFF		79Z2852	27315	WIRING HARNESS STARTER TO RELAY: MFG FROM MS25036- .WIRING HARNESS STARTER TO RELAY: MFG FROM.....................	EA	1
24	50	MFOFF		79U1127	27315	WIRING HARNESS ENGINE: MFG FROM MS3106F22-7S,MS27147-1, .WIRING HARNESS ENGINE: MFG FROM................................	EA	1
24	51	MFOFF		790420	27315	WIRING HARNESS INTERCONNECTING, ENGINE: MFG FROM CA06R24- .WIRING HARNESS INTERCONNECTING, ENGINE:.......................	EA	1
24	52	MFOFF	6145-00-705-6674	7056674	81349	CABLE ASSEMBLY 0, STARTER TO GROUND: MFG FROM 7355520, .CABLE ASSEMBLY 0, STARTER TO GROUND: MFG......................	EA	1
24	53	MFOFF	6145-00-705-6674	7056674	81349	CABLE ASSEMBLY 0, BATTERY TO GROUND: MFG FROM 7056732, .CABLE ASSEMBLY 0, BATTERY TO GROUND: MFG......................	EA	1
24	54	PAOZZ	5940-00-549-6583	MS75004-2	96906	.ADAPTER,BATTERY TER NEGATIVE....................................	EA	2
24	55	PAOZZ	5940-00-549-6581	MS75004-1	96906	.ADAPTER,BATTERY TER POSITIVE....................................	EA	2
24	56	MFOFF	6145-00-705-6674	7056674	81349	.CABLE ASSEMBLY 10, BATTERIES....................................	EA	1
24	57	MFOFF	6145-00-705-6674	7056674	81349	.CABLE ASSEMBLY BATTERY TO DISCONNECT...........................	EA	1
24	58	MFOFF	6145-00-705-6674	7056674	81349	.CABLE ASSEMBLY 1A, DISCONNECT TO STARTER......................	EA	1
24	59	MFOFF		79Z2846	27315	CABLE ASSEMBLY STARTER TO ENGINE BLOCK : MFG FROM 7056730, .CABLE ASSEMBLY STARTER TO ENGINE CLOCK :......................	EA	1
24	60	MFOFF		79Z2850	27315	CABLE ASSEMBLY ALTERNATOR TO GROUND: MFG FROM 7056730, .CABLE ASSEMBLY ALTERNATOR TO GROUND: MFG......................	EA	1

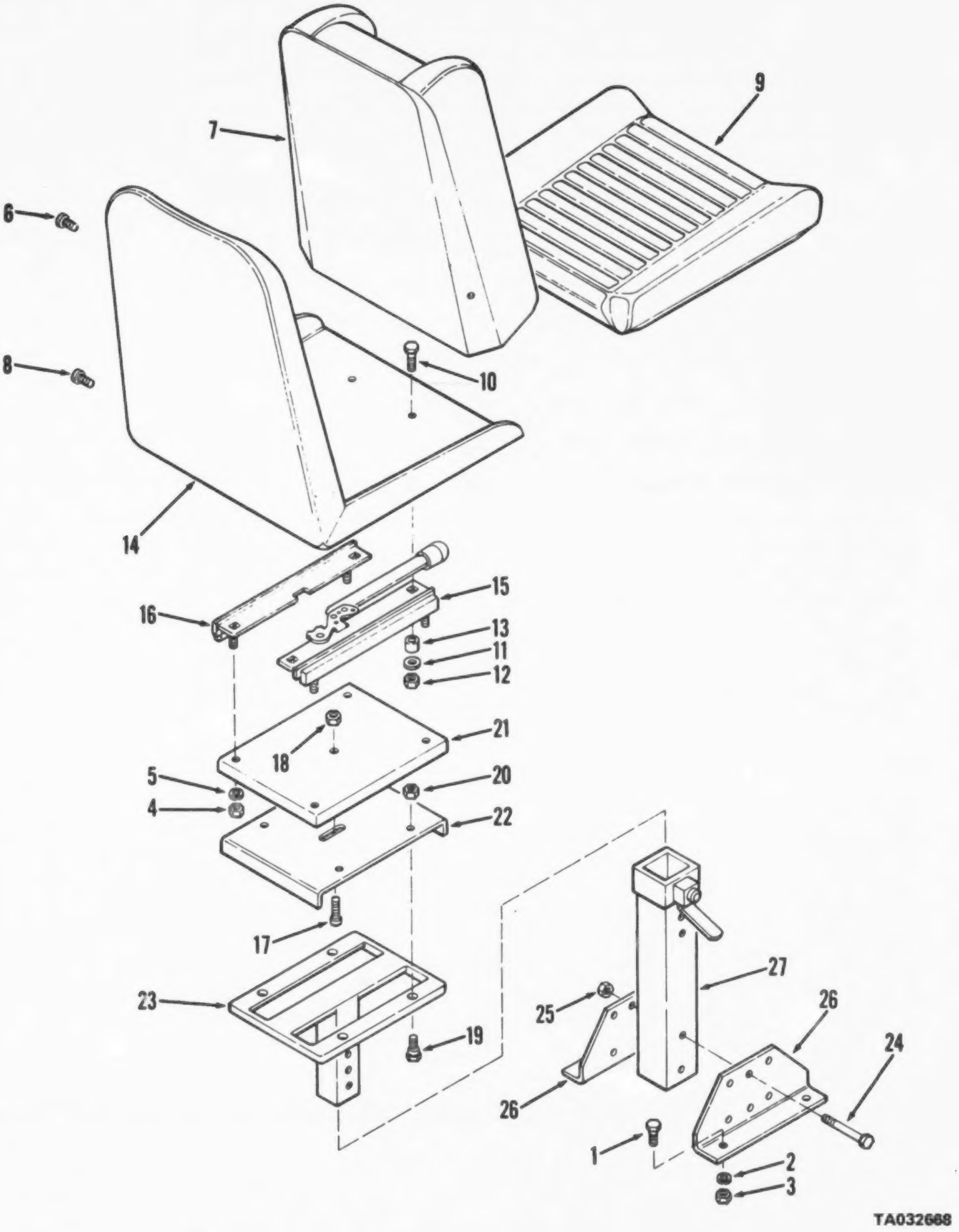

Figure 25. Seat assembly

(1) ILLUSTRATION (a) FIG NO	(b) ITEM NO	(2) SMR CODE	(3) NATIONAL STOCK NUMBER	(4) PART NUMBER	(5) FSCM	(6) DESCRIPTION USABLE ON CODE	(7) U/M	(8) QTY INC IN UNIT
						FUNCTIONAL GROUP 13 SEAT ASSEMBLY		
25	1	XDOZZ	5305-00-782-9494	MS90725-114	96906	..SCREW,CAP,HEXAGON 1-2-13X1-3-4 SEAT..............................	EA	4
25	1	XDOZZ	5310-00-584-5272	MS35338-48	96906	..WASHER,LOCK 1-2 SEAT..............................	EA	4
25	3	XDOZZ	5310-00-768-0318	MS51967-14	96906	..NUT,PLAIN HEXAGON 1-2-13 SEAT..............................	EA	4
25		XDOZZ		48U30	27315	.SEAT ASSEMBLY CRANE..............................	EA	1
25	4	XDOZZ	5310-00-880-7744	MS51967-5	96906	..NUT,PLAIN HEXAGON 3-16-18 SEAT..............................	EA	4
25	5	XDOZZ	5310-00-407-9566	MS35338-45	96906	..WASHER,LOCK 5-16 SEAT..............................	EA	4
25		XDOZZ		100001	09704	..SEAT,WITH CUSHION CRANE..............................	EA	4
25	6	PAOZZ	5305-01-040-2039	707196	09704	..SCREW,CAP,HEXAGON H W/LOCKWASHER,..............................	EA	2
25	7	PAOZZ	2540-01-032-1359	300002	09704	..CUSHION,SEAT BACK V CRANE SEAT..............................	EA	1
25	8	XBOZZ	5305-01-040-2039	707156	09704	..SCREW,SHELL SEAT 1-4-20X3-4..............................	EA	4
25	9	PAOZZ	2540-01-032-1357	300003	09704	..CUSHION,SEAT CRANE CAB..............................	EA	1
25	10	XDOZZ	5305-00-051-4076	MS90727-34	96906	..SCREW,SHELL SEAT 5-16-24X1 SEAT SHELL..............................	EA	4
25	11	XDOZZ	5310-01-030-9096	707057	09704	..WASHER,FLAT 5-16 SEAT SHELL..............................	EA	4
25	12	XDOZZ	5310-00-660-3381	MS21083N5	96906	..NUT PLAIN 5-16-24 SEAT SHFLL..............................	EA	4
25	13	XDOZZ		707282	09704	..SPACER CUP SEAT SHELL..............................	EA	4
25	14	XDOZZ		300001	09704	..SHELL SEAT CRANE METAL..............................	EA	1
25	15	XDOZZ		300011	09704	..TRACK SEAT CONTROL..............................	EA	1
25	16	XDOZZ		707C05	09704	..TRACK FREF SEAT..............................	EA	1
25		XDOZZ		300098	09704	..PEDESTAL ASSEMBLY UPPER CRANE SEAT..............................	EA	1
25	17	XDOZZ	5307-01-030-8713	500056	09704	..STUD LOCKED IN PEDESTAL ASSEMBLY..............................	EA	1
25	18	XDOZZ	5310-01-030-8711	707392	09704	..NUT,JAM 1-2-13 UPPER PEDESTAL..............................	EA	2
25	19	XDOZZ		707393	09704	..SCREW,SHOULDER SHOULDER..............................	EA	4
25	20	XBOZZ		707167	09704	..NUT,SELF LOCKING SELF LOCKING 3-8-16..............................	EA	4
25	21	XDOZZ		500036	09704	..PLATE,MOUNTING MOUNTING..............................	EA	1
25	22	XDOZZ		5000057	09704	..BRACKET,LOCKING LOCKING..............................	EA	1
25	23	XDOZZ		300216	09704	..PEDESTAL,UPPER UPPER CRANE SEAT..............................	EA	1
25		XDOZZ		300097	09704	..PEDESTAL ASSY LOWER CRANE SEAT..............................	EA	1
25	24	XBOZZ		707153	09704	..SCREW,CAP,HEXAGON CAP HEX 3-8-16X2-3-4..............................	EA	2
25	25	XBOZZ		707167	09704	..NUT,SELF LOCKING SELF LOCKING 3-8-16..............................	EA	2
25	26	XDOZZ		500006	09704	..PLATE,BASE BASE..............................	EA	2
25	27	XDOZZ		300088	09704	..TUBE ASSY LOWER PEDESTAL..............................	EA	1

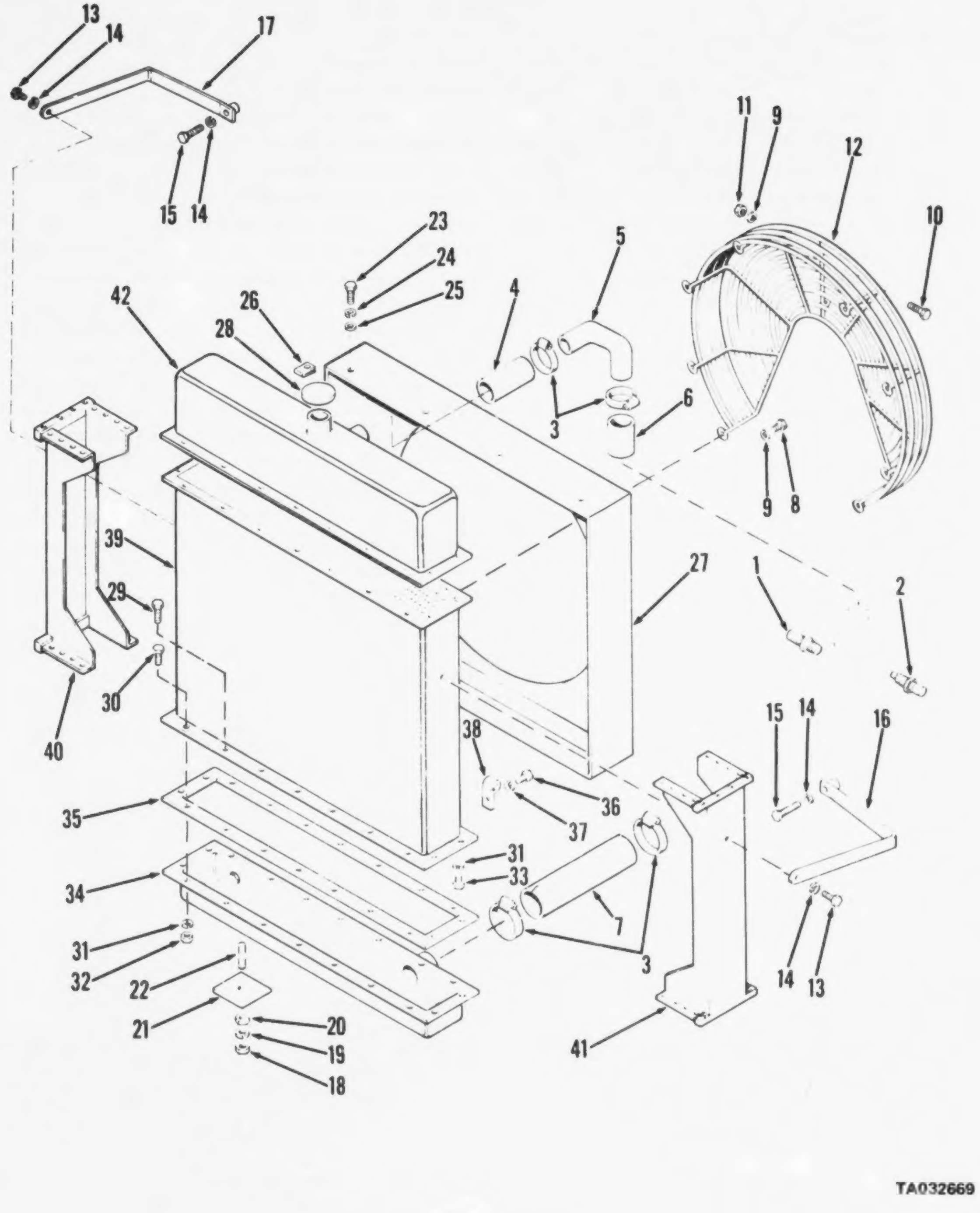

Figure 26. Radiator

(1) ILLUSTRATION (a) FIG NO.	(b) ITEM NO.	(2) SMR CODE	(3) NATIONAL STOCK NUMBER	(4) PART NUMBER	(5) FSCM	(6) DESCRIPTION USABLE ON CODE	(7) U/M	(8) QTY INC IN UNIT
						FUNCTIONAL GROUP 14 RADIATOR,ENGINE CRANE		
26	1	PAOZZ		MS12285-1-4	96906	SWITCH THERMOSTATIC,WATER	EA	1
26	2	PAOZZ	6685-00-814-5271	MS24537-1	96906	..TRANSMITTER WATER TEMP	EA	1
26	3	XDOZZ	4730-00-909-8627	MS35842-13	96906	..CLAMP,HOSE RADIATOR HOSES	EA	6
26	4	XDOZZ		44T376D1	27315	..HOSE,RUBBER 1-5-8 ID 4 LG UPPER RAD	EA	1
26	5	XDOZZ		18P4263	27315	..TUBE,RADIATOR UPPER	EA	1
26	6	XDOZZ		44T376D4	27315	..HOSE,RUBBER 1-5-8 ID 2-1-2 LG UPPER RAD	EA	1
26	7	XBOZZ		44T377D19	27315	..HOSE,RUBBER 2 ID 10 LG RAD LOWER	EA	1
26	8	XBOZZ		20Z88606	27315	..SCREW,CAP-SF-LK 3-8-16X3-4 FAN GUARD	EA	8
26	9	XDOZZ		MS27183-14	96906	..WASHER,FLAT 3-8 FAN GUARD	EA	12
26	10	XBOZZ		20Z646D47	27315	..SCREW CAP,HEXAGON 3-8-16X1 FAN GUARD	EA	2
26	11	XBOZZ		NT8407	75497	..NUT SLF-LOCKING 3-8-16 FAN GUARD	EA	2
26	12	XBOZZ		14U54	27315	..GUARD,FAN CRANE ENGINE	EA	1
26	13	XDOZZ	5305-00-942-2196	MS18154-60	96906	..SCREW CAP HEXAGON 3-8-16X1 RAD BRACE	EA	2
26	14	XDOZZ	5310-00-637-9541	MS35338-46	96906	..WASHER,LOCK 3-8 RAD BRACE	EA	4
26	15	XDOZZ	5305-00-269-3216	MS90725-66	96906	..SCREW CAP HEXAGON 3-8-16X2 RAD BRACE	EA	2
26	16	XBOZZ		20N25202	27315	..BRACE,RADIATOR CRANE ENGINE RH	EA	1
26	17	XBOZZ		20N25201	27315	BRACE,RADIATOR CRANE ENGINE LH	EA	1
26	18	XDOZZ	5310-00-768-0318	MS51967-14	96906	..NUT,PLAIN,HEXAGON 1-2-13 RADIATOR	EA	2
26	19	XDOZZ	5310-00-584-5272	MS35338-48	96906	..WASHER,LOCK 1-2 RADIATOR	EA	2
26	20	XDOZZ	5310-00-853-9335	MS35691-13	96906	..NUT,PLAIN,HEXAGON 1-2-13 RADIATOR	EA	2
26	21	XBOZZ		16T5067	27315	..PAD,RADIATOR CRANE,ENGINE	EA	2
26		XBOHH		RC8934	46529	.RADIATOR,ENGINE CRANE	EA	1
26	22	XBOZZ		20T5485D15	27315	..STUD,PLAIN 1-2-13X2-3-4 RADIATOR	EA	2
26	23	XBOZZ		MS90725-3	96906	..SCREW,CAP,HEX HD: 1/4-20 X 1/2,SHROUD	EA	8
26	24	XDOZZ	5310-00-582-5965	MS35338-44	96906	..WASHER-LOCK 1-4 SHROUD	EA	8
26	25	XDOZZ	5310-00-809-4058	MS27183-10	96906	..WASHER,FLAT 1-4 SHROUD	EA	8
26	26	XBOZZ		G320205	46529	..CLIP,SHROUD RADIATOR	EA	8
26	27	XBOZZ		A6-2202	46429	..SHROUD,RADIATOR CRANE ENGINE	EA	1
28	28	XBOZZ		G013618	46529	..CAP,RADIATOR CRANE ENGINE 15 PSI	EA	1
26	38	XBOZZ		G059387	46529	.CLAMP,TUBE OVERFLOW TUBE	EA	2

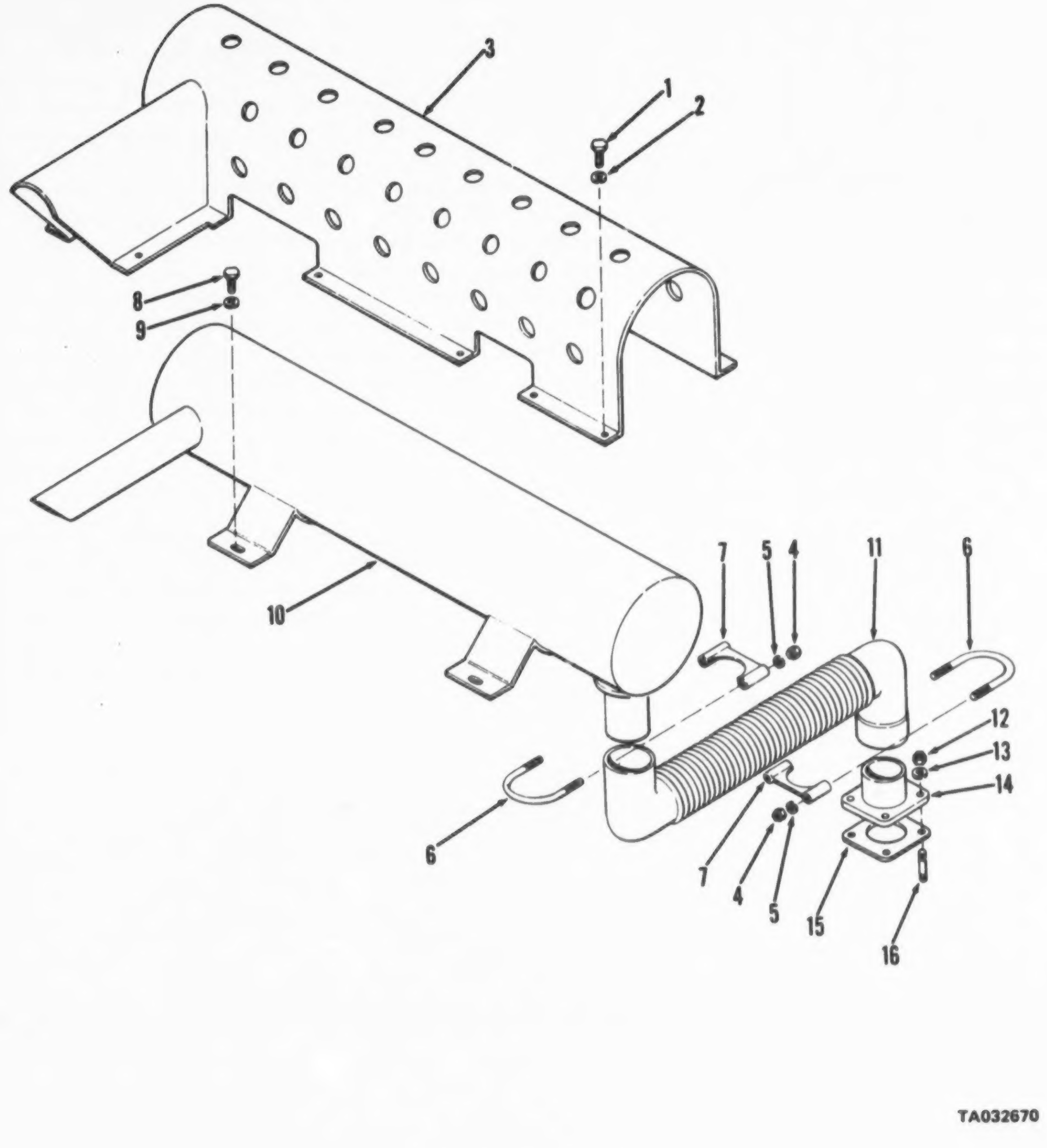

Figure 27. Muffler and pipes

(1) ILLUSTRATION (a) FIG NO.	(b) ITEM NO.	(2) SMR CODE	(3) NATIONAL STOCK NUMBER	(4) PART NUMBER	(5) FSCM	(6) DESCRIPTION USABLE ON CODE	(7) U/M	(8) QTY INC IN UNIT
						FUNCTIONAL GROUP 15 EXHAUST SYSTEM,ENGINE CRANE		
27	1	XDOZZ	5305-00-269-3208	MS9C725-57	96906	..SCREW,CAP,HEXAGON MUFFLER GUARD..........................	EA	12
27	2	XDOZZ	5310-00-637-9541	MS35338-46	96906	..WASHER,LOCK MUFFLER GUARD................................	EA	12
27	3	XBOZZ		27N2683	27315	..GUARD,MUFFLER CRANE ENGINE...............................	EA	1
27	4	XDOZZ	5310-00-761-6882	MS51967-2	96906	..NUT,PLAIN,HEXAGON MUFFLER CLAMP..........................	EA	4
27	5	XDOZZ	5310-00-582-5965	MS35338-44	96906	..WASHER,LOCK MUFFLER CLAMP................................	EA	4
27	6	XBOZZ	5306-01-046-3890	820P39404	27315	..BOLT,U MUFFLER CLAMP.....................................	EA	2
27	7	XBOZZ	5340-01-039-2279	820T54802	27315	..CLAMP,MUFFLER EXHAUST PIPE...............................	EA	2
27	8	XDOZZ	5305-00-269-3208	MS90725-57	96906	..SCREW,CAP HEXAGON MUFFLER................................	EA	4
27	9	XDOZZ	5310-00-637-9541	MS35338-46	96906	..WASHER,LOCK MUFFLER......................................	EA	4
27	10	XBOZZ		27Z652	27315	.MUFFLER,EXHAUST CRANE ENGINE..............................	EA	1
27	11	XBOZZ		27U10G	27315	.PIPE,EXHAUST CRANE ENGINE.................................	EA	1
27	12	XDOZZ	5310-00-903-3992	MS51970-3	96906	..NUT,PLAIN,HEXAGON FLANGE.................................	EA	4
27	13	XDOZZ	5310-00-637-9541	MS35338-46	96906	..WASHER,LOCK FLANGE.......................................	EA	4
27	14	XBOZZ		27P2659	27315	..FLANGE,EXHAUST CRANE ENGINE..............................	EA	1
27	15	XBOZZ		51089207	72582	..GASKET,FLANGE EXHAUST....................................	EA	1
27	16	XDOZZ	5307-00-900-8519	5109158	72582	..STUD,PLAIN EXHAUST FLANGE................................	EA	4

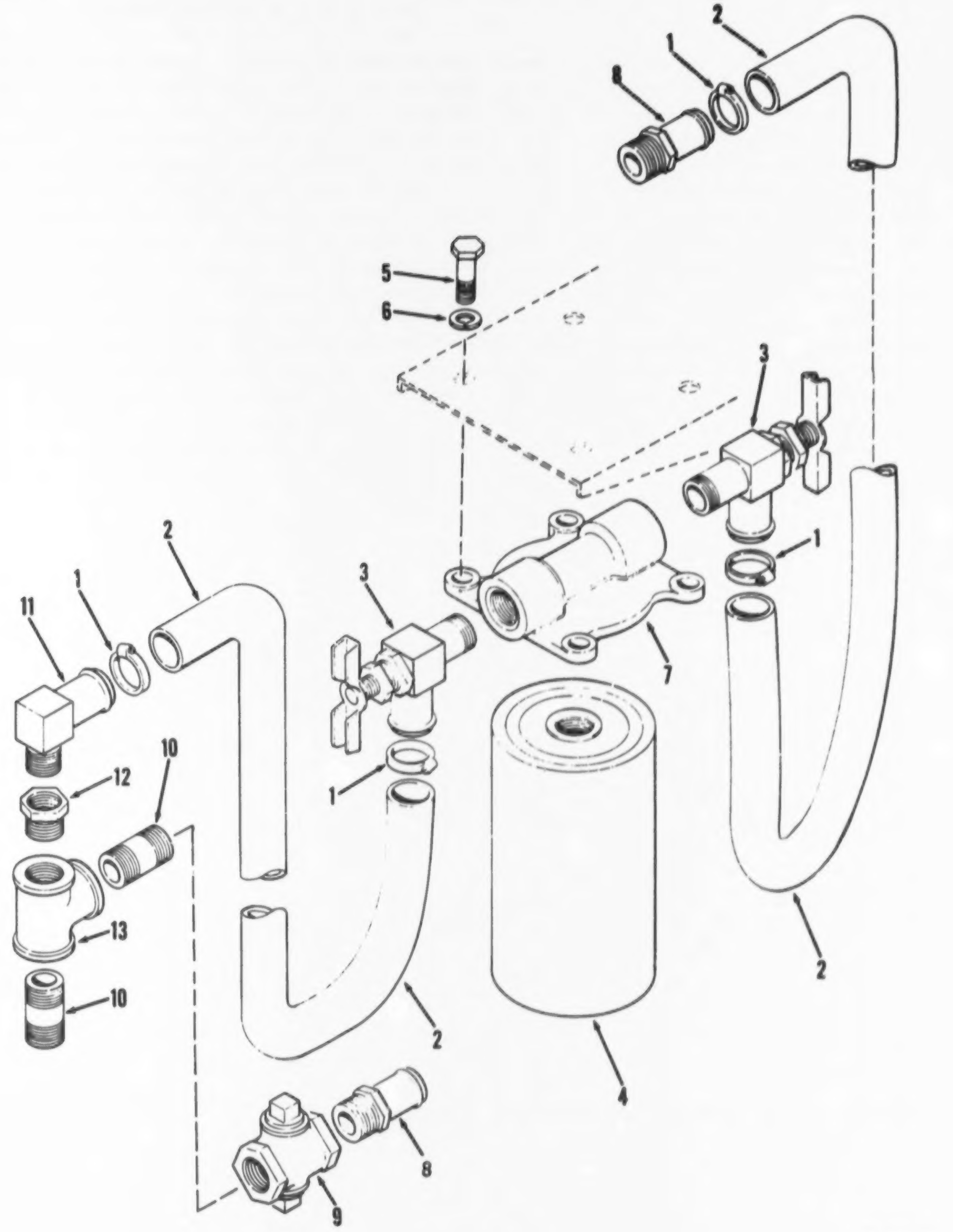

Figure 28. Water filter and hoses

(1) ILLUSTRATION (a) FIG NO.	(b) ITEM NO	(2) SMR CODE	(3) NATIONAL STOCK NUMBER	(4) PART NUMBER	(5) FSCM	(6) DESCRIPTION USABLE ON CODE	(7) U/M	(8) QTY INC IN UNIT
						FUNCTIONAL GROUP 16 WATER FILTER,ENGINE		
28	1	XB0ZZ		CP8	66295	..CLAMP,HOSE FILTER..	EA	4
28	2	XB0ZZ		447374050	27315	..HOSE RUBBER 3-8 ID 50 LG FILTER TO HEAD..................	FT	2
28	3	XB0ZZ	4820-00-076-8477	211280	79470	..COCK,DRAIN FILTER..	EA	2
28	4	XB0ZZ	4330-00-274-4712	WF2051	33457	.FILTER,WATER CRANE ENGINE INCL GASKET.....................	EA	1
28	5	XD0ZZ	5305-00-269-3214	MS90725-66	96906	..SCREW CAP HEXAGON 3-8-16X1-1-2 FILTER....................	EA	4
28	6	XD0ZZ	5310-00-637-9541	MS35338-46	96906	..WASHER LOCK 3-8 FILTER HEAD...............................	EA	4
28	7	XA0ZZ		204167	33457	.HEAD FILTER CRANE ENGINE....................................	EA	1
28	8	XB0ZZ		HT1C8	99103	..FITTING,HOSE HEATER HOSE...................................	EA	2
28	9	XB0ZZ		250-1-2	14959	..VALVE,SHUT OFF HEATER......................................	EA	2
28	10	XB0ZZ		93-100J4314	27315	..NIPPLE,PIPE 1-2 NPT SHORT HEATER TEE......................	EA	2
28	11	XB0ZZ		23916-6-8	99103	..FITTING,HOSE FILTER HOSE...................................	EA	1
28	12	XB0ZZ		49-100J4314	27315	..BUSHING,PIPE 3-4 X 1-2 TEE.................................	EA	1
28	13	XB0ZZ		67-100J4314	27315	..TEE,PIPE 1-2 FILTER & HEATER...............................	EA	1

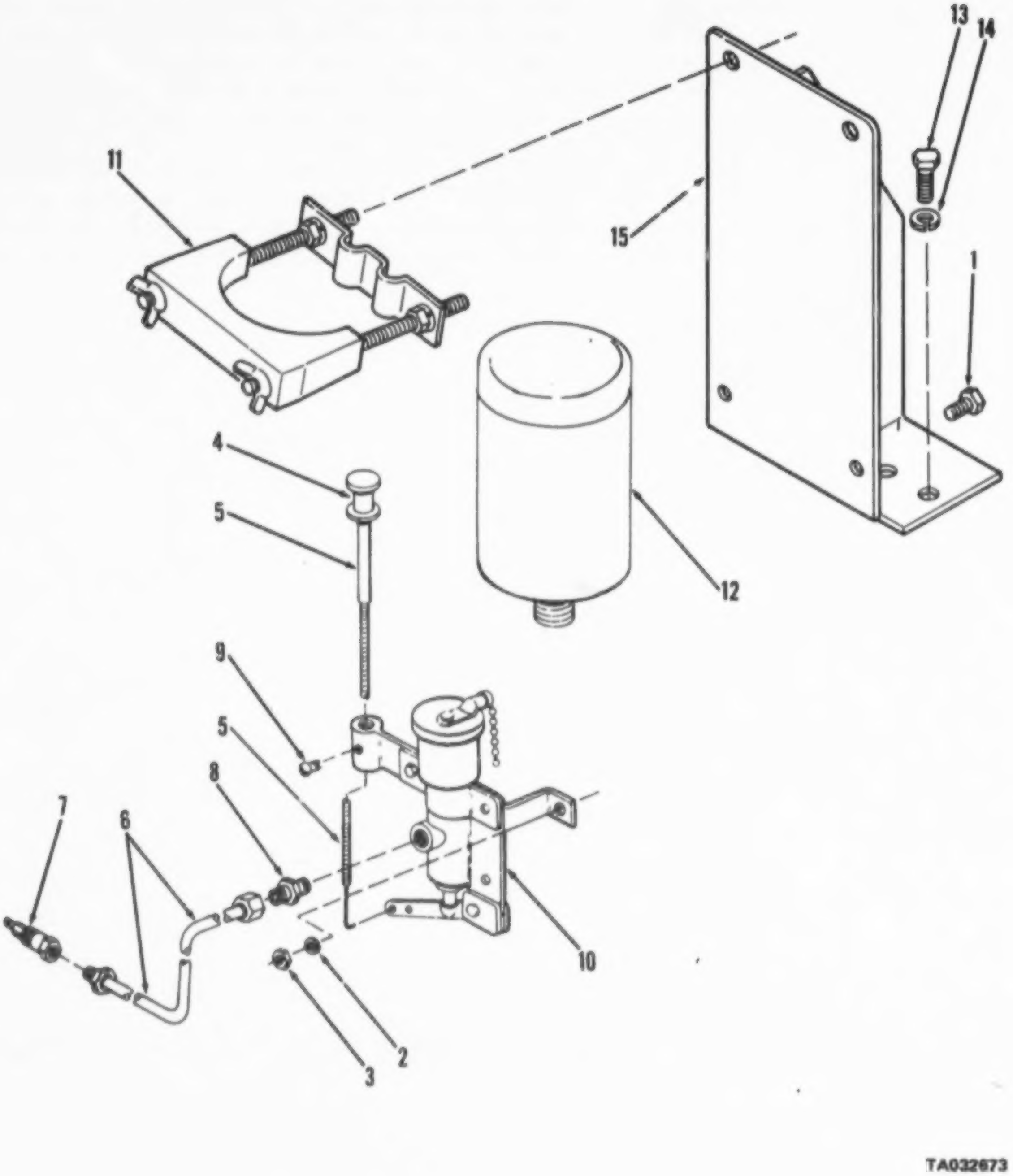

Figure 30. Starting aid, bracket and tube

(1) ILLUSTRATION (a) FIG NO.	(b) ITEM NO.	(2) SMR CODE	(3) NATIONAL STOCK NUMBER	(4) PART NUMBER	(5) FSCM	(6) DESCRIPTION USABLE ON CODE	(7) U/M	(8) QTY INC IN UNIT
						FUNCTIONAL GROUP 18 STARTING AID		
30	1	XDOZZ	5305-00-068-0501	MS90725-5	96906	.SCREW,CAP,HEXAGON 1-4-20X5-8 STARTING AID....................	EA	1
30	2	XDOZZ	5310-00-582-5965	MS35338-44	96906	.WASHER,LOCK 1-4 STARTING AID................................	EA	2
30	3	XDOZZ	5310-00-761-6882	MS51967-2	96906	.NUT,PLAIN,HEXAGON 1-4-20 STARTING AID.......................	EA	1
30	4	XBOZZ		84326744	41625	.KNOB,CABLE STARTING AID.....................................	EA	1
30	5	XBOZZ		2C848701-114	41625	.CABLE,PUSH-PULL STARTING AID 114 LG.........................	EA	1
30		XDOZZ		952267-879	61112	.STARTING AID CRANE ENGINE...................................	EA	1
30	6	PAOZZ	4720-00-462-0333	LP3239-48	61112	..TUBING,NONMETALLIC STARTING AID 48LG.......................	EA	1
30	7	PAOZZ	3815-00-085-4470	LP2773-11	61112	..FITTING,MANIFOLD STARTING AID..............................	EA	1
30	8	XBOZZ	4730-00-339-0714	LP482-1	61112	..FITTING,VALVE STARTING AID.................................	EA	1
30	9	XBOZZ	2990-00-633-5903	LP2814	61112	..SCREW,STOP STARTING AID....................................	EA	1
30	10	PAOZZ	2910-00-053-0500	LP3222-9	61112	..VALVE ASSY STARTING AID....................................	EA	1
30	11	XBOZZ		LP2299-1259-1	61112	..CLAMP,CYLINDER STARTING AID................................	EA	1
30	12	PAOZZ	2910-00-646-9727	MS26254	96906	..CARTRIDGE,ENGINE STARTING AID..............................	EA	1
30	13	XDOZZ	5305-00-942-2196	MS18154-60	96906	.SCREW,CAP,HEXAGON 3-8-16X1 BRACKET..........................	EA	2
30	14	XDOZZ	5310-00-637-9541	MS35338-46	96906	.WASHER,LOCK 3-8 BRACKET.....................................	EA	2
30	15	XBOZZ		16N1956	27315	.BRACKE START AID CRANE ENGINE...............................	EA	1

AMC FORM 1778, 1 OCT 73 (REPLACES AMC TEST FORMS 1753 AND 1754, 8 APR 70, WHICH WILL BE USED UNTIL 1 AUG 74)

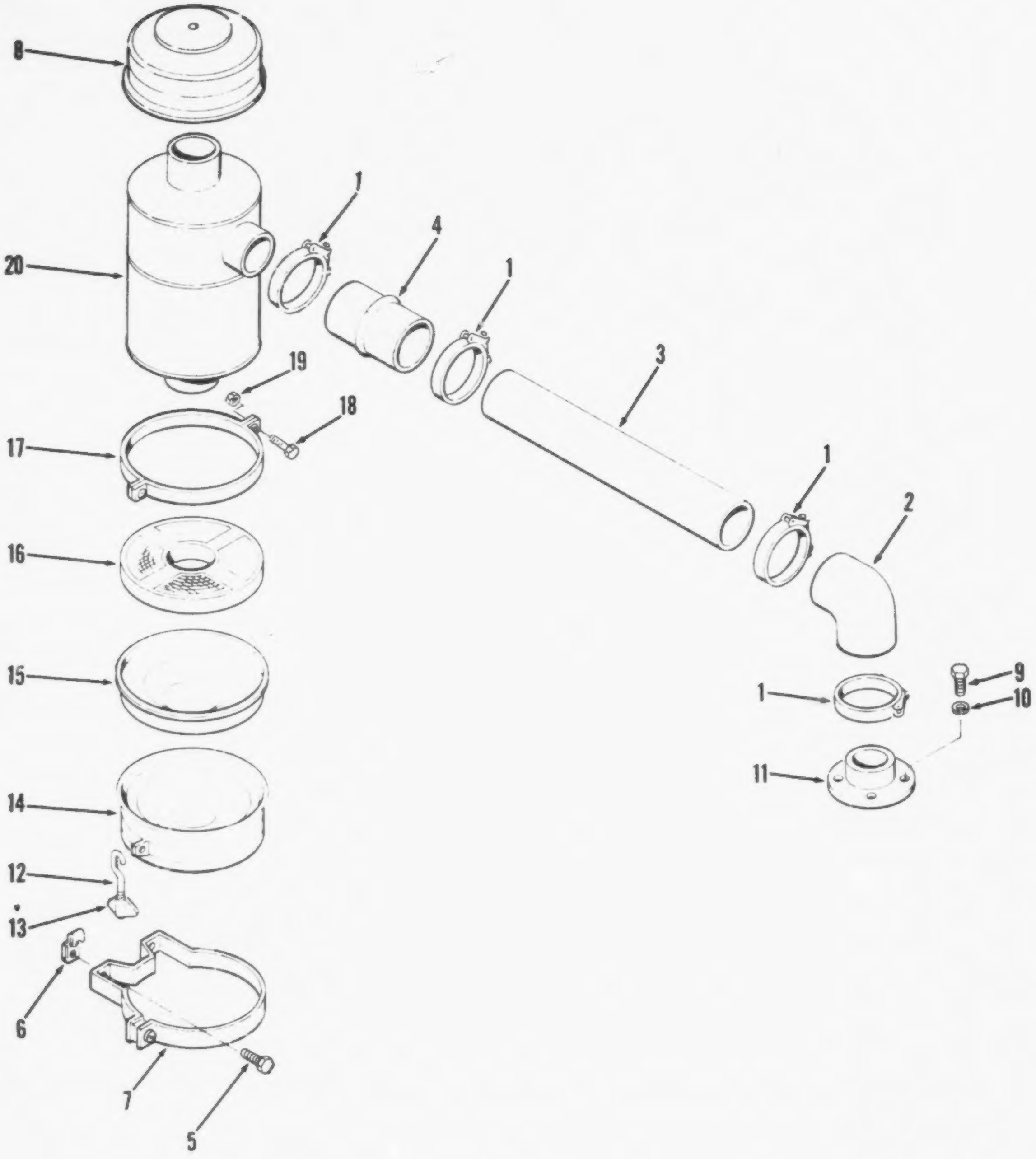

Figure 31. Cleaner assembly

(1) ILLUSTRATION (a) FIG NO.	(b) ITEM NO.	(2) SMR CODE	(3) NATIONAL STOCK NUMBER	(4) PART NUMBER	(5) FSCM	(6) DESCRIPTION USABLE ON CODE	(7) U/M	(8) QTY INC IN UNIT
						FUNCTIONAL GROUP 19 AIR CLEANER		
31	1	XBOZZ	4730-00-951-6658	MS21920-37	96906	.CLAMP,HOSE AIR CLEANER	EA	4
31	2	XBOZZ	4720-00-477-3301	P10-5533	18265	.HOSE,PREFORMED AIR CLEANER	EA	1
31	3	XDOZZ		14T1663	27315	.TUBE,AIR CRANE ENGINE	EA	1
31	4	XBOZZ	4720-01-046-8844	P10-5609	18265	.HOSE,RUBBER AIR CLEANER	EA	1
31	5	XDOZZ	5305-00-269-3209	MS90725-58	96906	.SCREW CAP HEXAGON 3-8-16X3-4 AIR CLEANER MTG	EA	4
31	6	XBOZZ		C30584-3816	78553	.NUT,CAGE 3-8-16 AIR CLEANER MTG	EA	4
31	7	XDOZZ		5165800	72582	.STRAP,MOUNTING AIR CLEANER	EA	2
31	8	XDOZZ		9241663	72582	.PRECLEANER,AIR CRANE ENGINE	EA	1
31	9	XDOZZ	5306-00-226-4826	MS90728-33	96906	.BOLT,MACHINE 5-16-18X1 ADAPTER	EA	4
31	10	XDOZZ	5310-00-407-9566	MS35338-45	96906	.WASHER,LOCK 5-16 ADAPTER	EA	4
31	11	XDOZZ		5122195	27315	.ADAPTER,AIR INLET HSG	EA	1
31		XDOZZ		FG12-7290	18265	.AIR CLEANER ASSY CRANE ENGINE	EA	1
31		XDOZZ	5306-00-730-9096	P16731	18265	..BOLT,HOOK AIR CLEANER	EA	2
31	12	XBOZZ		P4155	18265	...NUT WING AIR CLEANER	EA	1
31	13	XBOZZ		P16732	18265	...BOLT,EYE AIR CLEANER	EA	1
31	14	XDOZZ		P16729	18265	..CUP,OIL AIR CLEANER	EA	1
31	15	XDOZZ		P16727	18265	..CUP,INNER AIR CLEANER	EA	1
31	16	XBOZZ		P01-6735	18265	..ELEMENT ASSY AIR CLEANER	EA	1
31	17	XBOZZ		P10-1467	18265	..BAND ASSY AIR CLEANER	EA	1
31	18	XDOZZ	5305-00-984-5690	MS35206-300	96906	...SCREW,MACHINE BAND AIR CLEANER	EA	1
31	19	XBOZZ	5310-00-118-2034	P5301	18265	...NUT,PLAIN SQUARE BAND AIR CLEANER	EA	1
31	20	XDOZZ		P16718	18265	..BODY CLEANER AIR CRANE ENGINE	EA	1

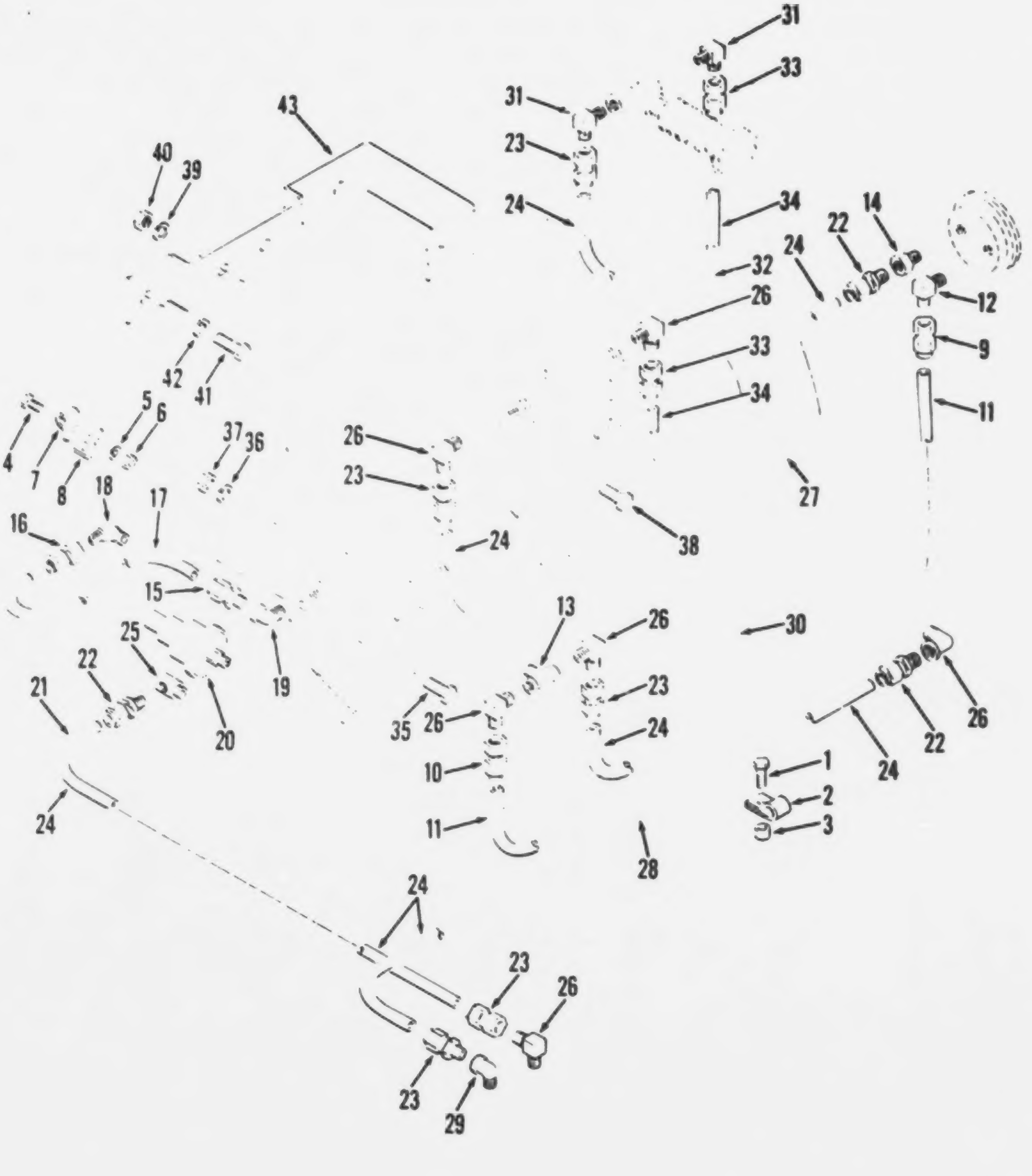

TA032675

Figure 32. Engine fuel hoses

(1) ILLUSTRATION (a) FIG NO.	(b) ITEM NO.	(2) SMR CODE	(3) NATIONAL STOCK NUMBER	(4) PART NUMBER	(5) FSCM	(6) DESCRIPTION USABLE ON CODE	(7) U/M	(8) QTY INC IN UNIT
						FUNCTIONAL GROUP 20 FUEL LINES,PUMP,TANK, AND FITTINGS,ENGINE		
32	1	XDOZZ	5305-00-942-2196	MS18154-60	96906	.SCREW,CAP,HEXAGON 3-8-16X1 CLAMP	EA	1
32	2	XBOZZ	5340-00-323-1624	5133108	72582	.CLAMP,LOOP FUEL PUMP HOSE	EA	1
32	3	XBOZZ		5164789	72582	.SPACER,CLAMP FUEL PUMP HOSE	EA	1
32	4	XDOZZ	5305-00-269-2800	MS90726-57	96906	.SCREW,CAP,HEXAGON CLAMP	EA	1
32	5	XDOZZ	5310-00-637-9541	MS35338-46	96906	.WASHER,LOCK CLAMP	EA	1
32	6	XDOZZ	2530-00-096-5631	117045	97907	.NUT,PLAIN,HEXAGON CLAMP	EA	1
32	7	XBOZZ	5340-00-720-6213	MS21333-55	96906	.CLAMP,LOOP MANIFOLD HOSE	EA	1
32	8	XBOZZ		5178595	72582	.BRACKET,CLAMP MANIFOLD HOSE	EA	1
32	9	XDOZZ	4730-00-229-3466	5199593	72582	.ELBOW,TUBE TO HOSE 5-8-18 MALE PUMP HOSE	EA	1
32	10	XDOZZ	4730-01-028-5038	5195579	72582	.FITTING,HOSE 5-8-18 MALE STRAIGHT FILTER	EA	1
32	11	PCOZZ	4720-00-485-7167	5195575	72582	.HOSE,NONMETALLIC NO 6 HOSE 19 LG FUEL	FT	1
32	12	XBOZZ	4730-00-277-8274	137423	72582	.ELBOW,PIPE TO TUBE FUEL PUMP	EA	1
32	13	XBOZZ	4730-01-032-5641	5127510	72582	.TEE,PIPE FUEL FILTER	EA	1
32	14	XBOZZ	4730-00-289-1254	137407	72582	.ADAPTER,STRAIGHT FUEL PUMP	EA	1
32	15	XDOZZ	4730-01-028-5038	5199579	72582	.FITTING,HOSE 5-8-18 MANIFOLD	EA	1
32	16	XDOZZ	4730-00-233-5988	5195589	72582	.ELBOW,TUBE TO HOSE 5-8-18 MALE FUEL	EA	1
32	17	PCOZZ	4720-00-485-7167	5199575	72582	.HOSE:FUEL NO.6,28 IN. LG. MANIFOLD	FT	1
32	18	XBOZZ	4730-00-277-8274	137423	72582	.ELBOW,PIPE TO TUBE MANIFOLD	EA	1
32	19	XBOZZ	4730-00-289-1254	137407	72582	.ADAPTER,STRAIT PIPE FILTER	EA	1
32	20	PAOZZ	5930-00-944-1660	MS90530-1	96906	.SWITCH,PRESSURE FUEL PRESSURE	EA	1
32	21	MFOZZ		44P135702	27315	.HOSE ASSY FUEL RETURN	EA	1
32	25	XBOZZ	4730-00-080-7023	5127511	72582	.ELBOW,PIPE 1-4-18 FUEL TANK	EA	1
32	26	PAOZZ	4730-00-239-1135	C3409X4	79470	.ELBOW,PIPE 1-4-18 FUEL TANK	EA	3
32	27	MFOZZ		44P135703	27315	HOSE ASSY FUEL PUMP TO STRAINER : COMPONENTS SAME AS HOSE .HOSE ASSY FUEL PUMP TO STRAINER :	EA	1
32	28	MFOZZ		44P135701	27315	HOSE ASSY TANK TO STRAINER : COMPONENTS SAME AS HOSE ASSY - .HOSE ASSY TANK TO STRAINER : COMPONENTS	EA	1
32	29	XBOZZ	4730-00-595-0385	8165127	18876	.ELBOW,PIPE 1-8NPT FUEL TANK	EA	1
32	30	MFOZZ		44P47309	27315	HOSE ASSY FILTER TO PRIMER PUMP : COMPONENTS SAME AS HOSE .HOSE ASSY FILTER TO PRIMER PUMP :	EA	1
32	31	XDOZZ	4730-00-647-3207	2024-2-4S	00624	.ELBOW,PIPE TO TUBE 1-8NPT PRIMER PUMP	EA	2
32	32	MFOZZ		44P47308	27315	.HOSE ASSY PUMP TO STRAINER	EA	1
32	33	XBOZZ	4730-01-031-9264	FC2515-C4C4S	00624	..FITTING,HOSE,PRIMER 7-16-20 FEMALE	EA	2
32	35	XDOZZ	5305-00-269-3214	MS90725-64	96906	.SCREW,CAP,HEXAGON 3-8-16-1-1-2 FILTER	EA	2
32	36	XDOZZ	5310-00-637-9541	MS35338-46	96906	.WASHER,LOCK 3-8 FILTER	EA	2
32	37	XBOZZ	5310-00-732-0558	MS51967-8	96906	.NUT,PLAIN,HEXAGON 3-8-16-FILTER	EA	2
32	38	XDOZZ	5305-00-269-3211	MS90725-60	96906	.SCREW,CAP,HEXAGON 3-8-16X1 FUEL STRAINER	EA	2
32	39	XDOZZ	5310-00-637-9541	MS35338-46	96906	.WASHER,LOCK 3-8 FUEL STRAINER	EA	2
32	40	XDOZZ	5310-00-732-0558	MS51967-8	96906	.NUT,PLAIN,HEXAGON 3-8-16 FUEL STRAINER	EA	2

(1) ILLUSTRATION (a) FIG NO.	(b) ITEM NO.	(2) SMR CODE	(3) NATIONAL STOCK NUMBER	(4) PART NUMBER	(5) FSCM	(6) DESCRIPTION USABLE ON CODE	(7) U/M	(8) QTY INC IN UNIT
32	41	XDOZZ	5305-00-069-5571	MS90725-83	96906	.SCREW,CAP,HEXAGON 7-16-14X3-4 BRACKET........................	EA	2
32	42	XDOZZ	5310-00-209-0965	MS35338-47	96906	.WASHER,LOCK 7-16 BRACKET..................................	EA	2
32	43	XBOZZ		16P3862	27315	.BRACKET,FILTER CRANE ENGINE..............................	EA	1

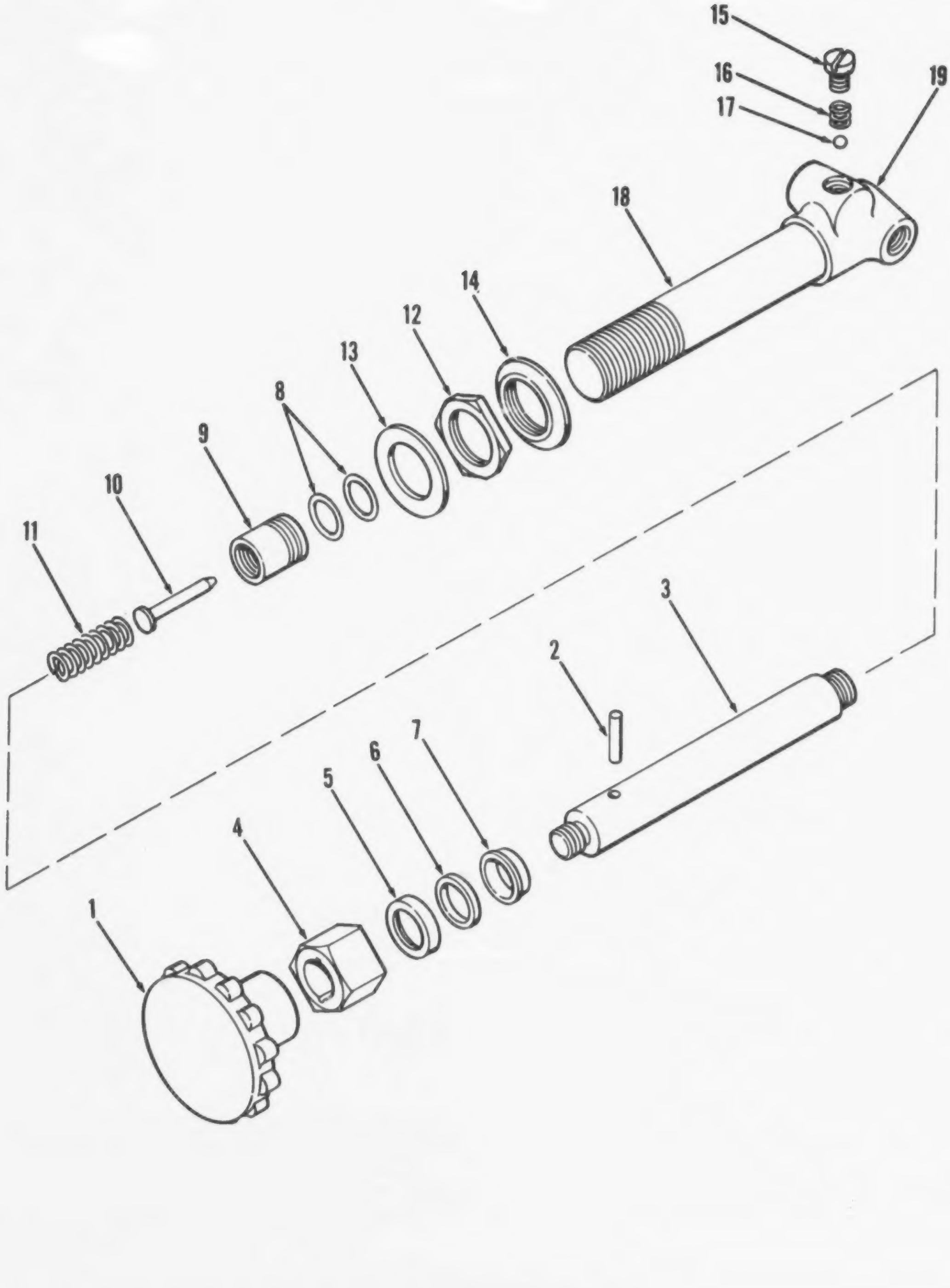

Figure 33. Pump assembly, primer

(1) ILLUSTRATION (a) FIG NO.	(b) ITEM NO.	(2) SMR CODE	(3) NATIONAL STOCK NUMBER	(4) PART NUMBER	(5) FSCM	(6) DESCRIPTION USABLE ON CODE	(7) U/M	(8) QTY INC IN UNIT
						FUNCTIONAL GROUP 20 FUEL LINES,PUMP,TANK, AND FITTINGS,ENGINE		
33		PBOZZ	2910-01-031-9265	K24C5-1-886	55469	.PRIMER ASSY,ENGINE CRANE ENGINE..............................	EA	1
33		PAOZZ		A9340	34199	.PISTON ASSEMBLY PRIMER PUMP..............................	EA	1
33		XAOZZ		A9347	34199	..KNOB AND PISTON PUMP..............................	EA	1
33	1	PAOZZ	5355-01-030-7552	A4190	55469	...KNOB,PUMP,PRIMER PRIMER..............................	EA	1
33		XAOZZ		A9346	34199	...ROD AND PIN PRIMER PUMP..............................	EA	1
33	2	XAOZZ		A9345	34199	....PIN,STOP PRIMER PUMP..............................	EA	1
33	3	XAOZZ		A8683	34199	....ROD,PISTON PRIMER PUMP..............................	EA	1
33	4	XAOZZ		A9341	34199	...NUT,LOCK,PISTON PRIMER PUMP..............................	EA	1
33	5	XAOZZ		A9482	34199	...COLLAR,GUIDE PRIMER PUMP..............................	EA	1
33	6	XBOZZ		A9481	34199	...SEAL,DUST PRIMER PUMP..............................	EA	1
33	7	XAOZZ		A9480	34199	...GUIDE,PISTON PRIMER PUMP..............................	EA	1
33	8	PAOZZ	5330-00-606-6734	A585	55469	...PACKING,PREFORMED PRIMER PUMP..............................	EA	1
33	9	XAOZZ		A1980	34199	...NUT,SEAL PRIMER PUMP..............................	EA	1
33	10	XAOZZ		A570	34199	...PIN,SEALING PRIMER PUMP..............................	EA	1
33	11	XAOZZ		A8679	34199	...SPRING,HELICAL PRIMER PUMP..............................	EA	1
33	12	XAOZZ		A1981	34199	..NUT,LOCKING PRIMER PUMP MTG..............................	EA	3
33	13	XAOZZ		A1985	34199	..WASHER,FLAT PRIMER PUMP MTG..............................	EA	3
33	14	XAOZZ		A1982	34199	..NUT,MOUNTING PRIMER PUMP..............................	EA	1
33		XAOZZ		A4941	55469	..BODY ASSY PRIMER PUMP..............................	EA	1
3	15	XAOZZ		A1978	55469	...RETAINER VALVE PRIMER PUMP..............................	EA	1
33	16	XAOZZ		A572	55469	...SPRING,HELICAL CHECK VALVE..............................	EA	2
33	17	XAOZZ		A5744	55469	...BALL BEARING CHECK VALVE..............................	EA	2
33		XAOZZ		A7765	55469	...BODY AND BARREL PRIMER PUMP..............................	EA	1
33	18	XAOZZ		A1986	55469	...BARREL PISTON PRIMER PUMP..............................	EA	1
33	19	XAOZZ		A1987	55469	...BODY,PUMP PRIMER..............................	EA	1

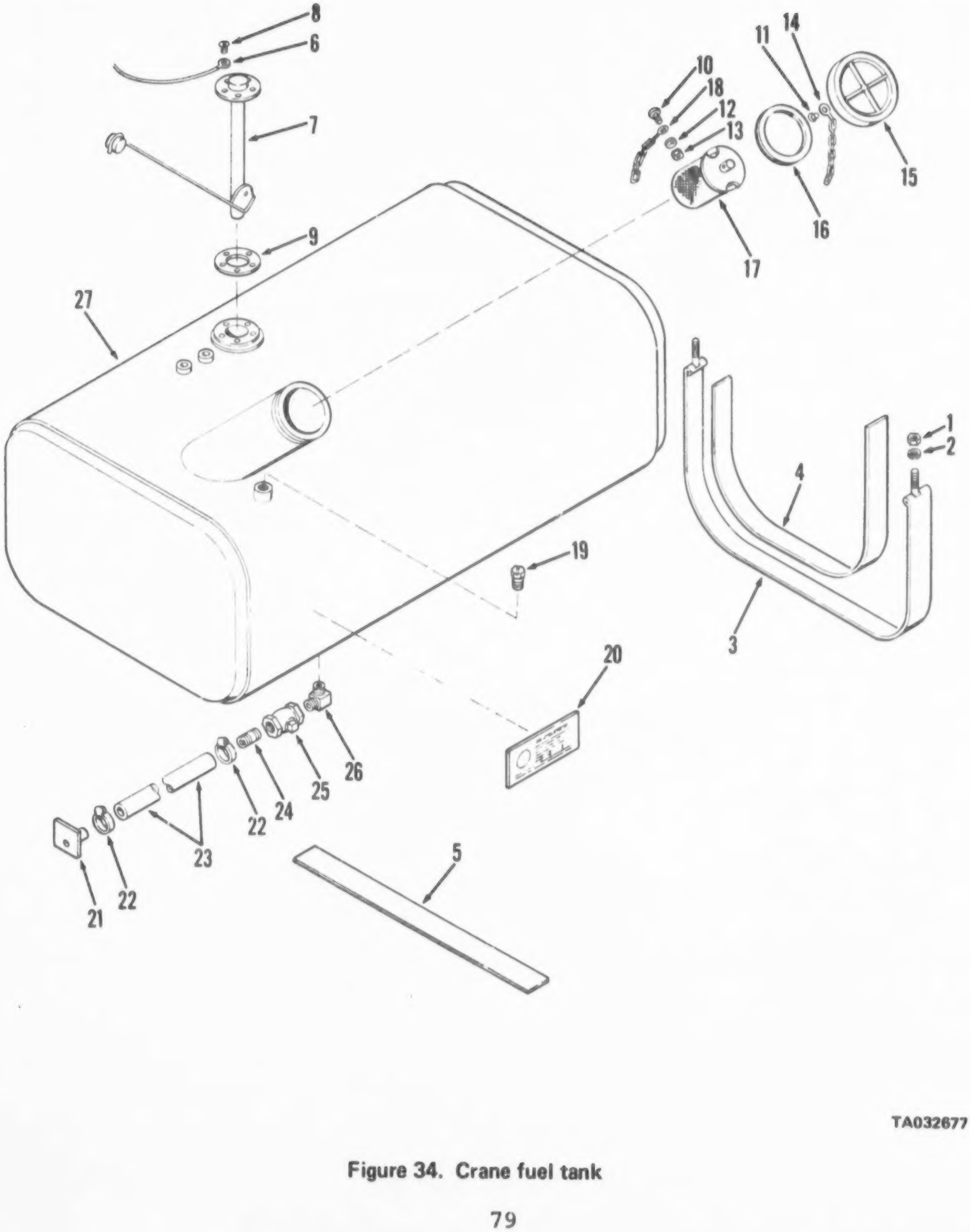

Figure 34. Crane fuel tank

(1) ILLUSTRATION (a) FIG NO.	(b) ITEM NO.	(2) SMR CODE	(3) NATIONAL STOCK NUMBER	(4) PART NUMBER	(5) FSCM	(6) DESCRIPTION USABLE ON CODE	(7) U/M	(8) QTY INC IN UNIT
						FUNCTIONAL GROUP 20 FUEL LINES,PUMP,TANK, AND FITTINGS,ENGINE		
34	1	XBOZZ		NT8463	75497	.NUT,SELF-LOCKING 1-4-20 FUEL TANK...........................	EA	4
34	2	XBOZZ	5310-00-805-5998	MS27183-18	96906	.WASHER,FLAT 1-4 FUEL TANK...................................	EA	4
34	3	XBOZZ		162416	27315	.STRAP FUEL TANK MOUNTING....................................	EA	2
34	4	XBOZZ		2920	98440	.STRIP CHAFING 22 LG TANK STRAP..............................	FT	2
34	5	XBOZZ		168-100J4314	27315	.STRIP NEOPRENE 22 LG TANK BOTTOM............................	FT	3
34	6	XBOZZ		169-100J4314	27315	.LEAD ELECTRICAL TRANSMITTER GROUNDING.......................	EA	1
34	7	XBOZZ		FS507CA	57733	.TRANSMITTER FL FUEL LEVEL...................................	EA	1
34	8	XBOZZ	5305-00-121-2705	1428	98440	..SCREW MACHINE 10-32X1-2 TRANSMITTER........................	EA	5
34	9	PAOZZ	5330-00-119-4842	2013	98440	..GASKET FUEL TANK...	EA	1
34		XAOZZ		F6340-2	98440	..FILLER ASSEMBLY FUEL TANK..................................	EA	1
34	10	XBOZZ		2876-15	98440	...SCREW,DRIVE CHAIN...	EA	1
34	11	XBOZZ		2876-14	98440	...SCREW,MACHINE 10-32X7-16,CHAIN............................	EA	1
34	12	PAOZZ	5310-00-038-9863	2877-1	98440	...WASHER,LOCK NO 10 CHAIN...................................	EA	1
34	13	PAOZZ	5310-00-252-5996	2879-9	98440	...NUT,PLAIN,HEXAGON 10-32 CHAIN.............................	EA	1
34	14	XBOZZ		BC6340	98440	...CHAIN,LINK 16 LG BRASS SCREEN.............................	FT	1
34	15	XBOZZ		1517WFM	98440	...CAP,FILLER FUEL TANK......................................	EA	1
34	16	XAOZZ		1505	98440	...GASKET,CAP FUEL TANK......................................	EA	1
34	17	PAOZZ	2910-00-404-7296	SA6340	98440	...SCREEN,FILLER FUEL TANK...................................	EA	1
34	18	PAOZZ		BC6340	98440	...CHAIN,LINK 12 LG BRASS SCREEN.............................	FT	1
34	19	XAOZZ		FS6A188	75833	..VENT,FUEL TANK BRASS.......................................	EA	1
34	20	XDOZZ		6448	98440	..LABEL FHWA FUEL TANK.......................................	EA	1
34	21	XAOZZ		18T11215	27315	..PLATE,BULKHEAD DRAIN WELDED TO FRAME.......................	EA	1
34	22	XBOZZ		32Q23108	27315	..CLAMP,HOSE DRAIN...	EA	2
34	23	XBOZZ		200P7D12	27315	.HOSE,RUBBER 3-4 10X17 LG....................................	EA	1
34	24	XBOZZ		2420V105	27315	.PIPE,NIPPLE 1-2NPT DRAIN....................................	EA	1
34	25	XBOZZ		36Z38	27315	.COCK,DRAIN FUEL TANK..	EA	1
34	26	XBOZZ		447118406	27315	.ELBOW,PIPE TANK DRAIN.......................................	EA	1
34	27	XAOZZ		6449-1	98440	.TANK,FUEL CRANE...	EA	1

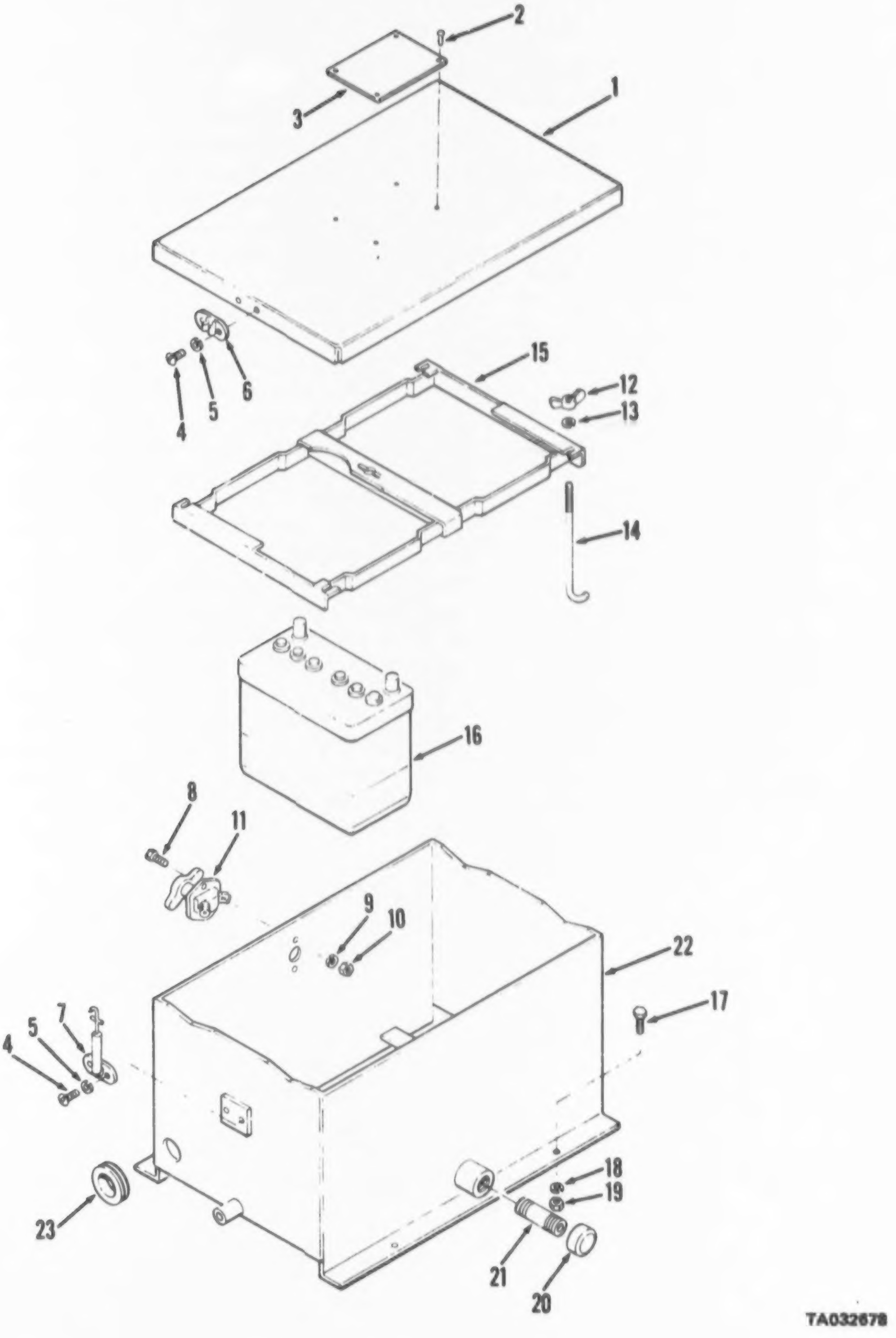

Figure 35. Batteries and box

(1) ILLUSTRATION (a) FIG NO.	(b) ITEM NO.	(2) SMR CODE	(3) NATIONAL STOCK NUMBER	(4) PART NUMBER	(5) FSCM	(6) DESCRIPTION USABLE ON CODE	(7) U/M	(8) QTY INC IN UNIT
						FUNCTIONAL GROUP 21 BATTERIES		
35	1	XDOZZ		16P3060	27315	.COVER,BATTERY CRANE..	EA	1
35	2	PAOZZ	5320-00-682-1862	MS16535-114	96906	..RIVET,TUBULAR 123X11-64 PLATE..............................	MX	4
35	3	XDOZZ		320483	27315	..PLATE,INSTRUCTION BATTERY CONNECTIONS......................	EA	1
35	4	XBOZZ		MS35206-263	96906	..SCREW,MACHINE: 10- X 3/8,LATCH.............................	EA	4
35	5	XBOZZ	5310-00-045-3296	MS35338-43	96906	.WASHER,LOCK NO 10 LATCH.....................................	EA	4
35		PAOZZ	5340-00-402-5927	9646	19220	.LATCH ASSY BATTERY,COVER....................................	EA	2
35	6	XAOZZ		9646-50	19220	..HANDLE,LATCH COVER...	EA	1
35	7	XDOZZ		96463	19220	..LATCH,COVER BATTERY..	EA	1
35	8	XBOZZ	5305-00-068-0501	MS90725-5	96906	.SCREW,CAP,HEXAGON 1-4-20X5-8 SWITCH.........................	EA	2
35	9	XBOZZ	5310-00-582-5965	MS35338-44	96906	.WASHER,LOCK 1-4 SWITCH......................................	EA	2
35	10	XBOZZ	5310-00-761-6882	MS51967-2	96906	.NUT,PLAIN,HEXAGON 1-4-20 SWITCH.............................	EA	2
35	11	PAOZZ	5930-00-930-5018	MS27200-1	96906	.SWITCH,PULL PULL BATTERY DISCONNECT.........................	EA	1
35	12	XDOZZ		MS35245-18	96906	.NUT,PLAIN,WING BATTERY RETAINER.............................	EA	5
35	13	XBOZZ	5310-00-637-9541	MS35338-46	96906	.WASHER,LOCK 3-8 BATTERY RETAINER............................	EA	5
35	14	XDOZZ		20T8068	27315	.BOLT,HOOK BATTERY RETAINER..................................	EA	5
35	15	XDOZZ	2590-00-040-2187	MS53046-3	96906	.RETAINER,BATT CRANE...	EA	1
35	16	PAOZA	6140-00-057-2554	MS35000-3	96906	.BATTERY,ELECTRIC: 6 TN,12 VOLT,CRANE........................	EA	2
35	17	PAOZZ	5305-00-115-9526	5509	11083	.SCREW,CAP,HEXAGON 3-8-16X3-4 BATTERY CASE...................	EA	4
35	18	PAOZZ	5310-00-637-9541	MS35338-46	96906	.WASHER,LOCK 3-8 BATTERY CASE................................	EA	4
35	19	PAOZZ	5310-00-732-0558	MS51967-8	96906	.NUT,PLAIN,HEXAGON 3-8-16 BATTERY CASE.......................	EA	4
35	20	XBOZZ		24C4V004	27315	.CAP,PIPE 1-2NPT BOX DRAIN...................................	EA	1
35	21	XBOZZ		2420V121	27315	.NIPPLE,PIPE 1-2NPTX6L BOX DRAIN.............................	EA	1
35	22	XDOZZ		16N1911-1	27315	.CASE,BATTERY CRANE..	EA	1
35	23	PCOZZ	5325-00-285-3345	MS35489-56	96906	..GROMMET,RUBBER BATTERY CASE................................	EA	1

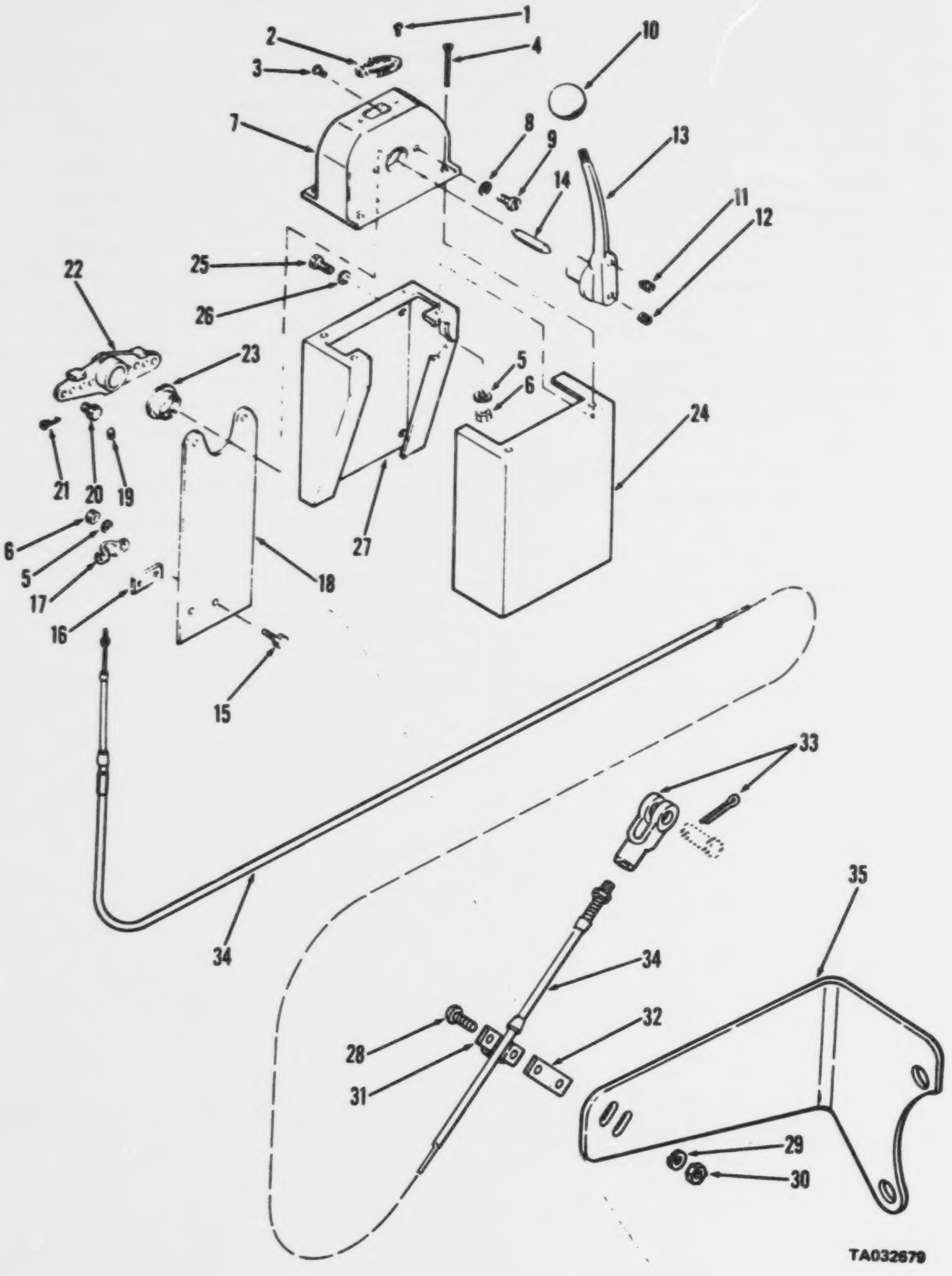

Figure 36. Throttle assembly

(1) ILLUSTRATION (a) FIG NO.	(b) ITEM NO.	(2) SMR CODE	(3) NATIONAL STOCK NUMBER	(4) PART NUMBER	(5) FSCM	(6) DESCRIPTION USABLE ON CODE	(7) U/M	(8) QTY INC IN UNIT
						FUNCTIONAL GROUP 22 THROTTLE AND RADIATOR SHUTTER CONTROLS, ENGINE CRANE		
36		PAOZZ	2910-00-403-5504	04466C	41625	.THROTTLE ASSEMBLY HAND CRANE ENGINE	EA	1
36	1	XBOZZ	5305-00-984-4983	MS35206-226	96906	..SCREW,MACHINE 6-32X1-4 PLATE	EA	2
36	2	XBOZZ		A21256	41625	..PLATE,IDENT THROTTLE ASSY	EA	1
36	3	XBOZZ	5305-00-989-7434	MS35207-263	96906	..SCREW,MACHINE 10-32X1-2 BEARING	EA	2
36	4	XBOZZ	5305-00-957-6647	MS35190-274	96906	..SCREW,MACHINE 10-24X3-4 HOUSING	EA	4
36	5	XBOZZ	5310-00-045-3296	MS35338-43	96906	..WASHER,LOCK NO 10 HOUSING	EA	6
36	6	XBOZZ	5310-00-934-9758	MS35649-202	96906	..NUT,PLAIN,HEXAGON 10-24 HOUSING	EA	6
36	7	XAOZZ		D31030-4	41625	..HOUSING THROTTL HANGER PLATE	EA	1
36	8	XBOZZ	5310-00-411-5251	A41640	41625	..WASHER,LOCK HANGER PLATE	EA	2
36	9	XBOZZ	5305-00-465-5856	0637V058	27315	..SCREW MACHINE 10-32X5-8 FIL HD HANGAR	EA	2
36	10	PAOZZ	5355-00-765-5688	A35232-4	41625	..KNOB HAND THOTTLE	EA	1
36	11	PAOZZ	5305-00-680-2334	A35257	41625	..SETSCREW LEVER	EA	1
36	12	XBOZZ		A25319-1	41625	..SCREW LEVER MOUNTING	EA	1
36	13	XAOZZ		D21572-5	41625	..LEVER CONTROL THROTTLE	EA	1
36	14	XBOZZ		A31039	41625	..SHAFT LEVER THROTTLE	EA	1
36	15	XBOZZ	5306-00-656-0358	AN3-6A	88044	..BOLT,MACHINE 10-24X3-8 CLAMP	EA	2
36	16	XBOZZ		A31538	41625	..SHIM CLAMP CABLE	EA	1
36	17	PAOZZ	2030-00-933-1630	A31505	41625	..CLAMP CABLE	EA	1
36	18	XBOZZ		B38104	41625	..PLATE HANGER THROTTLE CONTROL	EA	1
36	19	XBOZZ		B29458	41625	..SETSCREW LEVER THROTTLE	EA	1
36	20	PAOZZ	5315-00-232-0941	A31025	41625	..PIN,STRAIGHT,HEADED THROTTLE	EA	1
36	21	PAOZZ	5315-00-839-2326	MS24665-281	96906	..PIN,COTTER 3-32X1-2 THROTTLE SCREW	EA	1
36	22	XAOZZ		D32634	41625	..LEVER OPERATING THROTTLE	EA	1
36	23	PAOZZ	3120-00-368-6304	A32660	41625	..BEARING SLEEVE THROTTLE LEVER	EA	1
36	24	XAOZZ		16P2818	27315	.COVER THROTTLE CRANE	EA	1
36	25	XBOZZ	5305-00-984-5685	MS35206-309	96906	.SCREW MACHINE 3-8-16X3-4 SUPPORT	EA	3
36	26	XBOZZ	5310-00-824-4542	RS80325MSC	73484	.WASHER SEALANT THROTTLE SUPPORT	EA	2
36	27	XBOZZ		16P2810	27315	.SUPPORT THROTTLE CRANE	EA	1
36	28	XBOZZ	5305-00-993-1848	MS35207-265	96906	.SCREW MACHINE 10-32X3-4 CLAMP	EA	2
36	29	XBOZZ	5310-00-045-3296	MS35338-43	96906	.WASHER,LOCK NO 10 CLAMP	EA	2
36	30	XBOZZ	5310-00-934-9751	MS35650-302	96906	.NUT,PLAIN,HEXAG 10-32 CLAMP	EA	1
36	31	XBOZZ		A32010	41625	.CLAMP CABLE THROTTLE CABLE	EA	1
36	32	XBOZZ		A35777	41625	.SHIM CLAMP CABLE CLAMP	EA	1
36	33	XBOZZ		A33395	41625	.CLEVIS ROD END THROTTLE CABLE INCL PIN	EA	1
36	34	XBOZZ		32C216	41625	.CABLE THROTTLE 216 LG CRANE	EA	1
36	35	XBOZZ		16P3868	27315	.BRACKET CABLE CRANE ENGINE	EA	1

best copy available

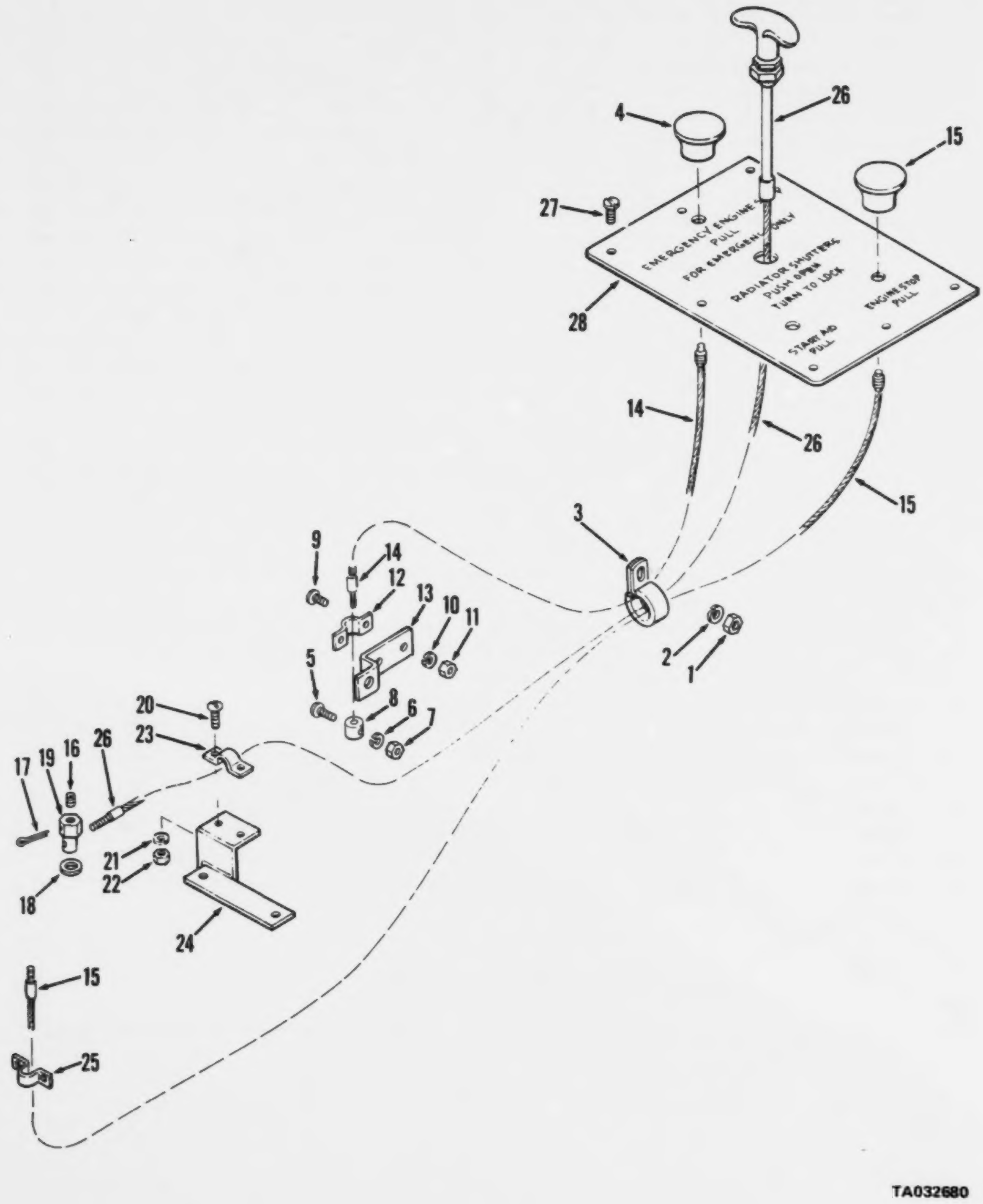

Figure 37. Cables, emergency stop, radiator shutters and engine stop

(1) ILLUSTRATION (a) FIG NO.	(b) ITEM NO.	(2) SMR CODE	(3) NATIONAL STOCK NUMBER	(4) PART NUMBER	(5) FSCM	(6) DESCRIPTION USABLE ON CODE	(7) U/M	(8) QTY INC IN UNIT
						FUNCTIONAL GROUP 22 THROTTLE AND RADIATOR SHUTTER CONTROLS, ENGINE CRANE		
37	1	XBOZZ	5310-00-732-0558	MS51967-8	96906	.SCREW CAP HEXAGON 3-8-16 CLAMP	EA	2
37	2	XBOZZ	5310-00-637-9541	MS35338-46	96906	.WASHER,LOCK 3-8 CLAMP	EA	1
37	3	XBOZZ	5340-00-404-4098	COV1713	75272	.CLAMP LOOP CUSH CONTROL CABLES	EA	2
37	4	XBOZZ		84434348	41625	.KNOB CABLE EMERGENCY STOP	EA	1
37	5	XBOZZ	5305-00-984-6191	MS35206-243	96906	.SCREW,MACHINE 8-32X3-8 STOP	EA	1
37	6	XBOZZ	5310-00-045-3299	MS35338-42	96906	.WASHER LOCK NO 8 STOP	EA	1
37	7	XBOZZ	5310-00-934-9757	MS35649-282	96906	.NUT,PLAIN,HEXAG 8-32 STOP	EA	1
37	8	XBOZZ		818T121	27315	.STOP CABLE EMERGENCY STOP	EA	1
37	9	XBOZZ	5305-00-993-1848	MS35207-265	96906	.SCREW,MACHINE 10-32X3-4 CLAMP	EA	2
37	10	PAOZZ	5310-00-045-3296	MS35338-43	96906	.WASHER,LOCK NO 10 CLAMP	EA	1
37	11	XBOZZ	5310-00-934-9751	MS35650-302	96906	.NUT,PLAIN,HEXAG 10-32 CLAMP	EA	2
37	12	XBOZZ		A45202	41625	.CLAMP CABLE EMERGENCY STOP	EA	1
37	13	XBOZZ		16T4090	27315	.BRACKET CABLE EMERGENCY STOP	EA	1
37	14	XBOZZ		20B48701-138	41625	.CABLE EMER STOP CRANE ENGINE	EA	1
37	15	XBOZZ		84326742	41625	.KNOB ENGINE STP CABLE	EA	1
37	16	PAOZZ	5305-00-272-3533	MS51023-49	96906	.SETSCREW 10-32X1-2 HEX SOCKET CUP PT	EA	1
37	17	PAOZZ	5315-00-842-3044	MS24665-283	96906	.PIN,COTTER 3-32X3-4 PIVOT	EA	1
37	18	PAOZZ	5310-00-068-5285	MS27183-20	96906	.WASHER,FLAT 5-16 PIVOT	EA	1
37	19	XDOZZ		19T5638	27315	.PIVOT CABLE ENGINE STOP	EA	1
37	20	XBOZZ	5305-00-993-1848	MS35207-265	96906	.SCREW,MACHINE 10-32X3-4 CLAMP	EA	2
37	21	XBOZZ	5310-00-045-3296	MS35338-43	96906	.WASHER,LOCK NO 10 CLAMP	EA	2
37	22	XBOZZ	5310-00-934-9751	MS35650-302	96906	.NUT,PLAIN,HEXAG 10-32 CLAMP	EA	2
37	23	XBOZZ		A45202	41625	.CLAMP CABLE ENGINE STOP	EA	1
37	24	XBOZZ		16T5096	27315	.BRACKET CABLE ENGINE STOP	EA	1
37	25	XBOZZ	2030-00-933-1630	A31505	41625	.CLAMP RADIATOR SHUTTER	EA	1
37	26	XDOZZ		D43142-2	41625	.CABLE SHUTTER RADIATOR 160 LG	EA	1
37	27	XBOZZ		MS35206-264	96906	.SCREW,MACHINE: 10-24 X 3/8,PLATE	EA	7
37	28	XBOZZ		32U974	27315	.PANEL ENG CONT CRANE	EA	1

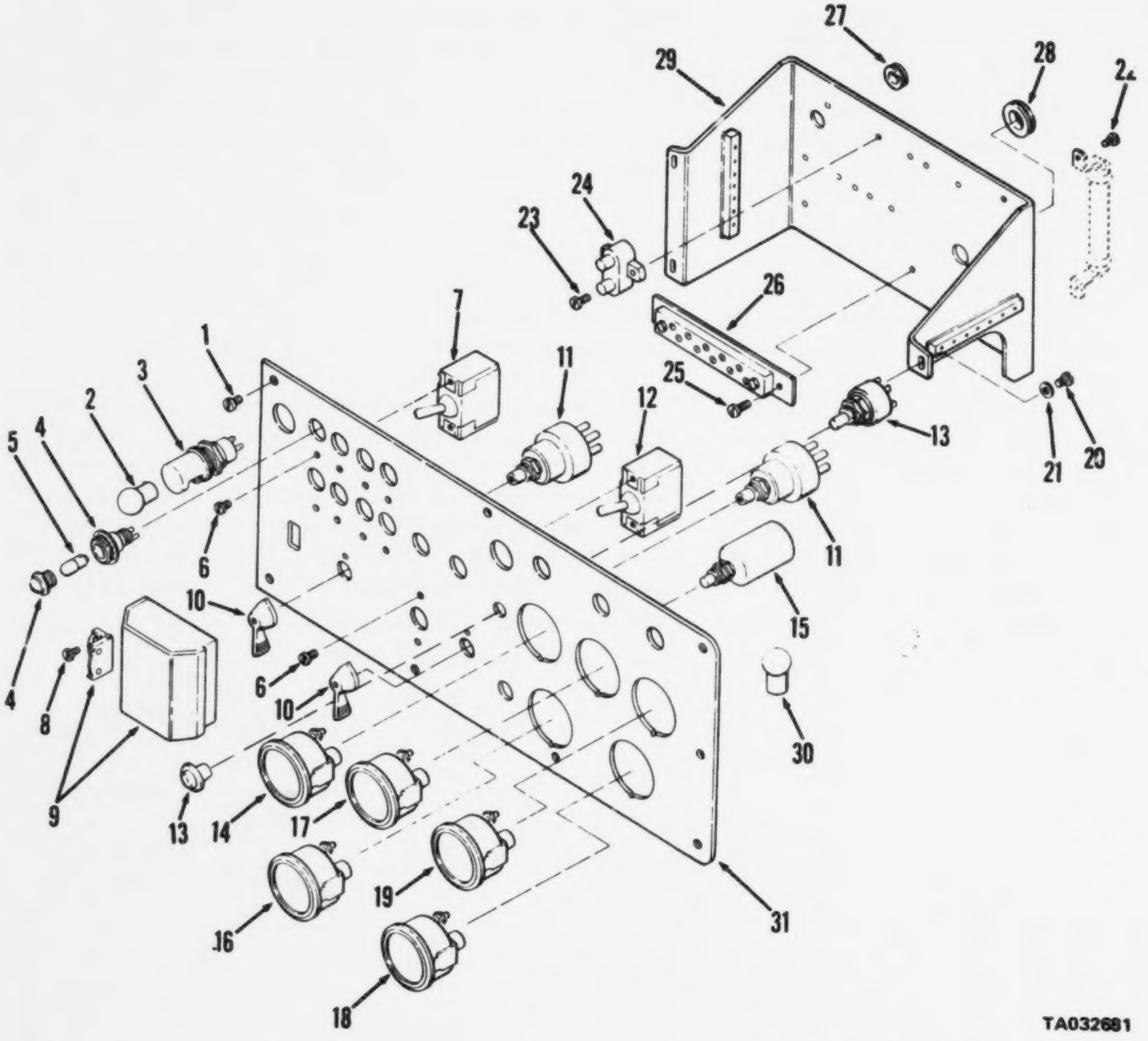

Figure 38. Instrument panel, gages and switches

(1) ILLUSTRATION (a) FIG NO.	(b) ITEM NO.	(2) SMR CODE	(3) NATIONAL STOCK NUMBER	(4) PART NUMBER	(5) FSCM	(6) DESCRIPTION USABLE ON CODE	(7) U/M	(8) QTY INC IN UNIT
						FUNCTIONAL GROUP 23 INSTRUMENT PANEL,CRANE		
38		AOOOO		100J4332	27315	.PANEL ASSY INST CRANE..	EA	1
38	1	XBOZZ		MS35206-264	96906	..SCREW,MACHINE: PANEL 10-24 X 3/8..........................	EA	8
38	2	XBOZZ		636	24455	..LAMP INCAND PANEL LIGHT....................................	EA	2
38	3	XBOZZ		900-22	72765	..LIGHT,INSTRUMENT INST PANEL................................	EA	2
38	4	XBOZZ		5201-228-101	72765	..LIGHT,INDICATOR INST PANEL.................................	EA	7
38	5	PAOZZ	6240-00-155-8714	MS25231-313	96906	...LAMP,INCANDESCEND INDICATOR LIGHT.........................	EA	1
38	6	XBOZZ	5305-00-889-3000	MS35206-230	96906	..SCREW,MACHINE 8-32X1-2 SWITCH..............................	EA	14
38	7	PAOZZ	5930-00-296-6318	MS39061-1	96906	..SWITCH,TOGGLE PANEL & CAB LIGHTS...........................	EA	6
38	8	XBOZZ		2C74C06	27315	..SCREW,THREAD FORM NO 6X1-4 SWITCH COVER....................	EA	2
38	9	XBOZZ		14P2539	27315	..COVER,SWITCH LIGHT SWITCH..................................	EA	1
38	10	XAOZZ		13212E4305	97403	..LEVER,SWITCH LIGHTS & MAIN SWITCH..........................	EA	2
38	11	PAOZZ	5930-00-699-9438	MS39060-2	96906	..SWITCH,ROTARY LIGHTS & MAIN................................	EA	2
38	12	PAOZZ	5930-00-226-6425	MS39061-4	96906	..SWITCH,TOGGLE HEATER.......................................	EA	1
38	13	XBOZZ		SW7224	01863	..SWITCH,PUSH WINDSHIELD WIPER...............................	EA	1
38	14	PAOZZ	6695-00-936-2138	MS24542-2	96906	..INDICATOR ENGINE OIL.......................................	EA	1
38	15	PAOZZ	5930-00-791-5311	4912	81263	..SWITCH,PUSH STARTER..	EA	1
38	16	PAOZZ	6625-00-321-6365	MS24532-2	96906	..METER,ARBITRARY SCA BAT IND................................	EA	1
38	17	PAOZZ	6620-00-938-8212	MS24541-2	96906	..INDICATOR,PRESSURE ENGINE OIL PRESSURE.....................	EA	1
38	18	PAOZZ	6680-00-933-3600	MS24544-2	96906	..INDICATOR,LIQUID QU LEVEL..................................	EA	1
38	19	PAOZZ	6685-00-936-2139	MS24543-2	96906	INDICATOR,TEMP ENGINE COOLANT................................	EA	1
38	20	XBOZZ		MS35206-264	96906	..SCREW,MACHINE: 10-24 X 3/8,BRACKET.........................	EA	3
38	21	XBOZZ	5310-00-014-5850	MS27183-42	96906	..WASHER,FLAT NO 10 BRACKET..................................	EA	3
38	22	XBOZZ	5305-00-984-4983	MS35206-226	96906	..SCREW,MACHINE 6-32X1-4 RESISTOR MTG........................	EA	2
38	23	XBOZZ	5305-00-984-6221	MS35206-31	96906	..SCREW,MACHINE CIRCUIT BRKR.................................	EA	10
38	24	XBOZZ		MS3516-1-1	96906	..CIRCUIT BREAKER CRANE......................................	EA	5
38	25	XBOZZ		MS35206-263	96906	..SCREW,MACHINE: 10-24 X 1/2,TERMINAL BOARD..................	EA	4
38	26	XBOZZ		4449	13445	..TERMINAL BOARD CRANE.......................................	EA	2
38	27	PCOZZ	5325-01-030-7565	G1235	79497	..GROMMET,RUBBER BRACKET.....................................	EA	1
38	28	PCOZZ	5325-01-030-7564	G1131	79497	..GROMMET,RUBBER BRACKET.....................................	EA	1
38	29	XBOZZ		16J900	27315	..BRACKET,CIR BRK MOUNTING...................................	EA	1
38	30	PAOZZ	6240-00-019-0877	1251	24455	..LAMP,INCANDESCENT INDICATORS...............................	EA	2
38	31	XBOZZ		16J501	27315	..PANEL,INSTRUMENT CRANE.....................................	EA	1

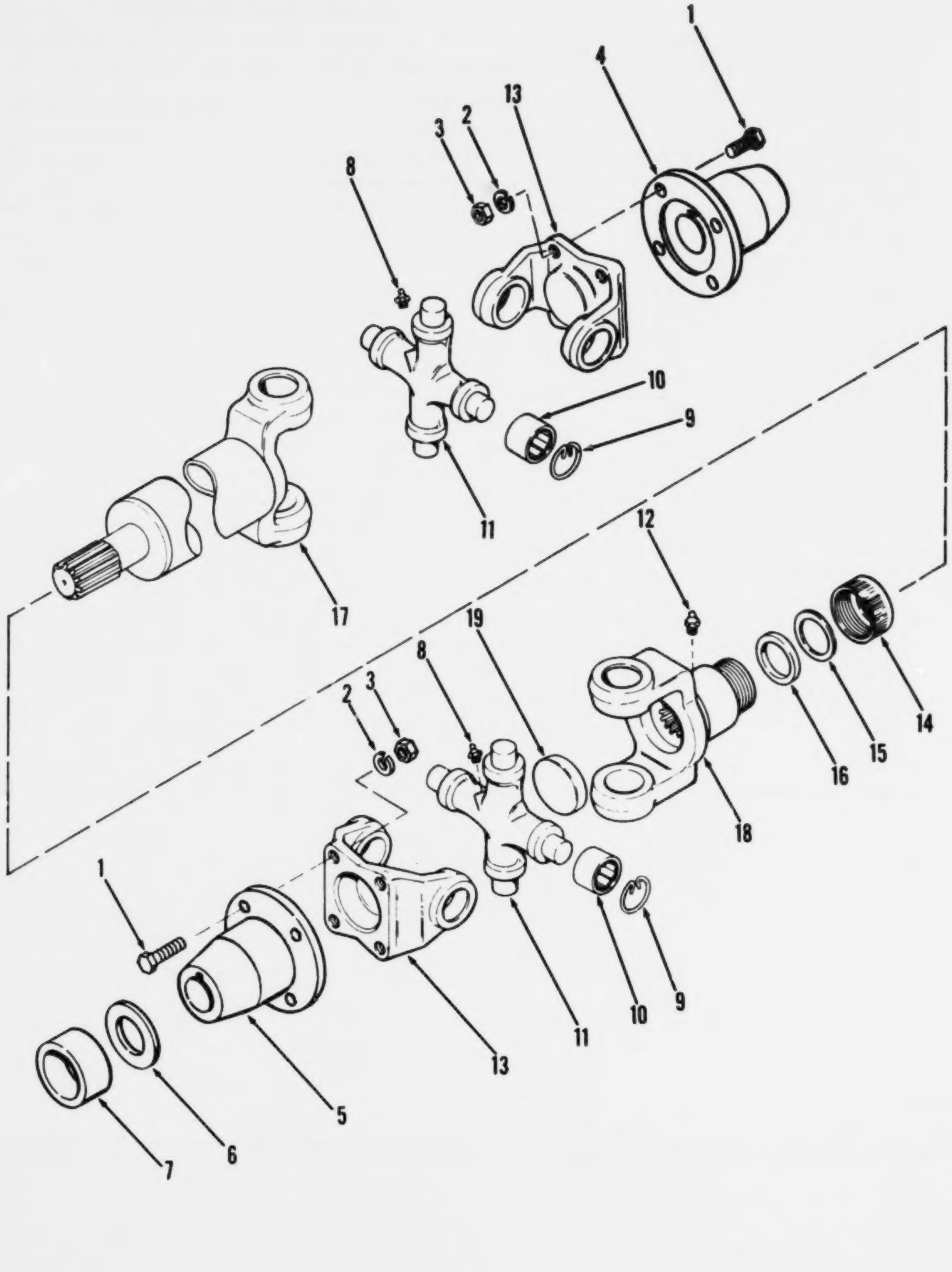

Figure 39. Shaft, propeller, crane

(1) ILLUSTRATION (a) FIG NO.	(b) ITEM NO.	(2) SMR CODE	(3) NATIONAL STOCK NUMBER	(4) PART NUMBER	(5) FSCM	(6) DESCRIPTION USABLE ON CODE	(7) U/M	(8) QTY INC IN UNIT
						FUNCTIONAL GROUP 24 PROPELLER SHAFT AND CLUTCH,CRANE		
39	1	XBOZZ	5306-00-207-5736	7-73-215	95019	.BOLT,MACHINE GEAR REDUCER....................................	EA	8
39	2	XBOZZ	5310-00-451-0599	500357-12	95019	.WASHER,LOCK FLANGE BOLT....................................	EA	8
39	3	XBOZZ	5310-00-545-3651	5C0371-4	72447	.NUT,FLANGE BOLT....................................	EA	8
39		XBOFF		81345F	95019	.SHAFT PROPELLER CRANE 9-7/8 NOM. LG....................................	EA	1
39	8	PAOZZ	4730-00-050-4203	MS15001-1	96906	..FITTING,LUBRICATION BEARING....................................	EA	1
39	12	PAOZZ	4730-01-032-1351	50168-2	95019	..FITTING,LUBE SLEEVE YOKE....................................	EA	1

AMC FORM 1779, 1 OCT 73 (REPLACES AMC TEST FORMS 1753 AND 1754, 6 APR 70, WHICH WILL BE USED UNTIL 1 JUL 74)

REPAIR PARTS LIST

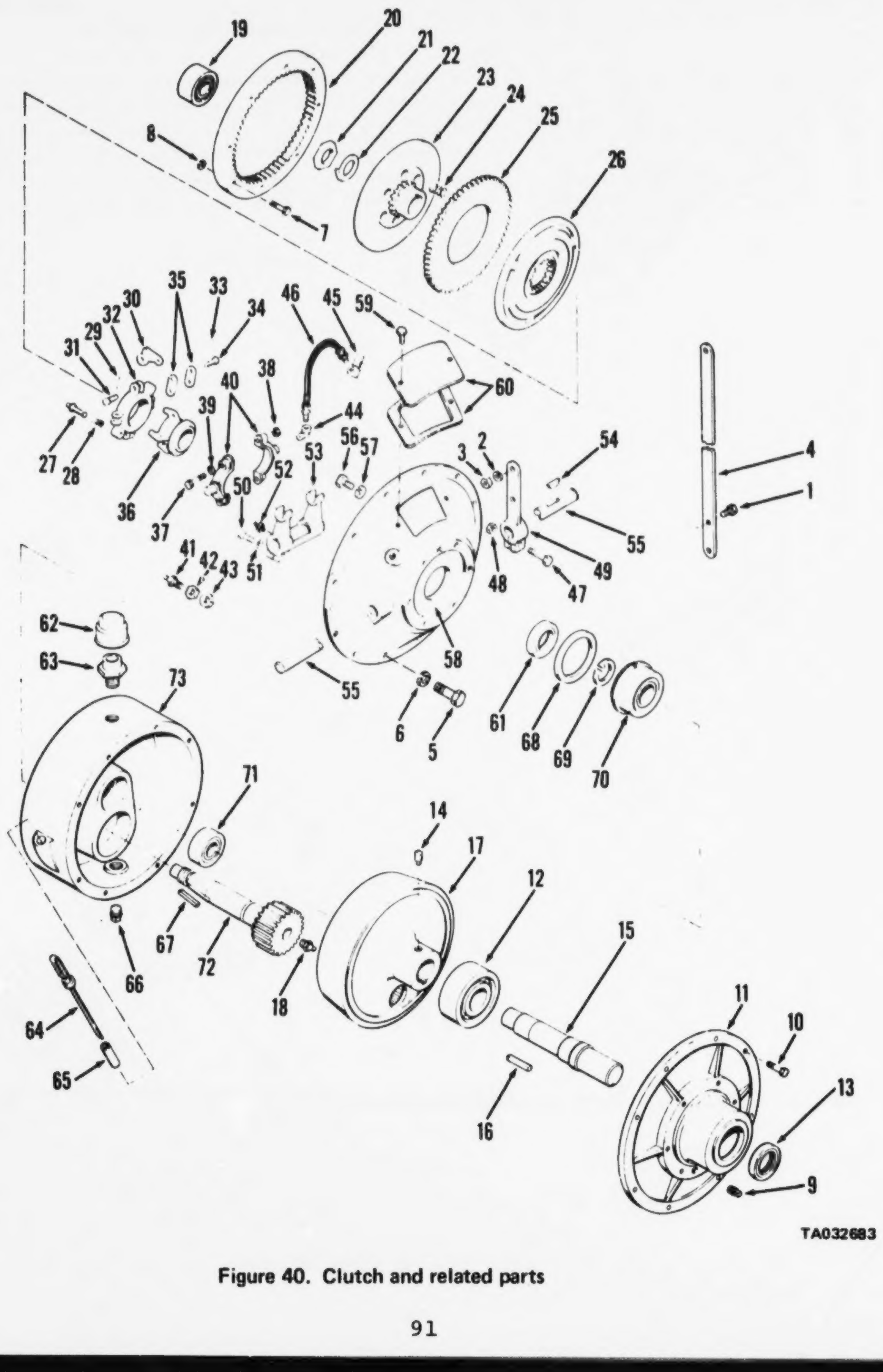

Figure 40. Clutch and related parts

(1) ILLUSTRATION (a) FIG NO.	(1) ILLUSTRATION (b) ITEM NO.	(2) SMR CODE	(3) FEDERAL STOCK NUMBER	(4) PART NUMBER	(5) FSCM	(6) DESCRIPTION USABLE ON CODE	(7) U/M	(8) QTY INC IN UNIT
						FUNCTIONAL GROUP 24 PROPELLER SHAFT AND CLUTCH,CRANE		
40	1	PAOZZ	5305-00-782-9494	MS90725-114	96906	.SCREW,CAP,HEXAGON 1-2-13X1-3-4 CLUTCH........................	EA	2
40	2	PAOZZ	5310-00-584-5272	MS35338-48	96906	.WASHER,LOCK 1-2 CLUTCH LEVER................................	EA	2
40	3	PAOZZ	5310-00-768-0318	MS51967-14	96906	.NUT,PLAIN HEXAGON 1-2-13 CLUTCH LEVER........................	EA	2
40	4	XBOZZ		6P2446	27315	.LEVER,EXT CLTCH CRANE..	EA	1
40	9	XBOZZ		M2051X	61208	.PLUG,PIPE 1-2 NPT ACCESS HOLE................................	EA	1
40	18	PAOZZ	4730-00-118-5174	M2051K	61208	.PLUG,PIPE 1-4 NPT CLUTCH SHAFT...............................	EA	1
40	49	XDOZZ		A3361	61208	..LEVER,CLUTCH OPERATING SHAFT................................	EA	1
40	41	PAOZZ	4730-00-172-0034	MS15003-6	96906	.FITTING,LUBRICATION 1-8NPT 90 COLLAR HOSE....................	EA	1
40	42	PAOZZ	5310-01-032-0569	M2027AN	61208	.NUT,JAM,HEXAGON 5-8 LUBE FITTING.............................	EA	1
40		MOOZZ		A1663	61208	.HOSE ASSY LUBRICATION COLLAR.................................	EA	1
40	44	PAOZZ	4730-00-158-0869	M1284	61208	..ELBOW,PIPE TO TUBE COLLAR...................................	EA	1
40	45	PAOZZ	4730-00-221-8749	M1283	61208	..FITTING,HOSE HOUSING..	EA	1
40	46	PAOZZ	4720-00-802-2038	M1252A	61208	..HOSE ASSEMBLY LUBRICATION...................................	EA	1
40	47	XBOZZ		M2002AY	61208	.SCREW,CAP,HEXAGON 3-8-16X2 LEVER.............................	EA	1
40	48	XBOZZ	5310-00-246-0197	M1930F	61208	.NUT PLAIN HEXAGON 3-8-16 LEVER...............................	EA	1
40	49	XDOZZ		A3361	61208	..LEVER,CLUTCH OPERATING SHAFT................................	EA	1
40	52	PAOZZ	4730-00-256-4305	M503	61208	.FITTING,LUBE OPERATING SHAFT.................................	EA	2
40	59	XBOZZ	5305-00-236-3598	M2023F	61208	.SCREW,MACHINE RD HD 1-4-20X1-2 INSPECTION COVER..............	EA	2
40	60	XBOZZ		1965N	61208	.COVER,INSPECT CLUTCH...	EA	1
40	62	XBOZZ		M639R	61208	.BREATHER,HSG GEAR REDUCER....................................	EA	1
40	63	XBOZZ		283CA	61208	.PIPE,BREATHER HSG..	EA	1
40	64	XDOZZ		A1461G	61208	.GAGE,OIL LEVEL GEAR HSG......................................	EA	1
40	65	XDOZZ		A1557B	61208	.TUBE,GAGE GEAR HOUSING.......................................	EA	1
40	66	XBOZZ		M2051AE	61208	.PLUG,PIPE HSG DRAIN..	EA	1

AMC FORM 1779, 1 OCT 73 (REPLACES AMC TEST FORMS 1783 AND 1784, 6 APR 70, WHICH WILL BE USED UNTIL 1 JUL 74)

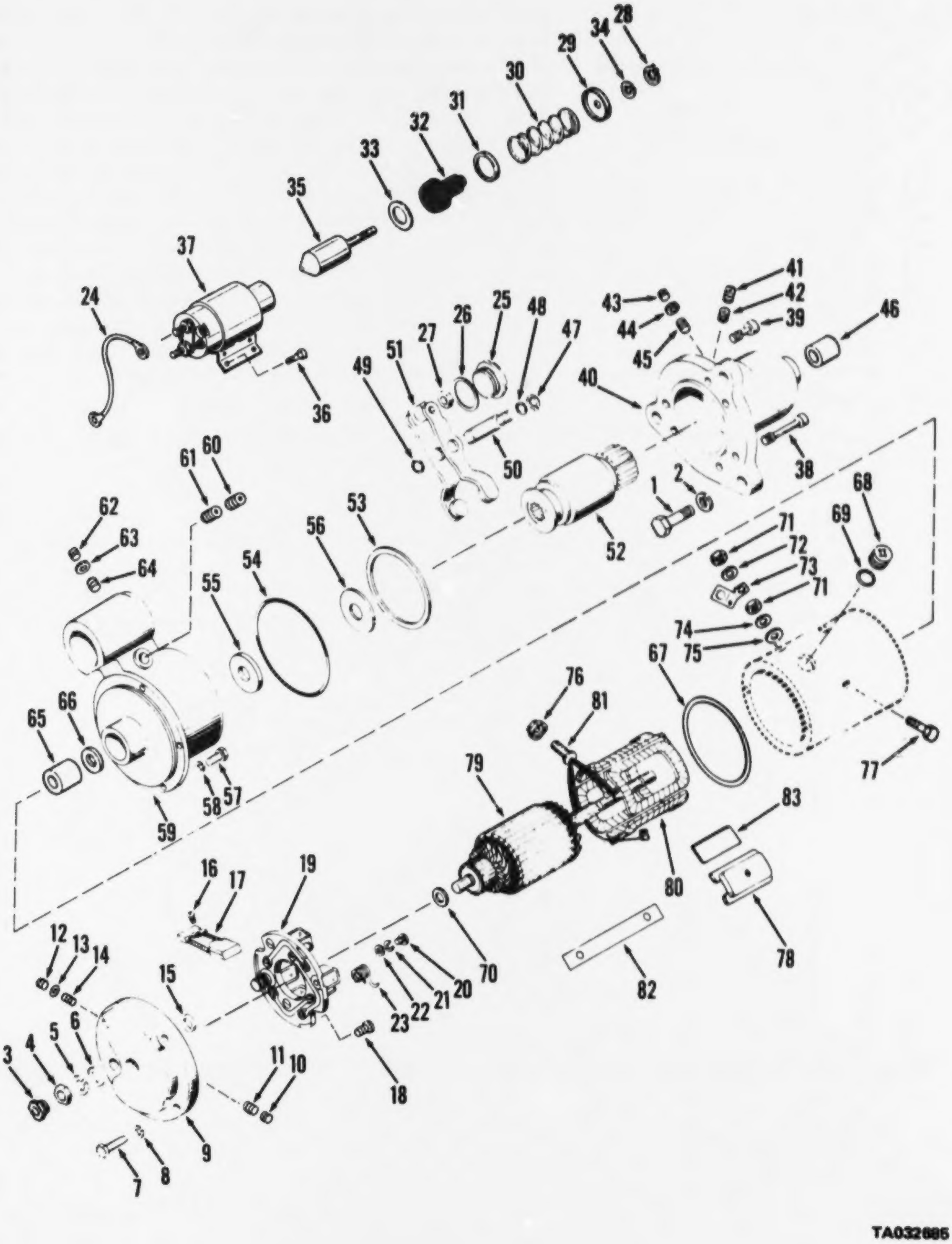

Figure 42. Starter assembly, crane

(1) ILLUSTRATION (a) FIG NO	(b) ITEM NO	(2) SMR CODE	(3) FEDERAL STOCK NUMBER	(4) PART NUMBER	(5) FSCM	(6) DESCRIPTION USABLE ON CODE	(7) U/M	(8) QTY INC IN UNIT
						FUNCTIONAL GROUP 26 ELECTRICAL SYSTEM,		
						ENGINE		
42	1	PAOZZ	5306-00-118-5046	5131967	72582	.SCREW,12 PT HD STARTER MOUNTING	EA	2
42	2	XBOZZ		MS35338-50	96906	.WASHER,LOCK, 5-8,STARTER	EA	2
42		PAOFZ	2920-01-111-1596	1114857	16764	.STARTER,ENGINE DIESEL ENGINE	EA	1
42	3	PAOZZ	5310-00-995-2291	9414418	16764	..NUT TERMINAL STUD COMM END	EA	1
42	4	PAOZZ	5310-00-768-0318	MS51967-4	96906	..NUT,PLAIN HEXAGON COMM END	EA	1
42	5	PAOZZ	5310-00-995-2296	9421427	24617	..WASHER,LOCK TERMINAL STUD	EA	2
42	6	PAOZZ	5310-00-167-0839	1914647	18876	..WASHER,FLAT COMM END	EA	1
42	10	XBOZZ	4730-00-044-4689	9427882	16764	..PLUG,PIPE OIL HOLE	EA	1
42	25	XBOZZ	5365-00-753-9528	1945356	16764	.PLUG,MACHINE THREAD LEVER HOUSING	EA	1
42	26	PAOZZ	5330-00-914-0703	1964857	16764	.GASKET LEVER HOUSING	EA	1
42	27	XBOZZ	5310-00-965-6000	9412305	16764	.NUT,SELF-LOCKING HE LEVER	EA	1
42	36	XBOZZ	5306-00-775-5209	1930611	16764	.BOLT,MACHINE SOLENOID MOUNTING	EA	4
42	44	PAOZZ	5330-00-859-3369	1933111	16764	..GASKET OIL RSVR	EA	1

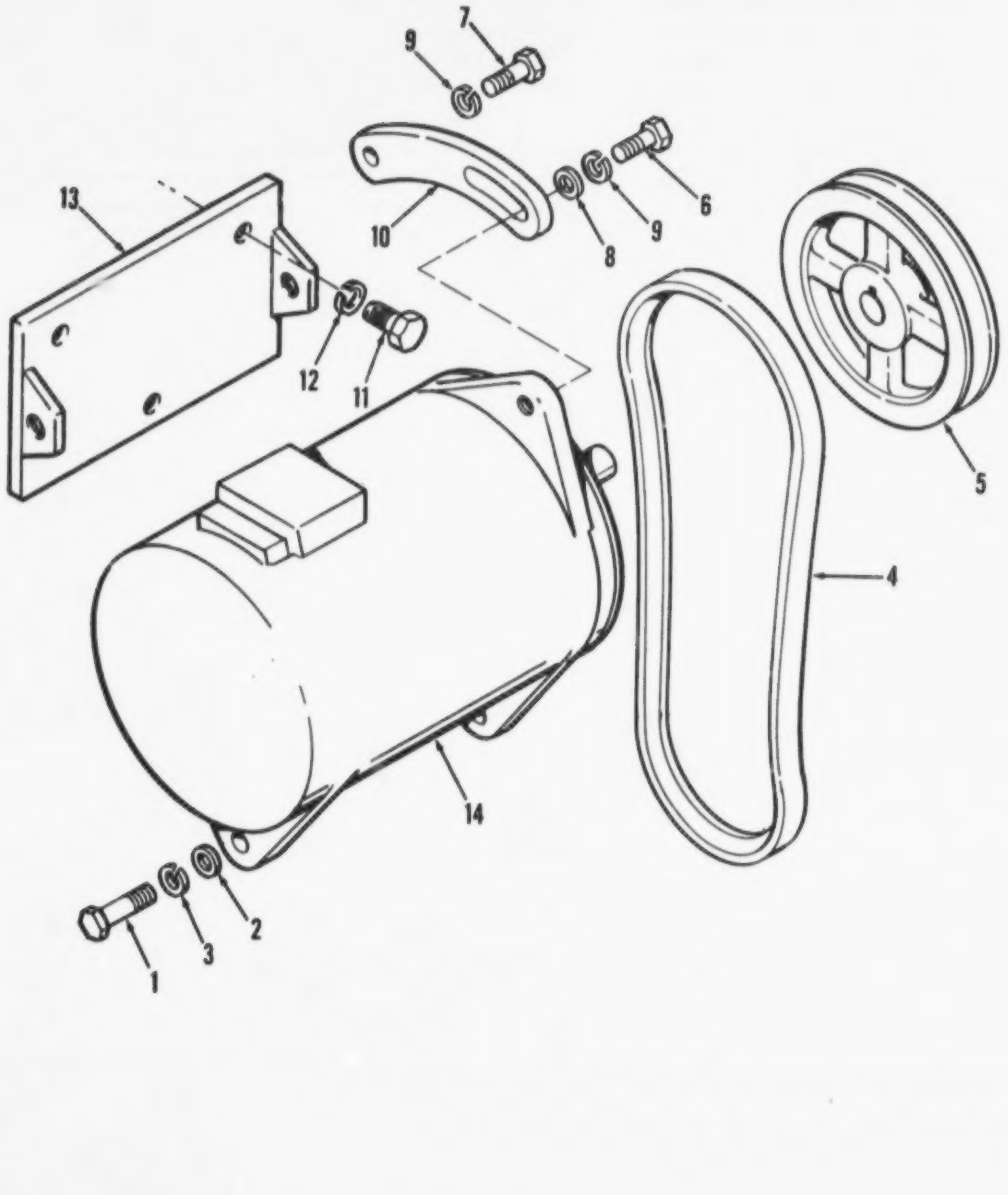

Figure 43. Generator mounting

(1) ILLUSTRATION		(2)	(3)	(4)	(5)	(6)	(7)	(8)
(a) FIG NO.	(b) ITEM NO.	SMR CODE	NATIONAL STOCK NUMBER	PART NUMBER	FSCM	DESCRIPTION USABLE ON CODE	U/M	QTY INC IN UNIT
						FUNCTIONAL GROUP 26 ELECTRICAL SYSTEM, ENGINE		
43	1	XBOZZ	5305-00-018-0150	180150	72582	.SCREW,CAP,HEXAGON 7-16-14X1-3-8 GENERATOR MTG................	EA	2
43	2	XBOZZ	5310-00-780-0116	5131913	72582	.WASHER,FLAT GENERATOR MTG......................................	EA	2
43	3	XBOZZ	5310-00-209-0965	MS35338-47	96906	.WASHER,LOCK 7-16 GENERATOR MTG................................	EA	2
43	4	PAOZZ	3030-00-298-6831	5148276	72582	.BELT,V,MATCHED SET 2 BELT MATCHED SET.........................	EA	2
43	5	XBOZZ	3020-00-932-4846	5136652	72582	.PULLEY,GENERATOR GENERATOR.....................................	EA	1
43	6	XBOZZ	5305-00-269-3210	MS90725-59	96906	.SCREW,CAP,HEXAGON 3-8-16X7-8 GEN STRAP........................	EA	1
43	7	XBOZZ	5305-00-068-0511	MS90728-62	96906	.SCREW,CAP,HEXAGON 3-8-16X1-1-4 GEN STRAP......................	EA	1
43	8	XBOZZ	5310-00-431-8874	5132147	72582	.WASHER,FLAT GEN STRAP..	EA	1
43	9	XBOZZ	5310-00-061-1258	178551	72582	.WASHER,LOCK 3-8 INT-EXT GEN STRAP.............................	EA	4
43	10	XDOZZ		5147006	72582	.STRAP,GEN ADJ GEN BELT ADJUSTING...............................	EA	1
43	11	XBOZZ	5305-00-418-2843	454906	72582	.SCREW,CAP,HEXAGON 3-8-16X1-1-2	EA	3
43	12	XBOZZ	5310-00-061-1258	178551	72582	.WASHER,LOCK 3-8 GEN BRACKET....................................	EA	3
43	13	XDOZZ		5147007	72582	.BRACKET,GENERAT MOUNTING..	EA	1
43	14	PAOFH	2920-00-909-2483	10929868	19207	.GENERATOR,ENGINE AC 28V 60AMP..................................	EA	1

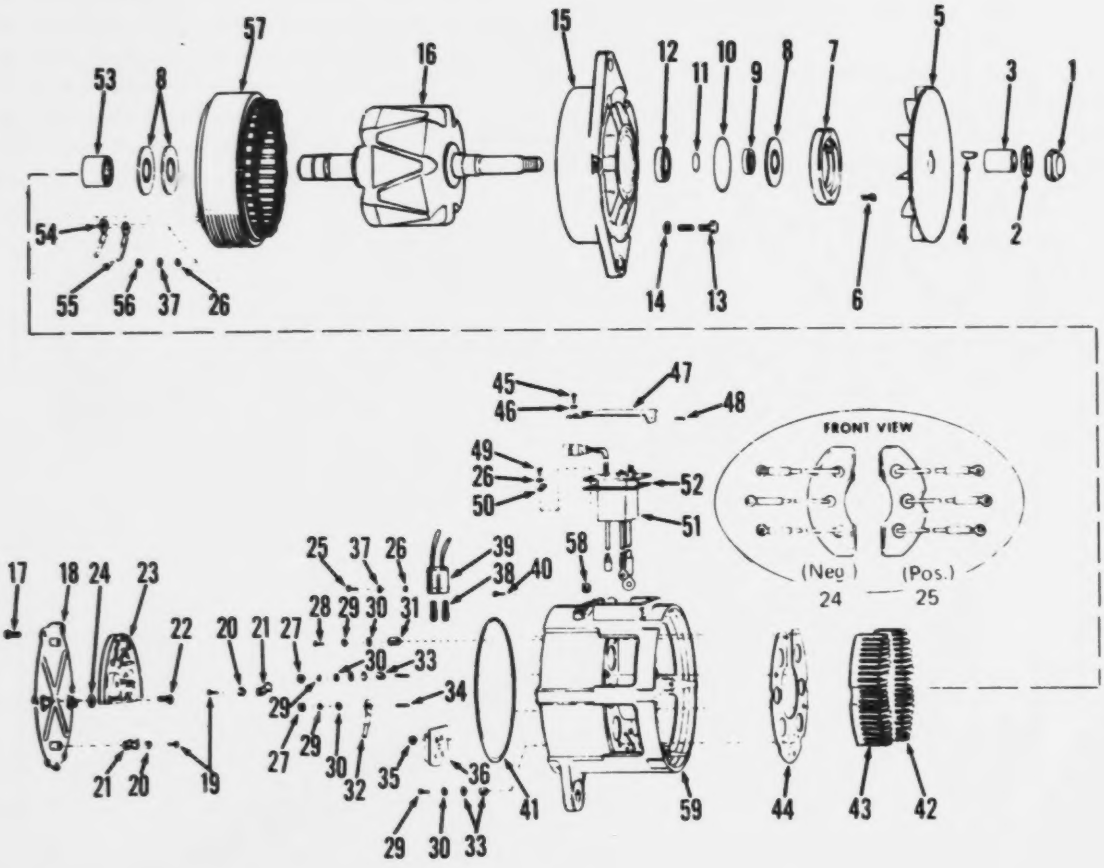

TA032687

Figure 44. Generator assembly

(1) ILLUSTRATION (a) FIG NO.	(b) ITEM NO.	(2) SMR CODE	(3) NATIONAL STOCK NUMBER	(4) PART NUMBER	(5) FSCM	(6) DESCRIPTION USABLE ON CODE	(7) U/M	(8) QTY INC IN UNIT
						FUNCTIONAL GROUP 26 ELECTRICAL SYSTEM, ENGINE		
44	1	XBOZZ	5310-00-253-1205	11613407-2	19207	.NUT,SELF LOCKING 5-8-18 PULLEY.............................	EA	1
44	2	XBOZZ	5310-00-614-3505	MS15795-820	96906	.WASHER,FLAT 5-8 PULLEY....................................	EA	1
44	3	XDOZZ		78283	35510	.SPACER,PULLEY ALTERNATOR..................................	EA	1
44	4	PAOZZ	5315-00-616-5526	MS35756-8	96906	.KEY,WOODRUFF NO 5 FAN.....................................	EA	1
44	5	XDOZZ	2920-00-076-9432	78267	35510	.FAN GENERATOR COOLING.....................................	EA	1
44	17	XBOZZ	5305-01-030-8710	737C4	35510	.SCREW,MACHINE 10-32X1-2 COVER.............................	EA	6

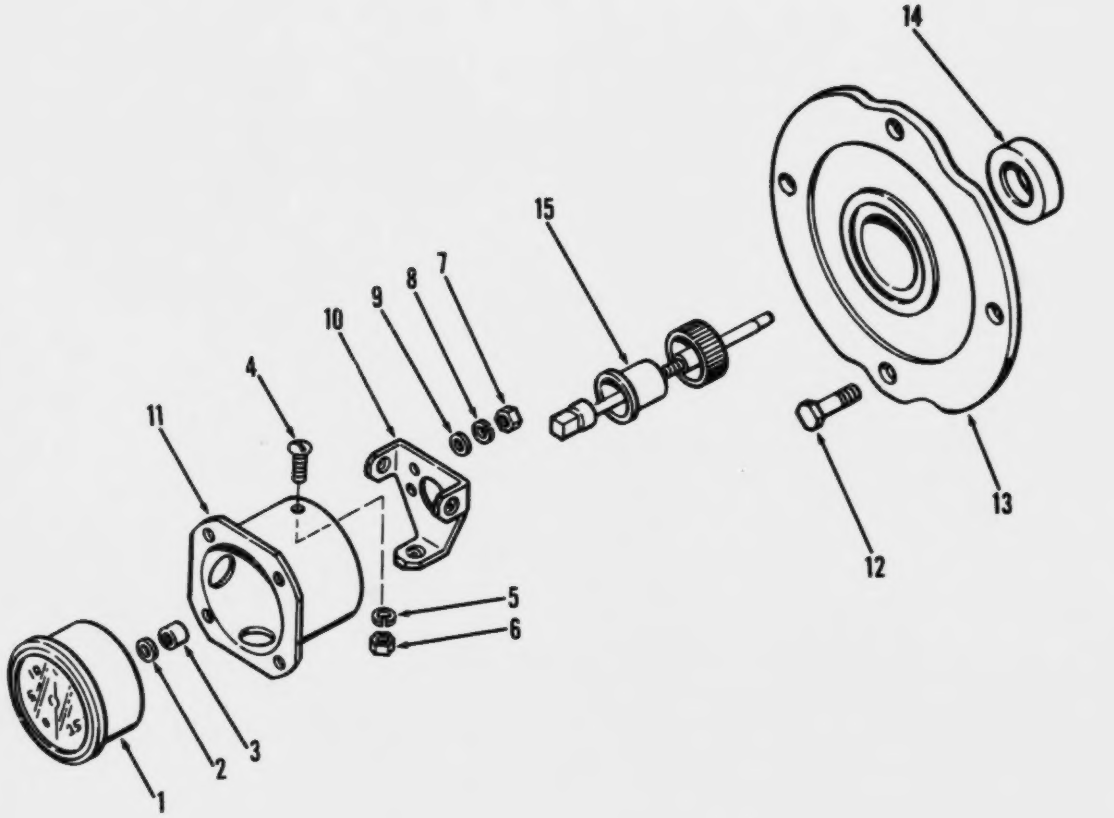

Figure 45. Tachometer assembly

(1) ILLUSTRATION		(2)	(3)	(4)	(5)	(6)	(7)	(8)
(a) FIG NO.	(b) ITEM NO.	SMR CODE	NATIONAL STOCK NUMBER	PART NUMBER	FSCM	DESCRIPTION USABLE ON CODE	U/M	QTY INC IN UNIT
						FUNCTIONAL GROUP 27 TACHOMETER		
45		XDOFF	6680-01-036-9039	5147633	72582	.TACHOMETER ASSY INCL RETAINER	EA	1
45	1	PAOZZ	6680-01-028-6373	5657283	72582	..TACHOMETER RPM INCL HRMETER	EA	1
45	2	XBOZZ		MS27183-14	96906	..WASHER,FLAT 3-8 TACHOMETER	EA	1
45	3	XBOZZ	5310-01-033-9414	1568211	72582	..FERRULE,NUT TACHOMETER	EA	1
45	4	XBOZZ	5305-00-984-6196	MS35206-248	96906	..SCREW,MACHINE 8-32X7-8 RETAINER	EA	2
45	5	XBOZZ	5310-00-045-3299	MS35338-42	96906	..WASHER,LOCK NO 8 RETAINER	EA	2
45	6	XBOZZ	5310-00-010-3092	103092	72582	..NUT,PLAIN HEXAGON 8-32 RETAINER	EA	2
45	7	XBOZZ	5310-00-934-9751	MS35650-302	96906	..NUT PLAIN HEXAGON 10-32 TACHOMETER	EA	2
45	8	XBOZZ	5310-00-922-2017	120217	72582	..WASHER,LOCK NO 10 TACHOMETER	EA	2
45	9	XBOZZ	5310-00-685-8308	FFW92	81349	..WASHER,FLAT NO 10 TACHOMETER	EA	2
45	10	XDOZZ		5148776	72582	..RETAINER,TACH ENGINE	EA	1
45	11	XBOZZ	6680-00-445-1066	5123740	71934	..ADAPTER,TACH ENGINE	EA	1
45	12	XBOZZ	5305-00-071-1767	MS90725-110	96906	.SCREW,CAP,HEXAGON 1-2-13X1-1-8 TACH	EA	1
45	13	XDOZZ		5124240	72582	.COVER TACH ADAPTER ENGINE	EA	1
45	14	PAOZZ	5330-00-292-0492	3202615	72582	..SEAL,PLAIN,ENCASED TACH	EA	1
45	15	XDOZZ		6478819	72582	.SHAFT TACHOMETER 3-1-4 LG	EA	1

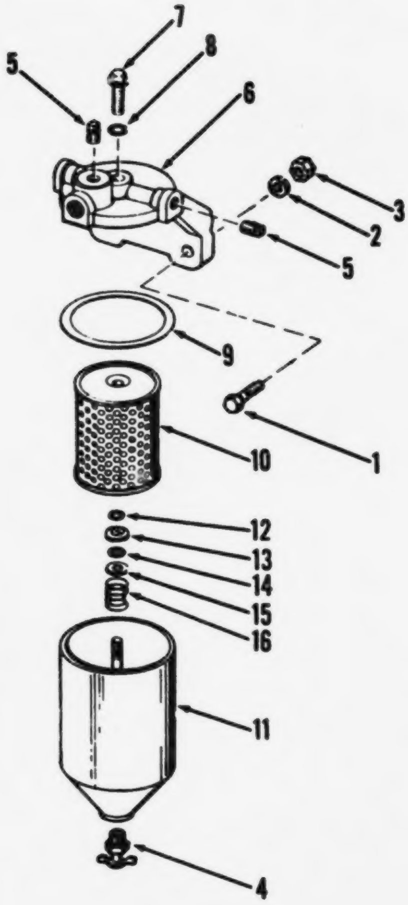

Figure 46. Filter assembly, fuel

(1) ILLUSTRATION (a) FIG NO.	(b) ITEM NO.	(2) SMR CODE	(3) NATIONAL STOCK NUMBER	(4) PART NUMBER	(5) FSCM	(6) DESCRIPTION USABLE ON CODE	(7) U/M	(8) QTY INC IN UNIT
						FUNCTIONAL GROUP 28 FUEL FILTER,STRAINER AND PUMP		
46	1	XBOZZ	5305-00-269-2807	MS90726-64	96906	.SCREW,CAP,HEXAGON 3-8-24X1-1-2 FUEL	EA	2
46	2	XBOZZ		103321	72852	.WASHER LOCK 3-8 FUEL FILTER	EA	2
46	3	XBOZZ		117045	72852	.NUT PLAIN HEXAGON 3-8-24 FUEL FILTER	EA	2
46		XDOZZ		5573949	72852	.FILTER ASSEMBLY DIESEL FUEL	EA	1
46	4	XBOZZ	4820-00-477-9779	103647	72582	..COCK,DRAIN FUEL FILTER	EA	1
46	5	XBOZZ	5365-00-708-7865	5145011	72582	..PLUG,MACHINE 3-8 NPT SQ HD	EA	2
46	6	XBOZZ	2910-00-932-9634	6436254	72582	..COVER ASSEMBLY FUEL FILTER	EA	1
46	7	XBOZZ	5306-00-604-7961	5574118	72582	...BOLT,SHOULDER FILTER COVER	EA	1
46	8	XBOZZ	5310-00-551-0433	1503576	72582	...WASHER,FLAT COVER	EA	1
46	9	PAOZZ	5330-00-846-9841	5574161	72582	..GASKET FILTER	EA	1
46	10	PAOZZ	2910-00-377-5548	5573263	72582	..FILTER ELEMENT INCL GASKETS	EA	1
46	11	XBOZZ	2910-00-651-7667	5574125	72582	...SHELL ASSEMBLY FUEL FILTER	EA	1
46	12	XDOZZ	5365-00-543-3615	5574120	72582	...RING RETAINING SPRING SEAT	EA	1
46	13	XDOZZ		5574123	72585	...SEAT SPRING ELEMENT SPRING	EA	1
46	14	XDOZZ	5330-00-612-3123	5574126	72585	...SEAL SEAT ELEMENT SPRING	EA	1
46	15	XDOZZ		5574122	72582	...SEAT WASHER ELEMENT SPRING	EA	1
46	16	XDOZZ	5360-00-619-8198	5574124	72582	...SPRING,HELICAL,COMP ELEMENT	EA	1

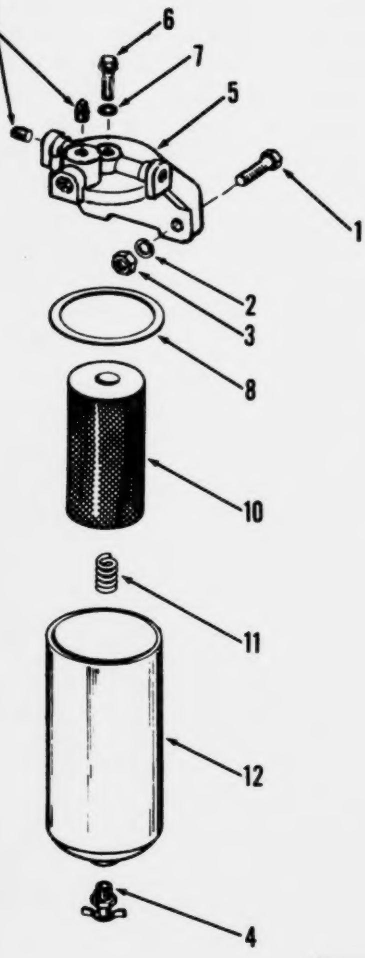

Figure 47. Strainer assembly, fuel

(1) ILLUSTRATION (a) FIG NO.	(b) ITEM NO.	(2) SMR CODE	(3) FEDERAL STOCK NUMBER	(4) PART NUMBER	(5) FSCM	(6) DESCRIPTION USABLE ON CODE	(7) U/M	(8) QTY INC IN UNIT
						FUNCTIONAL GROUP 28 FUEL FILTER,STRAINER AND PUMP		
47	1	XDOZZ	5305-00-942-2196	MS18154-60	96906	.SCREW CAP HEXAGON 3-8-16X1 FUEL STRAINER	EA	2
47	2	XDOZZ	5310-00-637-9541	MS35338-46	96906	.WASHER,LOCK 3-8 STRAINER	EA	2
47	3	XDOZZ	5310-00-732-0558	MS51967-8	96906	.NUT PLAIN HEXAGON 3-8-16 STRAINER	EA	2
47		PBOZZ	2910-00-287-5474	760	70040	.FILTER,FLUID DIESEL FUEL	EA	1
47	4	XBOZZ	4820-00-477-9779	103647	72582	..COCK,DRAIN STRAINER	EA	1
47	5	XAOZZ		6436253	72582	..COVER ASSY STRAINER	EA	1
47	6	XBOZZ	2910-00-080-7254	6435753	72582	...BOLT,COVER STRAINER	EA	1
47	7	PAOZZ	5330-00-930-3244	6435754	70040	...GASKET STRAINER COVER	EA	1
47	8	PAOZZ	5330-00-846-9841	5574161	72582	...GASKET STRAINER	EA	1
47	9	XBOZZ		5145011	72582	..PLUG,PIPE: STRAINER	EA	2
47	10	PAOZZ	2910-00-752-8985	5574961	72582	..FILTER ELEMENT INCL GASKETS	EA	1
47	11	XBOZZ	2910-00-932-4842	6435048	72582	..SPRING,FUEL STRAINE ELEMENT	EA	1
47	12	XAOZZ		5577586	72582	..SHELL,STRAINER FILTER FUEL	EA	1

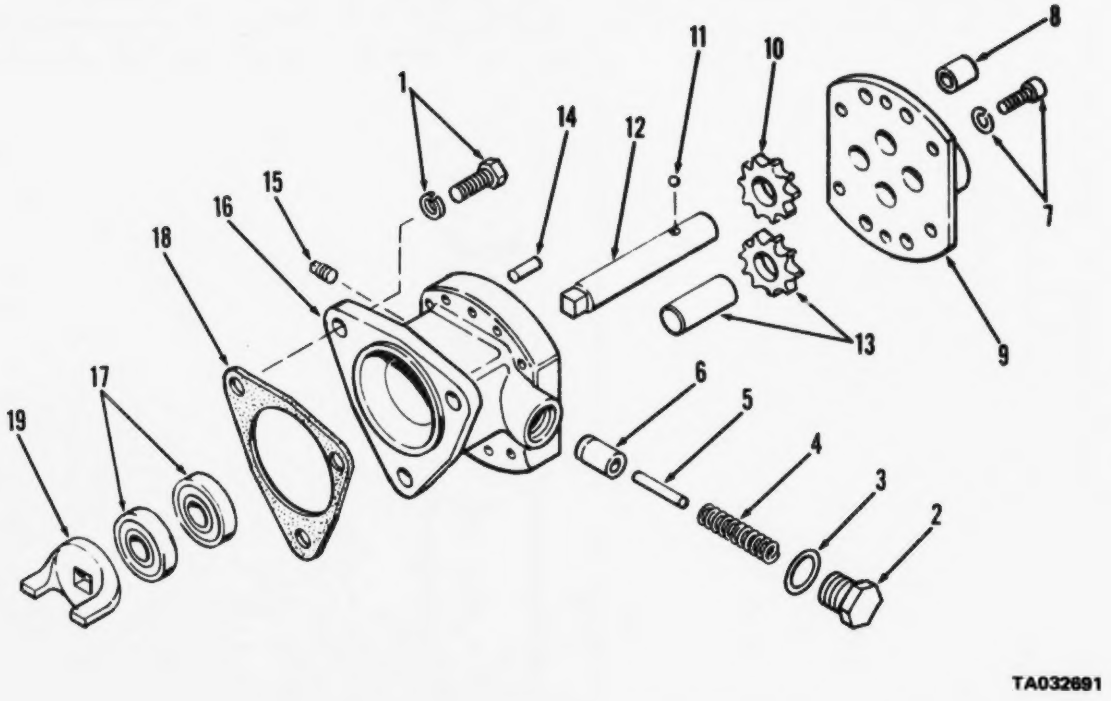

Figure 48. Pump assembly, fuel

(1) ILLUSTRATION (a) FIG NO.	(b) ITEM NO.	(2) SMR CODE	(3) NATIONAL STOCK NUMBER	(4) PART NUMBER	(5) FSCM	(6) DESCRIPTION USABLE ON CODE	(7) U/M	(8) QTY INC IN UNIT
						FUNCTIONAL GROUP 28 FUEL FILTER,STRAINER AND PUMP		
48	1	XBOZZ	5306-00-613-5356	5118219	72582	.BOLT,ASSEMBLED 5-16-18X7-8 WITH LKWSHR...EL PUMP............	EA	3
48		PAOFF	2910-00-175-9250	5195560	72582	.PUMP,FUEL TRANSFER DIESEL ENGINE..........................	EA	1
48	18	KFOZZ		515C193	72582	GASKET,FUEL PUMP TO ENGINE : PART OF KIT P/N 5195078 AND .GASKET,FUEL PUMP TO ENGINE : PART OF KIT....................	EA	1

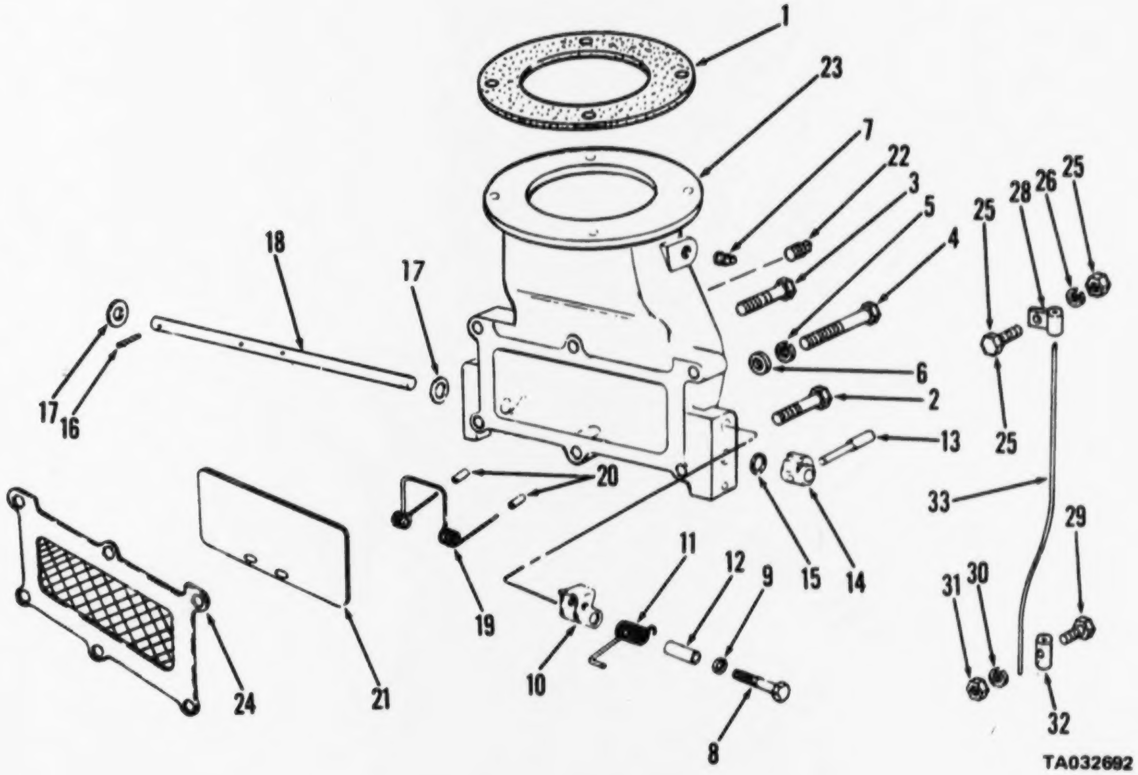

Figure 49. Housing assembly

(1) ILLUSTRATION (a) FIG NO.	(b) ITEM NO.	(2) SMR CODE	(3) NATIONAL STOCK NUMBER	(4) PART NUMBER	(5) FSCM	(6) DESCRIPTION USABLE ON CODE	(7) U/M	(8) QTY INC IN UNIT
						FUNCTIONAL GROUP 29 BLOWER INSTALLATION		
49	1	XFOZZ		5196054	72582	.GASKET,FLANGE AIR INLET..		
49	2	XBOZZ	5305-00-354-1227	5157244	72582	.SCREW,CAP,HEXAGON 3-8-16X1-3-4 AIR INLET..........................	EA	1
49	3	XDOZZ	5305-00-269-3216	MS90725-66	96906	.SCREW,CAP,HEXAGON 3-8-16X2 AIR INLET..............................	EA	4
49	4	XDOZZ	5305-00-269-3224	MS90725-74	96906	.SCREW,CAP,HEXAGON 3-8-16X3 AIR INLET..............................	EA	1
49	5	XDOZZ	5310-00-637-9541	MS35338-46	96906	.WASHER,LOCK 3-8 AIR INLET..	EA	1
49	6	XDOZZ	5310-00-950-1310	MS27183-4	96906	.WASHER,FLAT 3-8 AIR INLET..	EA	6
49		XBOZZ		51?C281	72582	.HOUSING ASSY AIR INLET...	EA	1
49	7	XBOZZ	4730-00-148-4975	5142549	72582	..PLUG,PIPE 3-4 INLET HSG...	EA	1
49	8	XBOZZ	5306-00-230-9866	179803	72582	..SCREW,CAP,HEXAGON 1-4-20X1-3-4 LATCH............................	EA	1
49	9	XDOZZ	5310-00-637-9541	MS35338-46	96906	..WASHER,LOCK 1-4 LATCH...	EA	1
49	10	XBOZZ	2815-00-712-5749	5114727	72582	..LEVER,MANUAL AIR INLET..	EA	1
49	11	PAOZZ	2815-00-877-8386	5112787	72582	..SPRING,HELICAL TENSION SHUTDOWN VALVE............................	EA	1
49	12	XBOZZ	2815-00-164-6421	5143836	72582	..ECCENT BUSHING, SHUTDOWN VALVE....................................	EA	1
49	13	XBOZZ	2815-00-788-6635	5114974	72582	..HANDLE CAM AIR INLET VALVE..	EA	1
49	14	XBOZZ		5122623	72852	..CAM VALVE AIR INLET...	EA	1
49	15	PCOZZ	5330-00-682-7193	5182977	72582	..PACKING,PREFORMED AIR INLET.......................................	EA	1
49	16	PAOZZ	1450-00-775-1359	273436	72582	..PIN,SPRING 1-8X11-16 SHAFT..	EA	1
49	17	XBOZZ		MS27183-14	96906	..WASHER,FLAT 3-8 SHAFT...	EA	1
49	18	XBOZZ	2990-00-932-7392	5116445	72582	..SHAFT,AIR HOUSING...	EA	1
49	19	PAOZZ	5360-00-745-7791	5111904	72582	..SPRING,HELICAL INTERNAL AIR INLET VALVE..........................	EA	1
49	20	PAOZZ	1450-00-775-1359	273436	72582	..PIN,SPRING 1-8X11-16 AIR INLET VALVE............................	EA	1
49	21	XBOZZ	2990-00-932-7391	5116457	72582	..VALVE,AIR AIR INLET...	EA	1
49	22	XBOZZ	4730-00-187-4207	5145010	72582	..PLUG,PIPE 1-4NPT HOUSING..	EA	1
49	23	XBOZZ		5116383	72582	..HOUSING,AIR INLET...	EA	1
49	24	XFOZZ		5196054	72582	.SCREEN,BLOWER AIR INLET..	EA	1
49	25	XDOZZ	5305-00-267-8972	MS90726-1	96906	.SCREW,CAP,HEXAGON 1-4-28X3-8 WIRE CLAMP..........................	EA	1
49	26	XDOZZ	5310-00-637-9541	MS35338-46	96906	.WASHER,LOCK 1-4 WIRE CLAMP..	EA	1
49	27	XDOZZ	5310-00-768-0319	MS51968-2	96906	.NUT,PLAIN,HEXAGON 1-4-28 WIRE CLAMP..............................	EA	1
49	28	XDOZZ		320569	72582	.CLAMP,WIRE SHUTDOWN CONTROL.......................................	EA	1
49	29	XDOZZ	5305-00-489-3883	140855	97907	.SCREW,HEX SOCKET 8-32X5-16 WIRE GUIDE............................	EA	1
49	30	XDOZZ	5310-00-637-9541	MS35338-46	96906	.WASHER,LOCK 3-8 GUIDE..	EA	1
49	31	XDOZZ	5310-00-975-2075	MS35691-21	96906	.NUT,PLAIN,HEXAGON 3-8-24 GUIDE....................................	EA	1
49	32	PAOZZ	5310-00-735-0572	7350572	19207	.GUIDE WIRE SHUTDOWN CONTROL.......................................	EA	1
49	33	PAOZZ	2590-00-C05-5027	5146238	72582	.CONTROL ASSEMBLY SHUTDOWN...	EA	1

AMC FORM 1779, 1 OCT 73 (REPLACES AMC TEST FORMS 1753 AND 1754, 6 APR 73, WHICH WILL BE USED UNTIL 1 JUL 74)

REPAIR PARTS LIST

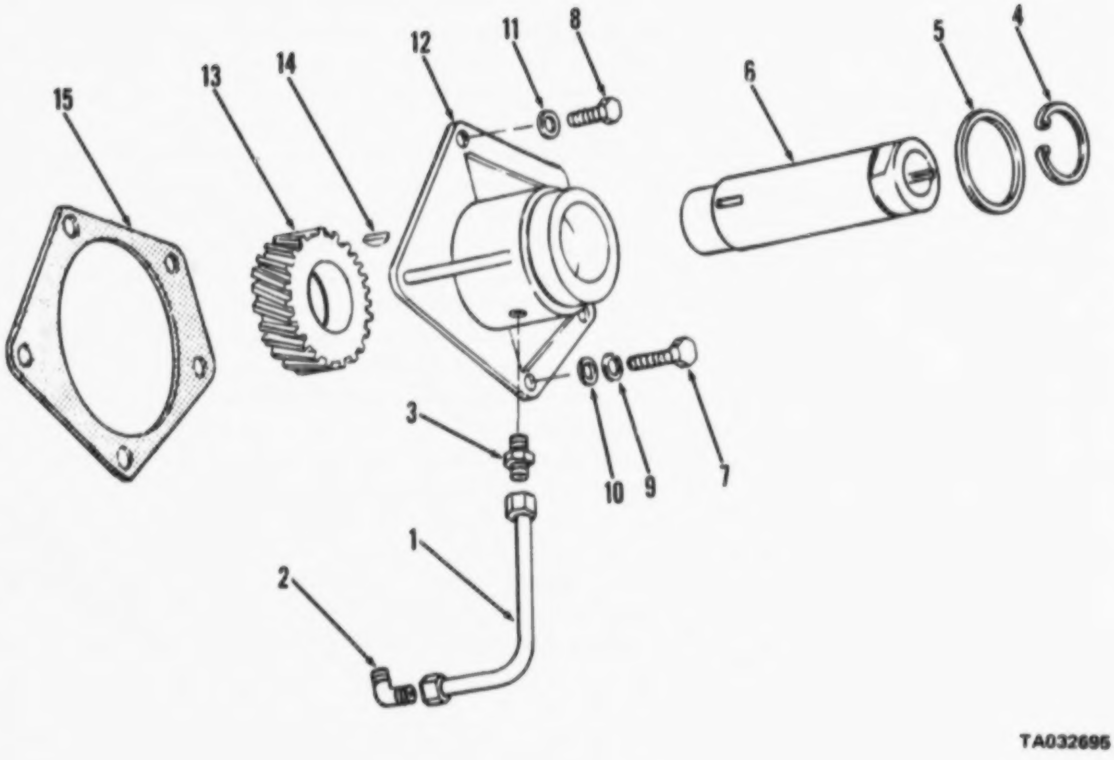

Figure 52. Blower drive

(1) ILLUSTRATION (a) FIG NO.	(b) ITEM NO.	(2) SMR CODE	(3) NATIONAL STOCK NUMBER	(4) PART NUMBER	(5) FSCM	(6) DESCRIPTION USABLE ON CODE	(7) U/M	(8) QTY INC IN UNIT
						FUNCTIONAL GROUP 29 BLOWER INSTALLATION		
52	1	XDOZZ		5119476	72582	.TUBE ASSY BLOWER DRIVE BRG OIL	EA	1
52	2	XBOZZ	4730-00-277-8273	137421	72582	.ELBOW,PIPE TO TUBE 1-4 OIL TUBE	EA	1
52	3	XBOZZ	4730-00-540-2612	730178	64104	.ADAPTER,STRAIGHT 1-4 OIL TUBE	EA	1

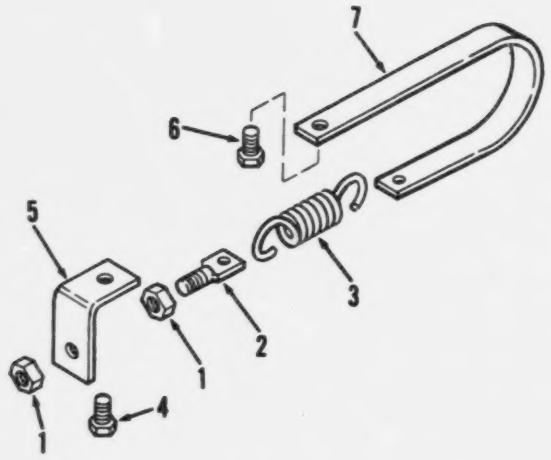

TA032696

Figure 53. Governor controls

(1) ILLUSTRATION (a) FIG NO.	(b) ITEM NO.	(2) SMR CODE	(3) NATIONAL STOCK NUMBER	(4) PART NUMBER	(5) FSCM	(6) DESCRIPTION USABLE ON CODE	(7) U/M	(8) QTY INC IN UNIT
						FUNCTIONAL GROUP 30 GOVERNOR AND CONTROLS, ENGINE		
53	1	XBOZZ	5305-00-942-2196	MS18154-60	96906	.NUT,PLAIN,HEXAGON 1-4-20 SPRING EYE..........................	EA	2
53	2	XDOZZ		5123762	72582	.EYE,SPRING THROTTLE BOOSTER.................................	EA	1
53	3	XBOZZ		5143344	72582	.SPRING,HEL EXT THROTTLE BOOSTER.............................	EA	1
53	4	XDOZZ	5305-00-725-2317	MS90728-64	96906	.SCREW,CAP,HEXAGON 3-8-16X1-1-2 BRACKET......................	EA	1
53	5	XDOZZ		5123878	72582	.BRACKET,SPRING THROTTLE BOOSTER.............................	EA	1
53	6	XBOZZ	5306-00-367-7312	5171045	72582	.BOLT,MACHINE 5-16-24X5 HANGER...............................	EA	1
53	7	XDOZZ		5186749	72582	.HANGER,SUPPORT THROTTLE BST SPRG............................	EA	1

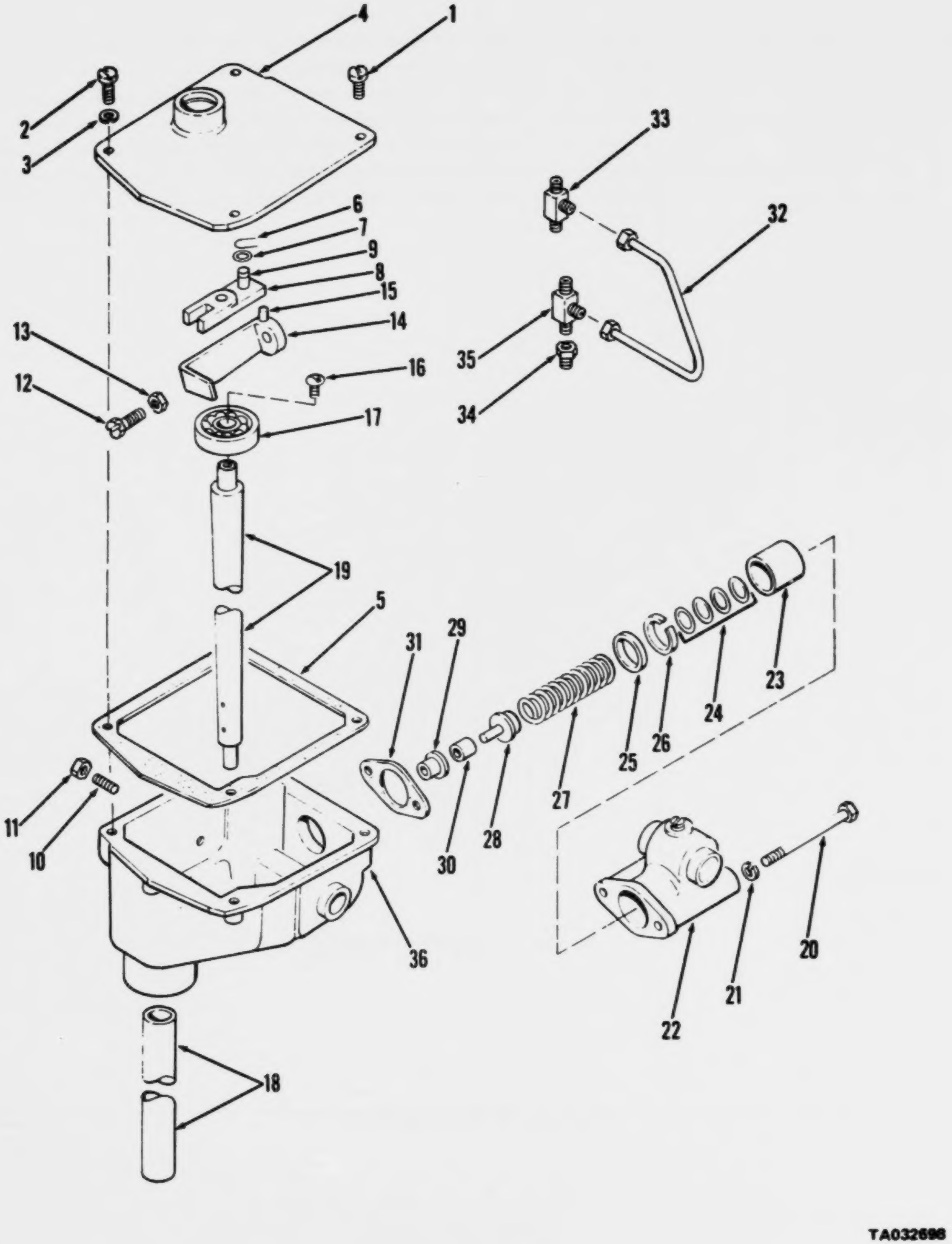

Figure 55. Governor housing

(1) ILLUSTRATION		(2)	(3)	(4)	(5)	(6)	(7)	(8)
(a) FIG NO.	(b) ITEM NO.	SMR CODE	NATIONAL STOCK NUMBER	PART NUMBER	FSCM	DESCRIPTION USABLE ON CODE	U/M	QTY INC IN UNIT
						FUNCTIONAL GROUP 30 GOVERNOR AND CONTROLS.		
						ENGINE		
55	32	PAOZZ	3805-00-332-5556	5144093	72582	.TUBE ASSEMBLY,SPEC HOUSING..................................	EA	1
55	33	XBOZZ	4730-00-522-2252	5166265	72582	.ELBOW,PIPE TO TUBE 1-8NPT UPPER HSG.........................	EA	1

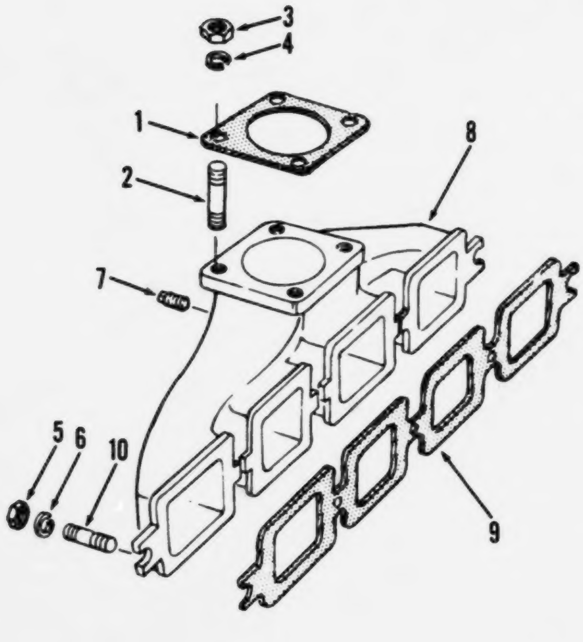

Figure 57. Manifold

(1) ILLUSTRATION (a) FIG NO.	(b) ITEM NO.	(2) SMR CODE	(3) NATIONAL STOCK NUMBER	(4) PART NUMBER	(5) FSCM	(6) DESCRIPTION USABLE ON CODE	(7) U/M	(8) QTY INC IN UNIT
						FUNCTIONAL GROUP 31 EXHAUST MANIFOLD		
57	1	PAOZZ	5330-00-007-6360	5145238	72582	GASKET EXHAUST	EA	1
57	2	XDOZZ	5307-00-085-4125	5105167	24617	STUD,FLANGE 3-8-16X1-3-4 FLANGE	EA	4
57	3	XDOZZ	5310-00-903-3992	114547	72582	NUT,BRASS,HEXAGON 3-8-24 EXHAUST FLANGE	EA	4
57	4	XDOZZ	5310-00-637-9541	MS35338-46	96906	WASHER,LOCK 3-8 FLANGE	EA	4
57	5	XBOZZ	5310-00-880-7745	MS51968-11	96906	NUT,PLAIN,HEXAGON 7-16-20 MANIFOLD	EA	5
57	6	XBOZZ	5310-01-058-3030	5188273	72582	WASHER,SPRING 1-1-4 OD MANIFOLD	EA	5
57	7	XBOZZ	4730-00-011-3175	113175	72582	PLUG,PIPE 1-8 NPT MANIFOLD	EA	1
57	8	PAOZZ	2815-00-902-1951	5175382	72582	MANIFOLD,EXHAUST CRANE ENGINE	EA	1
57	9	KFOZZ		5119006	72582	GASKET,MANIFOLD CRANE ENGINE : PART OF KIT P/N 5199792	EA	1
57	10	XBOZZ	5307-00-550-1879	51122899	72582	STUD,PLAIN MANIFOLD	EA	5

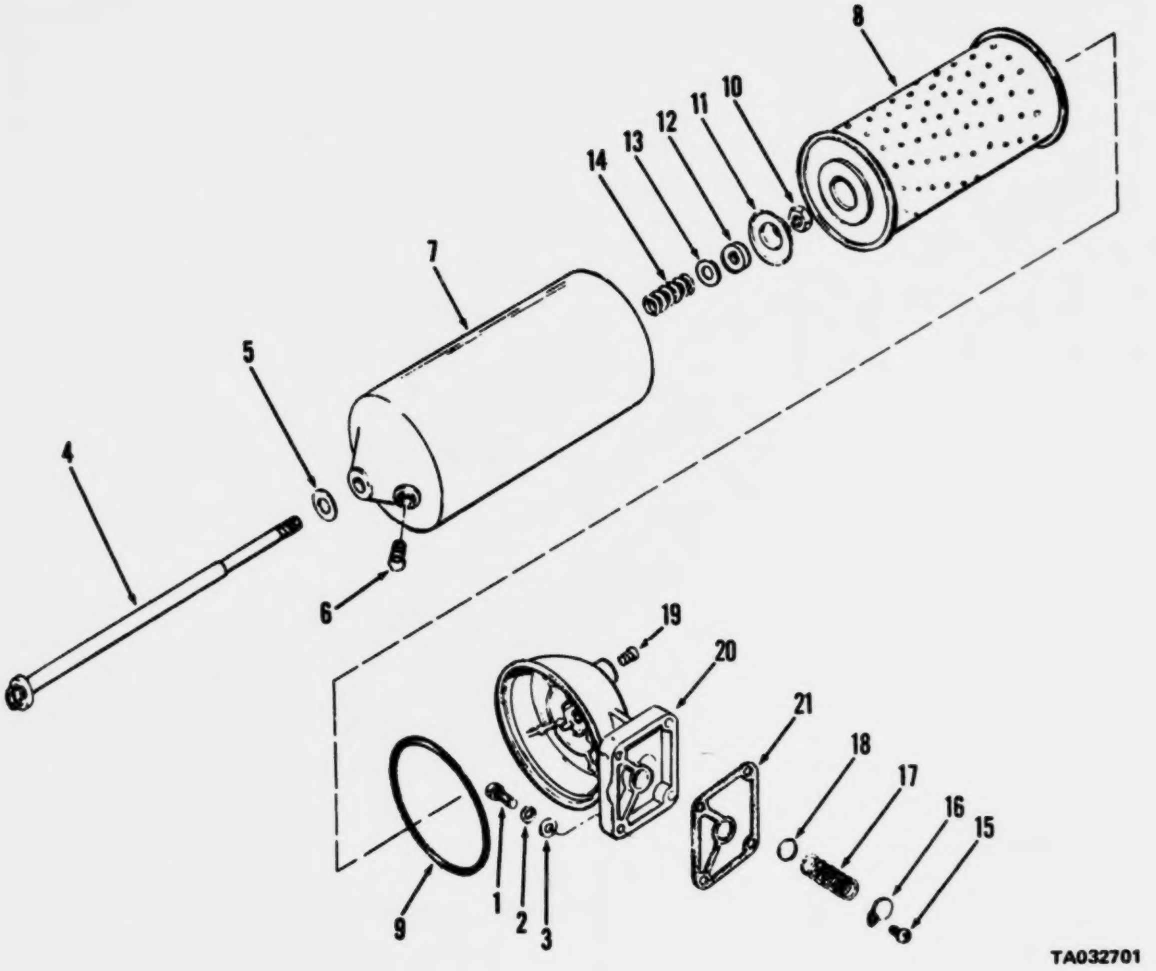

Figure 58. Filter assembly

(1) ILLUSTRATION		(2)	(3)	(4)	(5)	(6)	(7)	(8)
(a) FIG NO.	(b) ITEM NO.	SMR CODE	FEDERAL STOCK NUMBER	PART NUMBER	FSCM	DESCRIPTION USABLE ON CODE	U/M	QTY INC IN UNIT
						FUNCTIONAL GROUP 32 LUBRICATION SYSTEM, ENGINE,CRANE		
58		PAOZZ	2940-00-944-2082	5134392	72582	FILTER ASSEMBLY OIL FILTER....................................	EA	4
58	1	XBOZZ		186628	72582	.SCREW,CAP, HEXAGON HD: 3-8-16X1-1/2, FILTER................	EA	4
58	2	XBOZZ		103341	72582	.WASHER,FLAT, 3-8, FILTER..................................	EA	4
58	3	XBOZZ		103321	72582	.WASHER,LOCK 3-8,FILTER....................................	EA	4
58	4	XBOZZ	5306-00-870-6222	5120740	72582	.BOLT,SHOULDER OIL FILTER..................................	EA	1
58	5	PAOZZ	5330-00-833-0870	6437298	72582	.GASKET ; OIL FILTER.......................................	EA	1
58	6	XBOZZ	4820-00-360-8299	5570480	72582	.VALVE,PLUG OIL FILTER.....................................	EA	1
58	7	XBOZZ	2940-00-019-4775	5574008	72582	.SHELL,FILTER OIL FILTER...................................	EA	1
58	8	PAOZZ	2940-00-580-6283	MS35802-3	96906	.FILTER ELEMENT OIL FILTER.................................	EA	1
58	9	PAOZZ	5330-00-290-7860	5571024	72582	..GASKET OIL FILTER..	EA	1
58	10	XBOZZ	5310-00-136-5712	122366	72582	.NUT,PLAIN,HEXAGON 5-8-18 CENTER POST......................	EA	1
58	11	XBOZZ	5330-00-629-6340	5187309	72582	.RETAINER,SPRING OIL FILTER................................	EA	1
58	12	PAOZZ	5330-00-604-8094	5187310	72582	.PACKING,PREFORMED ELEMENT.................................	EA	1
58	13	XBOZZ	5365-00-262-4701	5154538	72582	.WASHER,FLAT RETAINER......................................	EA	1
58	14	XBOZZ	5360-00-801-8731	5187308	72582	.SPRING,HELICAL,COMP FILTER ELEMENT........................	EA	1
58	15	KFOZZ		450865	72582	SCREW,MACHINE RETAINER : PART OF KIT P/N 5198303............ .SCREW,MACHINE RETAINER : PART OF KIT P/N..................	EA	1
58	16	KFDZZ		5574736	72582	RETAINER,VALVE OIL FILTER : PART OF KIT P/N 5198303......... .RETAINER,VALVE OIL FILTER : PART OF KIT...................	EA	1 1
58	17	KFOZZ		5134477	72582	SPRING,HELICAL BYPASS VALVE : PART OF KIT P/N 5198303....... .SPRING,HELICAL BYPASS VALVE : PART OF KIT.................	EA	1
58	18	KFOZZ		5133431	72582	VALVE,BYPASS OIL FILTER : PART OF KIT 5198303............... .VALVE,BYPASS OIL FILTER : PART OF KIT.....................	EA	1
58	19	XBOZZ	4730-00-187-4207	8327194	19207	.PLUG,PIPE 1-4 SQ HD FILTER ADAPTER........................	EA	1
58	20	XBOZZ	2815-00-131-5586	5134908	72582	.ADAPTER,COVER OIL FILTER..................................	EA	1
58	21	KFOZZ		5121205	72582	GASKET,FILTER MOUNTING : PART OF KIT P/N 5198303 AND 5199792 .GASKET,FILTER MOUNTING : PART OF KIT P/N..................	EA	1
58		PAOZZ	2940-00-908-9733	5198303	72582	PART KIT,OIL COOLE OIL FILTER BYPASS.......................	EA	1
58	15					SCREW,MACHINE	EA	1
58	16					RETAINER,VALVE	EA	1
58	17					SPRING,HELICAL	EA	1
58	18					VALVE,BYPASS	EA	1
58	21					GASKET,FILTER	EA	1

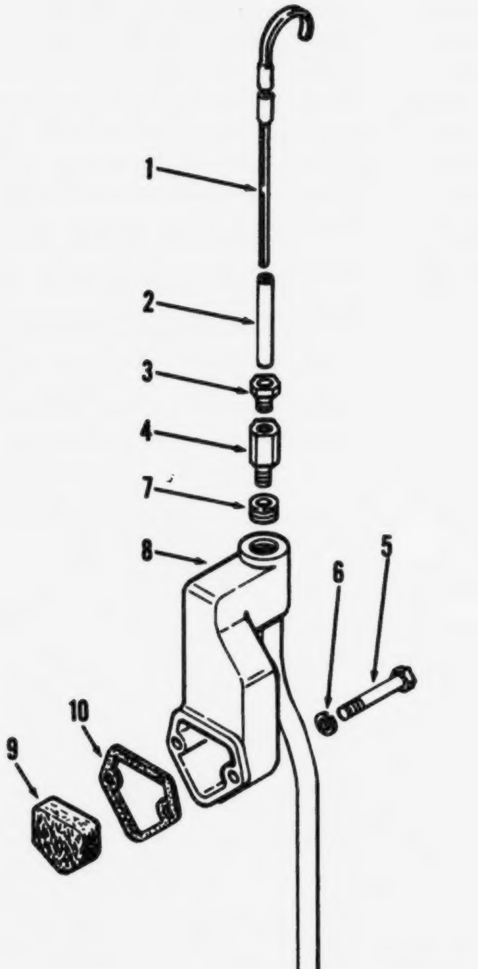

Figure 60. Breather and oil level gage

(1) ILLUSTRATION (a) FIG NO.	(b) ITEM NO.	(2) SMR CODE	(3) NATIONAL STOCK NUMBER	(4) PART NUMBER	(5) FSCM	(6) DESCRIPTION USABLE ON CODE	(7) U/M	(8) QTY INC IN UNIT
						FUNCTIONAL GROUP 32 LUBRICATION SYSTEM, ENGINE,CRANE		
60	1	XBOZZ	6680-00-873-6649	5109252	72582	GAGE,ROD,LIQUIDLEV CRANE ENGINE	EA	1
60	2	XBOZZ	2520-00-424-4015	5121062	72582	GUIDE,GAGE OIL LEVEL	EA	1
60	3	XBOZZ		5109621	72582	ADAPTER,GAGE OIL LEVEL	EA	1
60	4	XBOZZ		137401	72582	NUT,TUBE 1-2 ADAPTER	EA	1
60	5	XBOZZ	5306-00-225-8506	MS90725-42	96906	BOLT,MACHINE 5-16-18X2-1-8 BREATHER	EA	2
60	6	PAOZZ	5310-00-407-9566	MS35338-45	96906	WASHER,LOCK 5-16 BREATHER	EA	2
60	7	XBOZZ	5340-00-921-5379	5150829	72582	PLUG,CUP BREATHER PIPE	EA	1
60	8	XBOZZ		5116392	72582	PIPE,BREATHER OIL PAN	EA	1
60	9	PAOZZ	2940-00-055-0832	5163518	72582	FILTER,AIR INTAKE E OIL PIPE	EA	1
60	10	KFOZZ		5116351	72582	GASKET,PIPE BREATHER PIPE PART OF KIT 5199732	EA	1

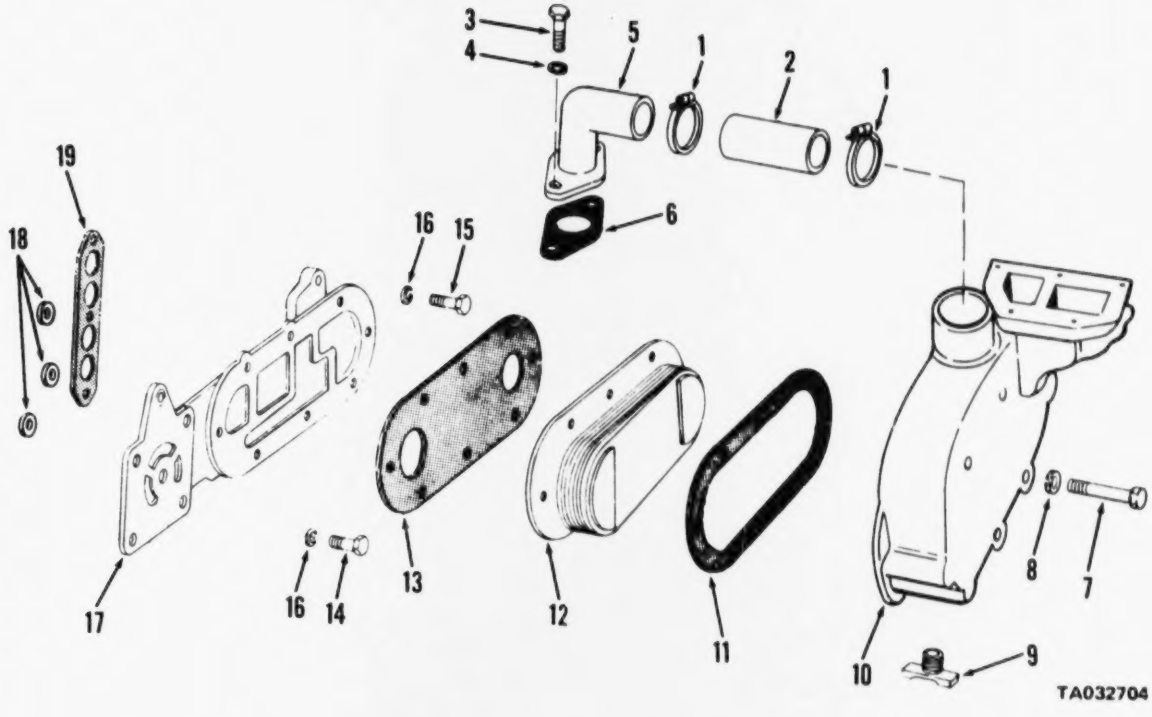

Figure 61. Oil cooler and connections

(1) ILLUSTRATION (a) FIG NO.	(b) ITEM NO.	(2) SMR CODE	(3) NATIONAL STOCK NUMBER	(4) PART NUMBER	(5) FSCM	(6) DESCRIPTION USABLE ON CODE	(7) U/M	(8) QTY INC IN UNIT
						FUNCTIONAL GROUP 32 LUBRICATION SYSTEM, ENGINE,CRANE		
61	3	XDOZZ	5306-00-225-8500	MS90725-35	96906	BOLT,MACHINE 5-16-18X1-1-8 OIL COOLER ELBOW..................	EA	2
61	4	XDOZZ	5310-00-407-9566	MS35338-45	96906	WASHER,LOCK 5-16 OIL COOLER ELBOW............................	EA	2
61	5	XBOZZ	4730-01-028-8804	5121148	72582	ELBOW,DRAINAGE,PIPE WATER OUTLET.............................	EA	1
61	6	KFOZZ		5116357	72582	GASKET,ELBOW OIL COOLER......................................	EA	1
61	9	XBOZZ	4820-00-477-9779	103647	72582	COCK,DRAIN COOLER HSG..	EA	1

AMC FORM 1779, 1 OCT 73 (REPLACES AMC TEST FORMS 1753 AND 1754, 6 APR 70, WHICH WILL BE USED UNTIL 1 JUL 74)

REPAIR PARTS LIST

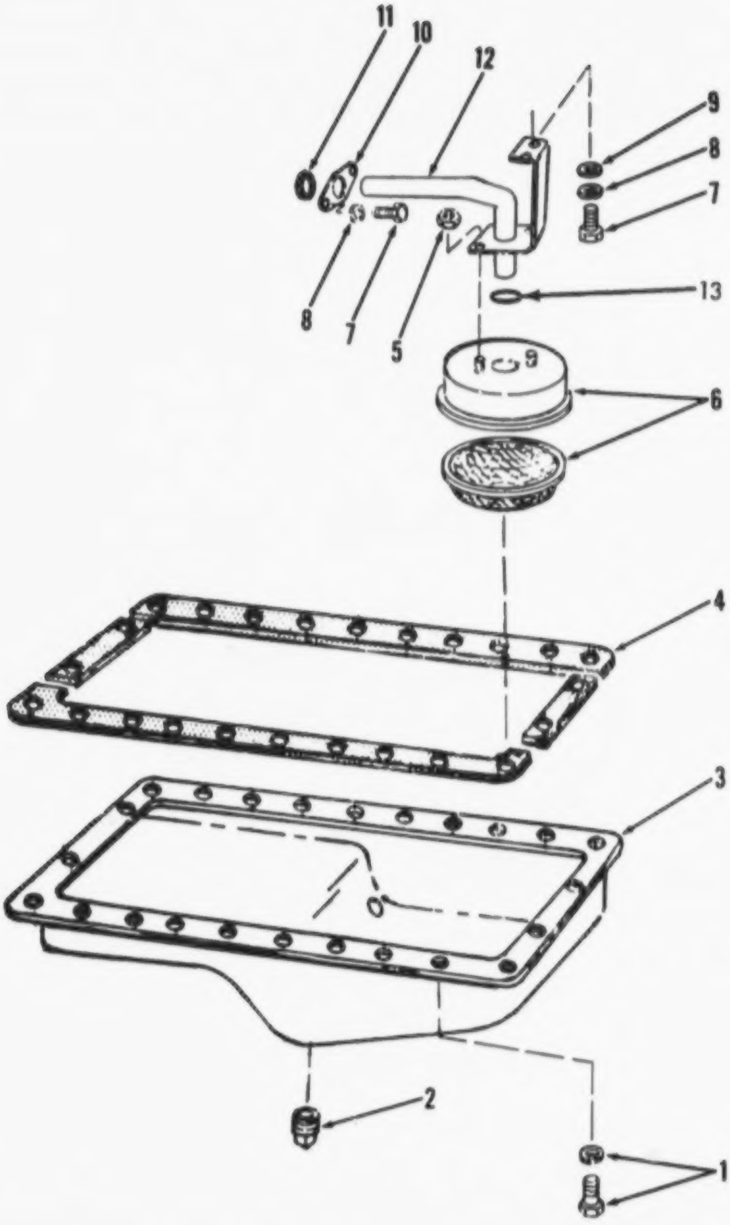

Figure 62. Oil pan, inlet screen and pipe

(1) ILLUSTRATION (a) FIG NO.	(b) ITEM NO.	(2) SMR CODE	(3) FEDERAL STOCK NUMBER	(4) PART NUMBER	(5) FSCM	(6) DESCRIPTION USABLE ON CODE	(7) U/M	(8) QTY INC IN UNIT
						FUNCTIONAL GROUP 32 LUBRICATION SYSTEM, ENGINE,CRANE		
62	2	XBOZZ	4730-00-289-5176	MS49005-8	96906	PLUG,PIPE 1-2-14 OIL PAN DRAIN..............................	EA	2

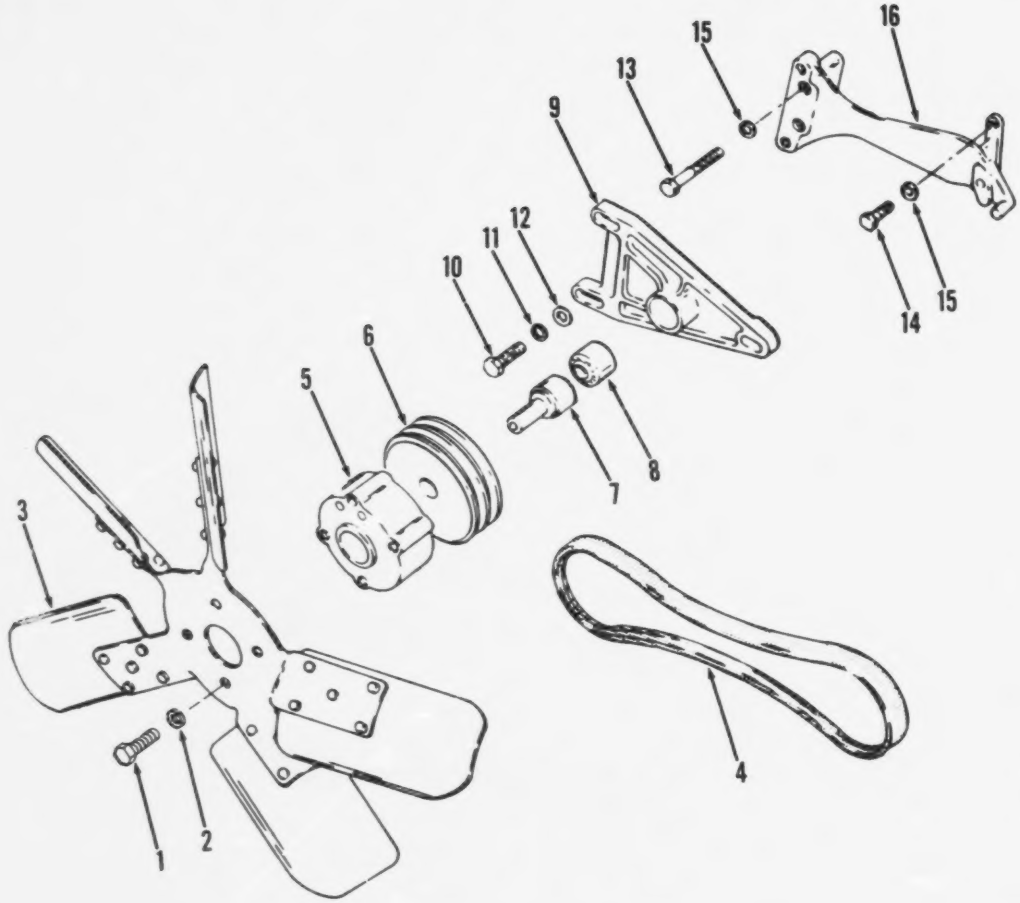

Figure 63. Fan, pulley and hub

(1) ILLUSTRATION (a) FIG NO.	(b) ITEM NO.	(2) SMR CODE	(3) NATIONAL STOCK NUMBER	(4) PART NUMBER	(5) FSCM	(6) DESCRIPTION USABLE ON CODE	(7) U/M	(8) QTY INC IN UNIT
						FUNCTIONAL GROUP 33 COOLING SYSTEM,ENGINE, CRANE		
63	1	XBOZZ	5306-00-226-4826	MS9C728-33	96906	BOLT,MACHINE 5-16-18X7-8 FAN	EA	4
63	2	XBOZZ	5310-00-407-9566	MS35338-45	96906	WASHER,LOCK 5-16 FAN	EA	4
63	3	XDOZZ	2930-00-055-2668	5145904	72582	BLADE,FAN,DIESEL EN CRANE	EA	1
63	4	XBOZZ		5146723	72582	BELT SET FAN PULLEY	EA	1
63	5	XBOZZ		51326C1	72582	HUB ASSY,FAN CRANE ENGINE	EA	1
63	6	XDOZZ		5116483	72582	.PULLEY,FAN CRANE ENGINE	EA	1
63	7	XDOZZ		90569	72582	.SHAFT ASSY INCL BEARING	EA	1
63	8	XBOZZ		88580351648C	43334	..BEARING,SHAFT FAN	EA	1
63	9	XDOZZ		5133063	72582	.BRACKET,SHAFT FAN	EA	1
63	10	XBOZZ	5305-00-688-2111	MS9C728-63	96906	SCREW,CAP,HEXAGON 3-8-16X1-3-8 BRACKET	EA	3
63	11	XDOZZ	5310-00-637-9541	MS35338-46	96906	WASHER,LOCK 3-8 BRACKET	EA	3
63	12	XDOZZ	2920-00-416-4070	5164256	72582	SPACER,BRACKET FAN	EA	1
63	13	XBOZZ		186262	72582	SCREW,CAP,HEXAGON 3-8-16X3-1-4 SUPPORT	EA	2
63	14	XBOZZ	5306-00-940-9079	9409079	72582	BOLT,SELF-LOCKING 3-8-16X7-8 SUPPORT	EA	2
63	15	XBOZZ	5310-00-637-9541	MS35338-46	96906	WASHER,LOCK 3-8 SUPPORT	EA	4
63	16	XBOZZ	2930-00-901-1319	5126868	72582	SUPPORT,FAN CRANE ENGINE	EA	1

AMC FORM 1779, 1 OCT 73 (REPLACES AMC TEST FORMS 1793 AND 1794, 6 APR 70, WHICH WILL BE USED UNTIL 1 JUL 74)

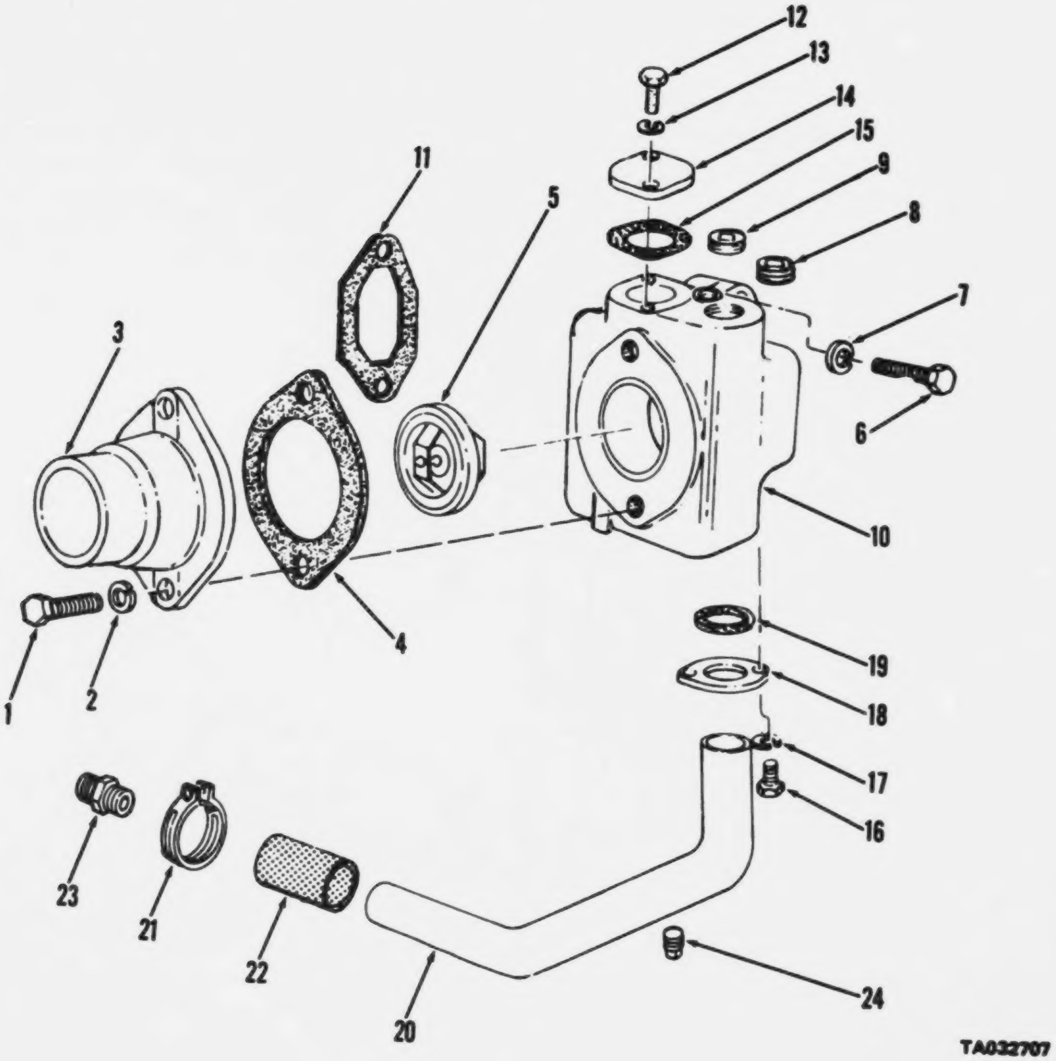

Figure 64. Thermostat, housing and related parts

(1) ILLUSTRATION (a) FIG NO.	(b) ITEM NO.	(2) SMR CODE	(3) NATIONAL STOCK NUMBER	(4) PART NUMBER	(5) FSCM	(6) DESCRIPTION USABLE ON CODE	(7) U/M	(8) QTY INC IN UNIT
						FUNCTIONAL GROUP 33 COOLING SYSTEM,ENGINE, CRANE		
64	1	XBOZZ	5305-00-543-2419	186619	72582	SCREW,CAP,HEXAGON 3-8-16X1-1-8 OUTLET ELBOW..................	EA	2
64	2	XBOZZ	5310-00-637-9541	MS35338-46	96906	WASHER,LOCK 3-8 OUTLET ELBOW.................................	EA	2
64	3	XBOZZ		5121228	72582	FLANGE,OUTLET WATER..	EA	1
64	4	KFOZZ		5116092	72582	GASKET,FLANGE WATER OUTLET PART OF KIT 5199792............	EA	1
64	5	PAOZZ	6620-00-792-9032	3146655	27462	THERMOSTAT,FLOW CON 170 DEGREE...............................	EA	1
64	6	XBOZZ	5305-00-019-7069	108608	72582	SCREW,CAP,HEXAGON 3-8-16X2-1-8 HOUSING.......................	EA	2
64	7	XBOZZ	5310-00-637-9541	MS35338-46	96906	WASHER,LOCK 3-8 HOUSING......................................	EA	2
64	8	XBOZZ	4730-00-289-5176	MS45005-8	96906	PLUG,PIPE 1-2NPT HOUSING.....................................	EA	2
64	9	XBOZZ	4730-00-152-6073	5145014	72582	PLUG,PIPE 3-8NPT HOUSING.....................................	EA	2
64	10	XDOZZ	2930-00-112-0437	5123247	72582	HOUSING THERMO ENGINE..	EA	1
64	11	KFOZZ		5116242	72582	GASKET THERMO HOUSING PART OF KIT P/N 5199792............	EA	1
64	12	PAOZZ	5306-01-012-2284	186618	72582	BOLT,SPECIAL 5-16-18X5-8.....................................	EA	2
64	13	XBOZZ	5310-00-407-9566	MS35338-45	96906	WASHER,LOCK 5-16 COVER.......................................	EA	2
64	14	XDOZZ		5119246	72582	FLANGE HOUSING THERMOSTAT....................................	EA	1
64	15	KFOZZ		5128139	72592	GASKET FLANGE HOUSING PART OF KIT P/N 5199792............	EA	1
64	16	XBOZZ	5306-00-226-4826	MS90728-33	96906	BOLT,MACHINE 5-16-18X7-8 FLANGE..............................	EA	2
64	17	XBOZZ	5310-00-407-9566	MS35338-45	96906	WASHER,LOCK 5-16 FLANGE......................................	EA	1
64	18	PBOZZ	4730-00-902-1949	5115425	72582	FLANGE PIPE BYPASS...	EA	1
64	19	KFOZZ		5184301	72582	SEAL,RING FLANGE PART OF KIT P/N 5199792.................	EA	1
64	20	XBOZZ		5136414	72582	TUBE,BYPASS WATER..	EA	1
64	21	XBOZZ	4730-00-202-8970	5186840	72582	CLAMP,HOSE WATER BYPASS......................................	EA	2
64	22	PCOZZ	4720-01-006-3350	5169721	72582	HOSE,NONMETALLIC 7-8 IDX1-3-4 LG BYPASS......................	EA	1
64	23	XDOZZ		5144702	72582	ADAPTER,HOSE 3-4NPT BYPASS...................................	EA	1
64	24	XBOZZ	4730-00-148-4975	5142549	72582	PLUG,PIPE 3-4-14 NPT BYPASS..................................	EA	1

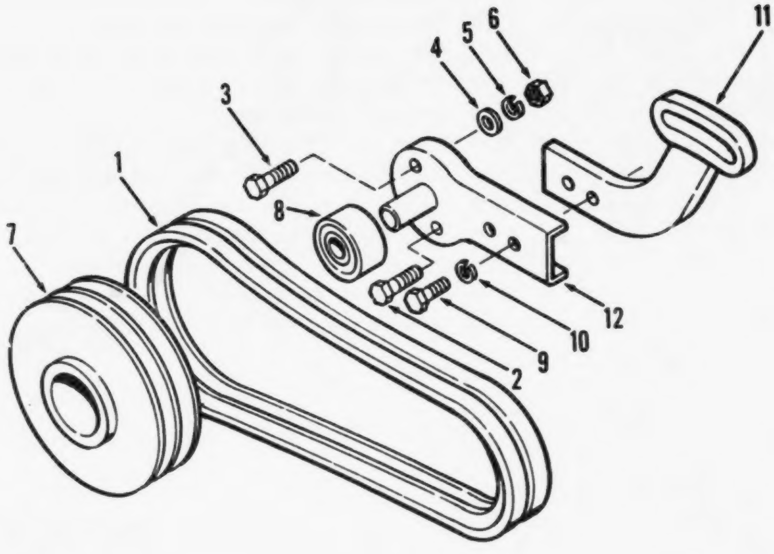

Figure 65. Water pump idler

(1) ILLUSTRATION (a) FIG NO.	(b) ITEM NO.	(2) SMR CODE	(3) NATIONAL STOCK NUMBER	(4) PART NUMBER	(5) FSCM	(6) DESCRIPTION USABLE ON CODE	(7) U/M	(8) QTY INC IN UNIT
						FUNCTIONAL GROUP 33 COOLING SYSTEM,ENGINE, CRANE		
65	1	PAOZZ	3030-00-778-1241	5135031	72582	BELTS,V,MATCHED SET WATER PUMP	EA	1
65	2	XBOZZ	5306-00-224-1113	181371	72582	SCREW CAP HEX HD 3-8-24 X 1-3-8 PULLEY	EA	1
65	3	XBOZZ		181377	72582	SCREW CAP HEX HD 3-8-24 X 1-3-4 PULLEY	EA	1
65	4	XBOZZ		103341	72582	WASHER,FLAT, 3-8, PULLEY	EA	2
65	5	XBOZZ	5310-00-637-9541	103321	72582	WASHER LOCK 3-8 PULLEY	EA	2
65	6	XBOZZ		117049	72582	NUT PLAIN HEX 3-8-24 PULLEY	EA	2
65	7	XBOZZ		5148444	72582	PULLEY PUMP	EA	1
65	8	XBOZZ		908140	72582	BEARING PULLEY	EA	1
65	9	XBOZZ	5305-00-269-3210	MS90725-59	96906	SCREW,CAP,HEXAGON 3-8-16X7-8 PULLEY BRACKET	EA	3
65	10	XBOZZ	5310-00-637-9541	MS35338-46	96906	WASHER,LOCK 3-8 PULLEY BRACKET	EA	3
65	11	XDOZZ		5136458	72582	BRACKET,UPPER PUMP PULLEY	EA	1
65	12	XDOZZ		5136500	72582	BRACKET,LOWER PUMP PULLEY	EA	1

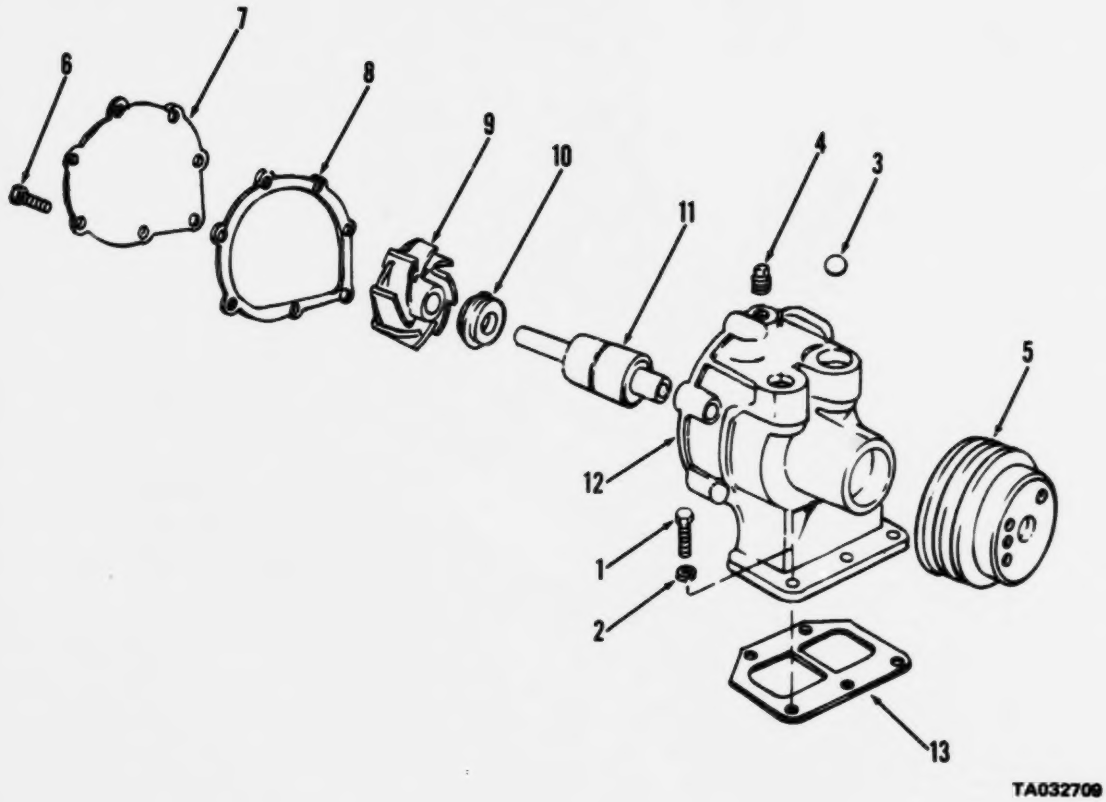

Figure 66. Water pump assembly

(1) ILLUSTRATION (a) FIG NO.	(b) ITEM NO.	(2) SMR CODE	(3) NATIONAL STOCK NUMBER	(4) PART NUMBER	(5) FSCM	(6) DESCRIPTION USABLE ON CODE	(7) U/M	(8) QTY INC IN UNIT
						FUNCTIONAL GROUP 33 COOLING SYSTEM,ENGINE, CRANE		
66	1	XBOZZ	5306-00-226-4826	186625	72582	SCREW CAP HEX HD 3-8-16 X 7-8 WATER PUMP MTG................	EA	5
66	2	XBOZZ		103320	72582	WASHER LOCK 5-16 PUMP MTG................................	EA	5
66	3	XDOZZ		5144920	72582	BALL RUBBER WATER PUMP...................................	EA	1
66		PAOFZ	4320-00-275-4209	5148442	72582	PUMP,CENTRIFUGAL WATER...................................	EA	1
66	4	XBOZZ	4730-00-152-6233	5145009	72582	.PLUG PIPE 1-8 NPT BODY..................................	EA	1
66	5	XBOZZ	3020-00-230-0066	5144503	72582	.PULLEY GROOVE PUMP......................................	EA	1
66	13	XBOZZ	5330-00-235-4885	5133107	72582	GASKET PUMP MTG..	EA	1
66		PBOZZ	2930-00-444-0160	5199534	72582	PARTS KIT,ENGINE	EA	1

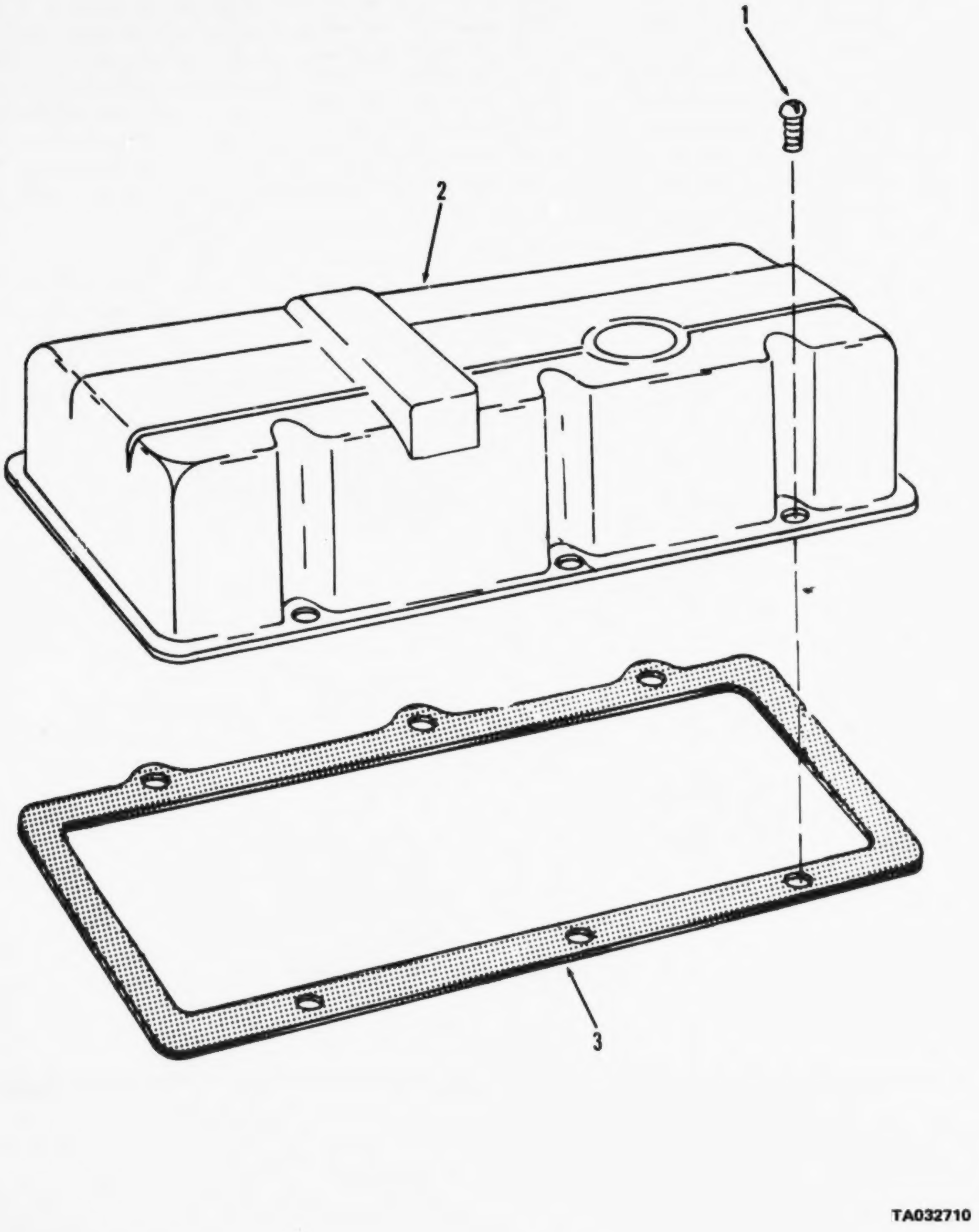

Figure 67. Cover, rocker arm

(1) ILLUSTRATION (a) FIG NO.	(b) ITEM NO.	(2) SMR CODE	(3) NATIONAL STOCK NUMBER	(4) PART NUMBER	(5) FSCM	(6) DESCRIPTION USABLE ON CODE	(7) U/M	(8) QTY INC IN UNIT
						FUNCTIONAL GROUP 34 ENGINE AND RELATED PARTS,CRANE		
67	1	XBOZZ	2815-00-074-1929	5100104	72582	SCREW ASSY ROCKER COVER..................................	EA	6
67	2	XDOZZ		5125353	72582	COVER,ROCKER CRANE ENGINE................................	EA	1
67	3	KFOZZ		5147506	72582	GASKET COVER CRANE ENGINE : PART OF KITS P/N 5199792 AND 5199812...	EA	1

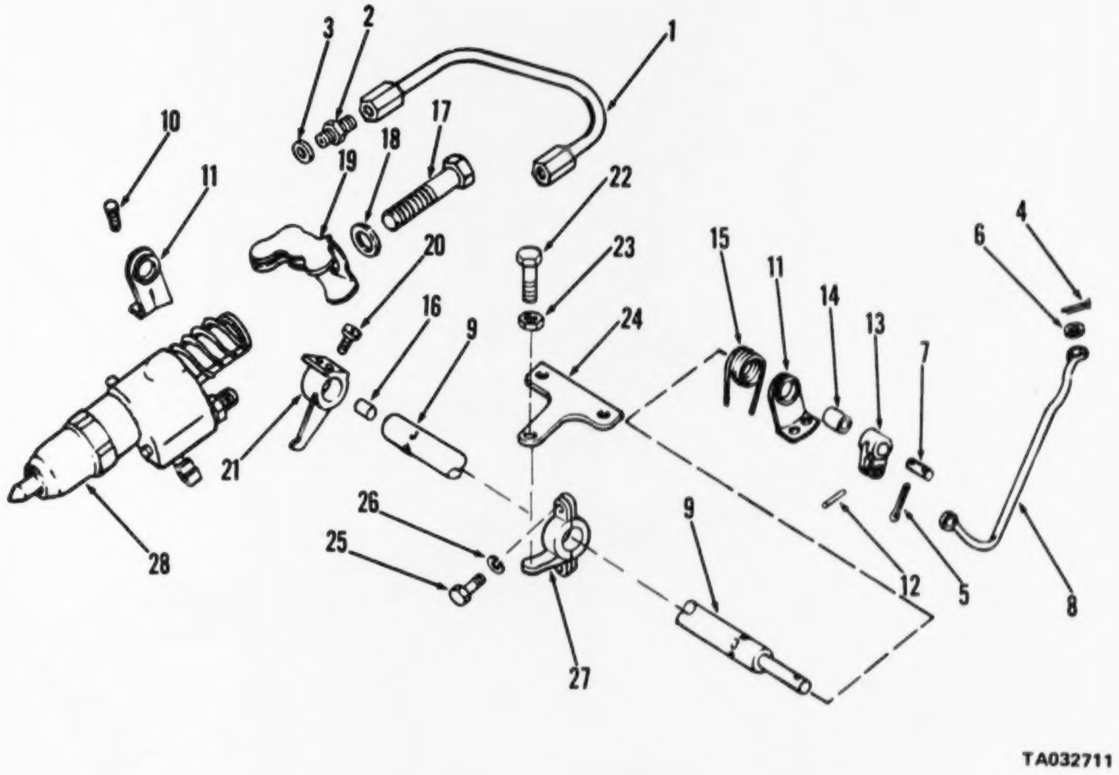

Figure 68. Injector levers and tubes

(1) ILLUSTRATION (a) FIG NO.	(b) ITEM NO.	(2) SMR CODE	(3) NATIONAL STOCK NUMBER	(4) PART NUMBER	(5) FSCM	(6) DESCRIPTION USABLE ON CODE	(7) U/M	(8) QTY INC IN UNIT
						FUNCTIONAL GROUP 34 ENGINE AND RELATED PARTS,CRANE		
68	1	XDOZZ	4710-00-752-8984	5116204	72582	TUBE ASSEMBLY METAL INJECTOR INLET AND OUTLET................	EA	8
68	2	XBOZZ	4730-00-142-1278	5152138	72582	ADAPTER,STRAIT TU INJECTOR...............................	EA	8
68	3	XBOZZ	5310-00-193-9753	5226029	72582	WASHER,FLAT PIPE..	EA	8
68	4	XDOZZ	5315-00-839-2325	112726	24617	PIN,COTTER 1-16X1-2 LINK..................................	EA	1
68	13	XBOZZ	2990-00-501-1290	5116267	72582	.LEVER,REMOTE INJECTOR....................................	EA	1
68	14	XDOZZ		5116266	72582	.SPACER,LEVER INJ CONTROL.................................	EA	1
68	15	PAOZZ	5360-00-055-2657	5116265	72582	.SPRING	EA	1

AMC FORM 1779, 1 OCT 73 (REPLACES AMC TEST FORMS 1763 AND 1764, 8 APR 73, WHICH WILL BE USED UNTIL 1 JUL 74)

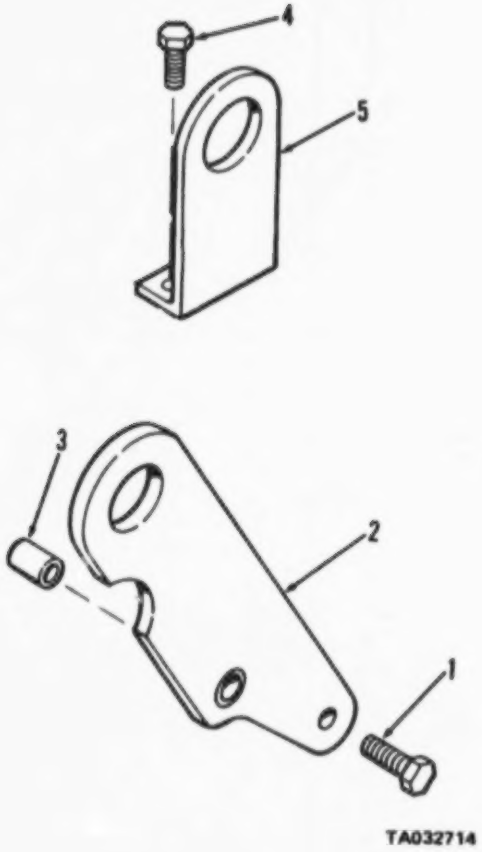

Figure 71. Lifting brackets

(1) ILLUSTRATION (a) FIG NO.	(b) ITEM NO.	(2) SMR CODE	(3) NATIONAL STOCK NUMBER	(4) PART NUMBER	(5) FSCM	(6) DESCRIPTION USABLE ON CODE	(7) U/M	(8) QTY INC IN UNIT
						FUNCTIONAL GROUP 34 ENGINE AND RELATED PARTS,CRANE		
71	1	XBOZZ	5306-00-940-9028	9409028	72582	SCREW CAP HEX HD 3-8 16 X1 LIFTING BRACKET.................	EA	2
71	2	XDOZZ		5129750	72582	BRACKET LIFTING..	EA	1
71	3	XDOZZ	2920-00-416-4070	5164294	72582	SPACER BRACKET...	EA	2
71	4	XBOZZ	5306-00-940-9028	9409028	72582	SCREW CAP HEX..	EA	2
71	5	XBOZZ		5119379	72582	BRACKET LIFTING..	EA	1

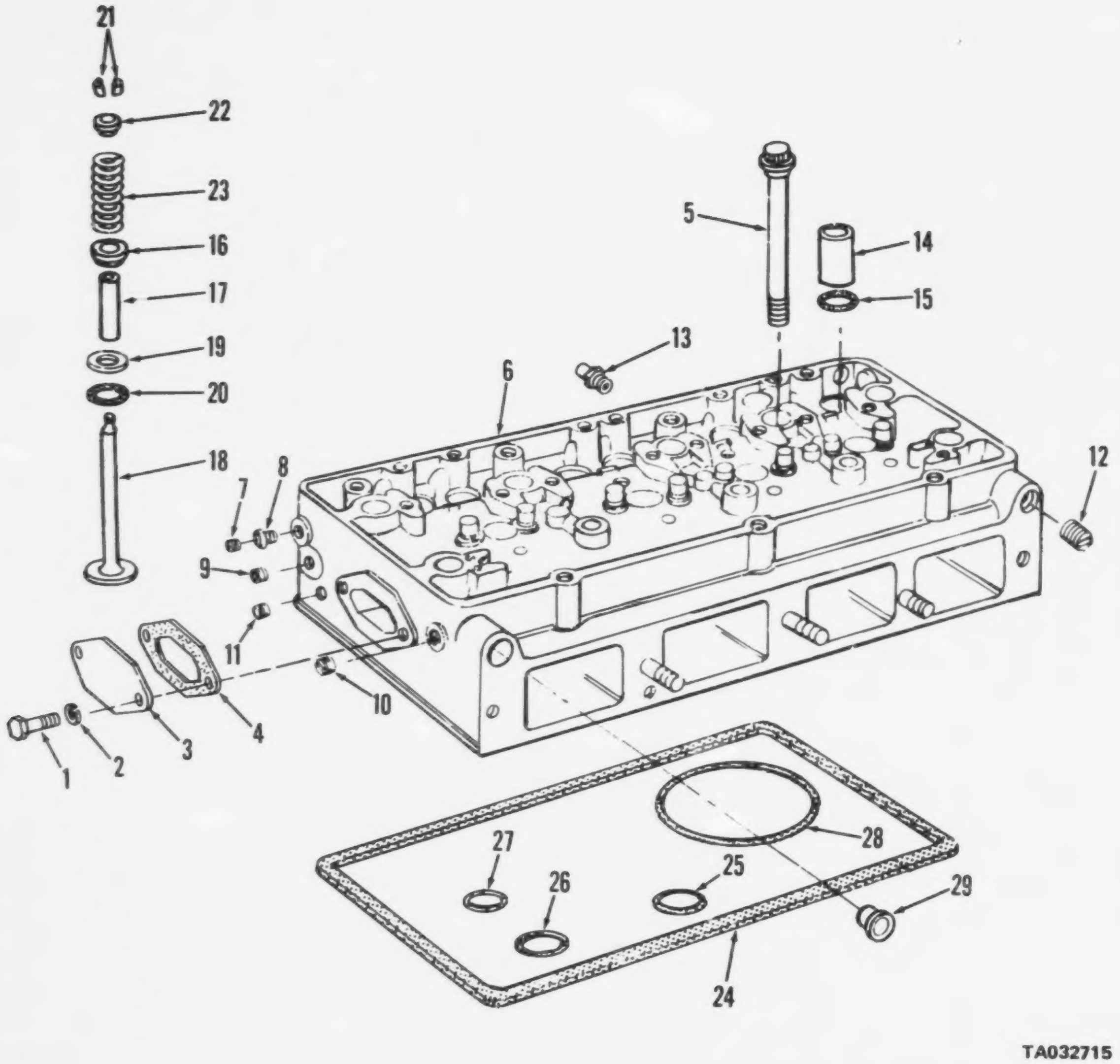

Figure 72. Cylinder head and exhaust valves

(1) ILLUSTRATION (a) FIG NO.	(b) ITEM NO.	(2) SMR CODE	(3) NATIONAL STOCK NUMBER	(4) PART NUMBER	(5) FSCM	(6) DESCRIPTION USABLE ON CODE	(7) U/M	(8) QTY INC IN UNIT
						FUNCTIONAL GROUP 34 ENGINE AND RELATED PARTS,CRANE		
72	1	PAOZZ	5310-00-761-6882	MS51967-2	96906	SCREW,CAP,HEXAGON 3-8-16X1 WATER HOLE COVER..................	EA	2
72	2	PAOZZ	5310-00-637-9541	MS35338-46	96906	WASHER,LOCK 3-8 WATER HOLE COVER..........................	EA	2
72	3	XDOZZ		5109707	72582	COVER,WATER HOL CYLINDER HEAD..............................	EA	1
72	4	KFOZZ		5116242	72582	GASKET COVER WATER HOLE....................................	EA	1

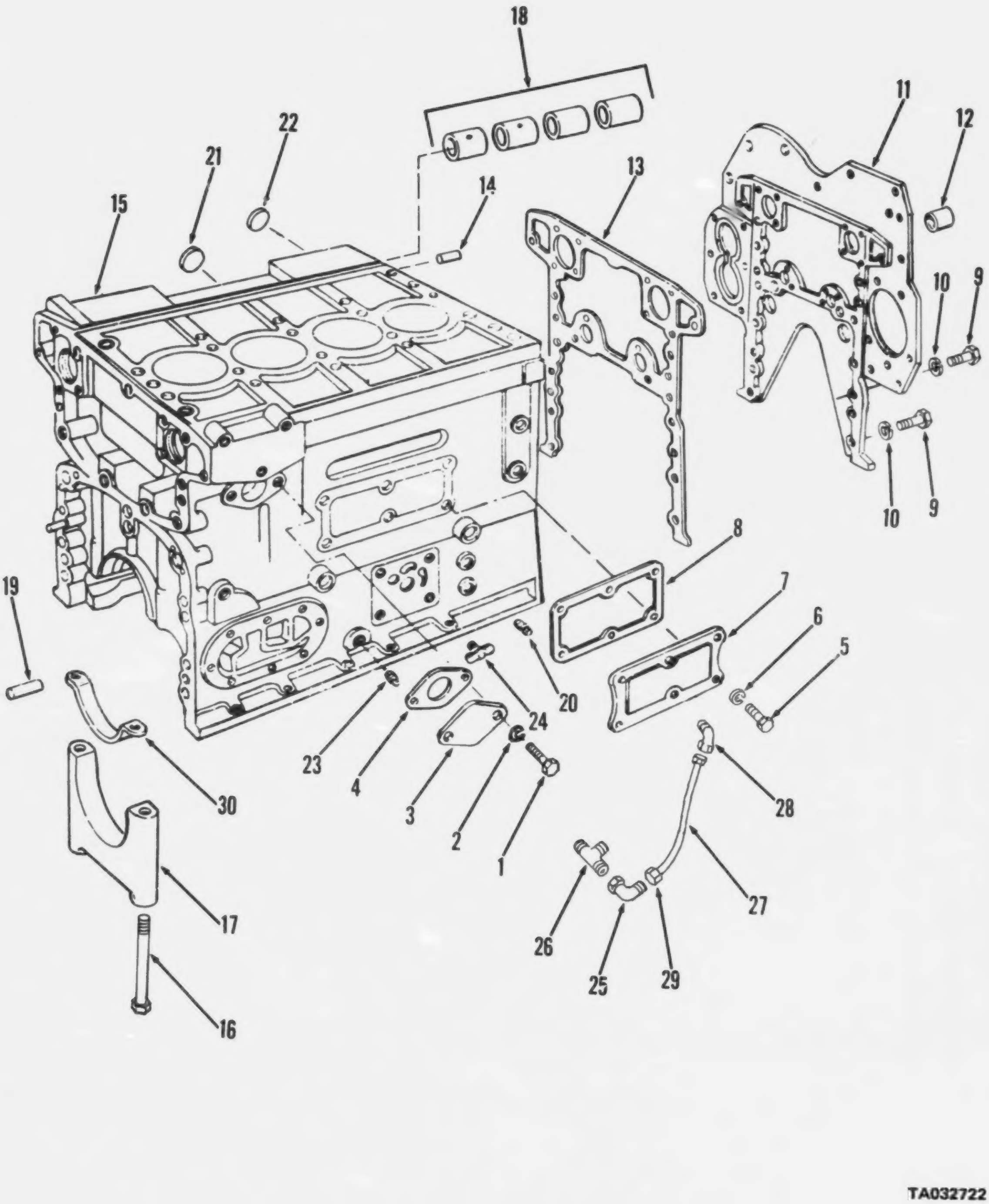

Figure 79. Crankcase and related parts

(1) ILLUSTRATION (a) FIG NO.	(b) ITEM NO.	(2) SMR CODE	(3) NATIONAL STOCK NUMBER	(4) PART NUMBER	(5) FSCM	(6) DESCRIPTION USABLE ON CODE	(7) U/M	(8) QTY INC IN UNIT
						FUNCTIONAL GROUP 34 ENGINE AND RELATED PARTS, CRANE		
79	27	XDOZZ		5133286	72582	TUBE,DRAIN AIR BOX 12 LG.....	EA	1
79	28	PAOZZ	4730-00-277-8273	8027129	19207	ELBOW,PIPE TO TUBE 1-4 TUBE 90 DEG AIR BOX DRAIN.....	EA	1
79	29	XBOZZ		137397	72582	NUT,FLARE 1-4 TUBE AIR BOX DRAIN.....	EA	1

AMC FORM 1775, 1 OCT 73 (REPLACES AMC TEST FORMS 1753 AND 1754, 6 APR 70, WHICH WILL BE USED UNTIL 1 JUL 74)

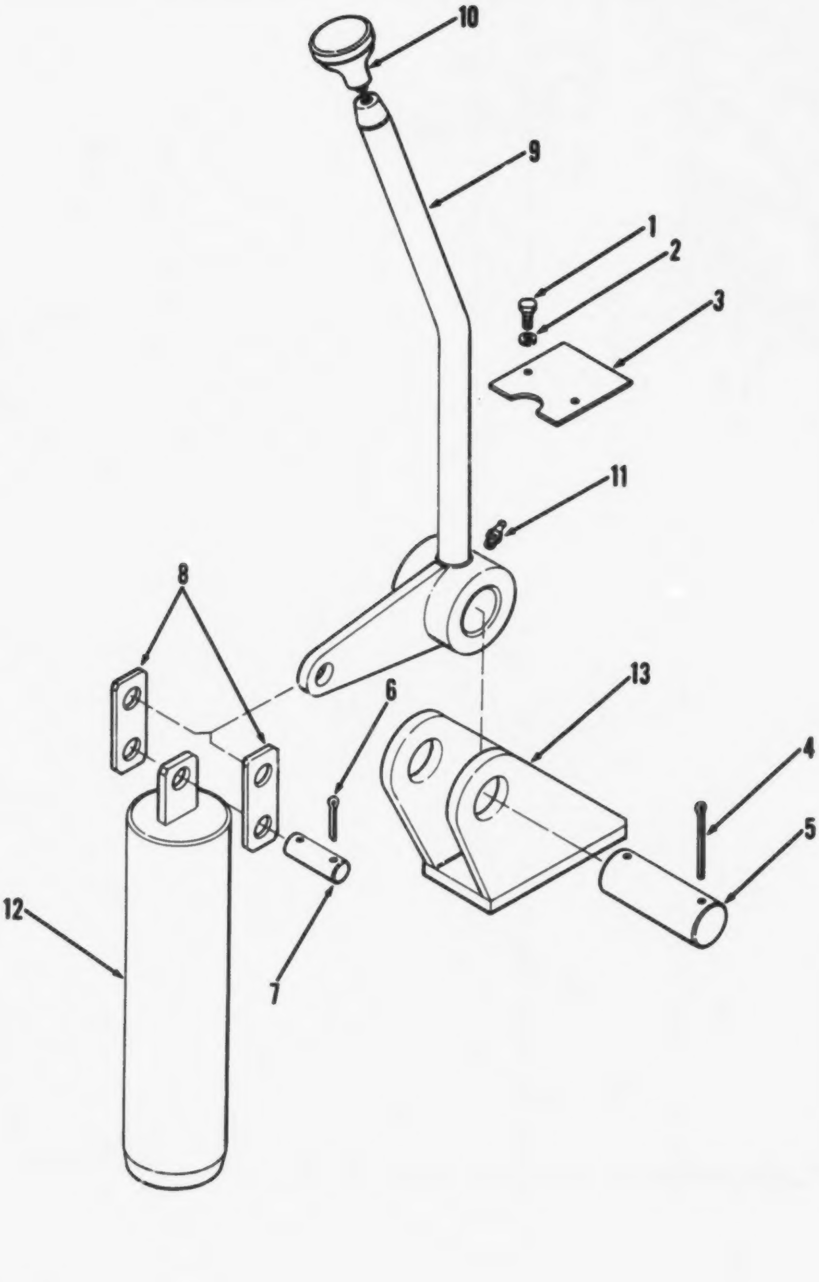

Figure 80. Lock assembly, crane

(1) ILLUSTRATION (a) FIG NO.	(b) ITEM NO.	(2) SMR CODE	(3) NATIONAL STOCK NUMBER	(4) PART NUMBER	(5) FSCM	(6) DESCRIPTION USABLE ON CODE	(7) U/M	(8) QTY INC IN UNIT
						FUNCTIONAL GROUP 35 CRANE LOCK		
80	10	XBOZZ		621	27315	..KNOB,HANDLE CRANE LOCK..................................	EA	1
80	11	XBOZZ		17288	95879	..FITTING,LUBE 3-16 DRIVE LEVER............................	EA	1

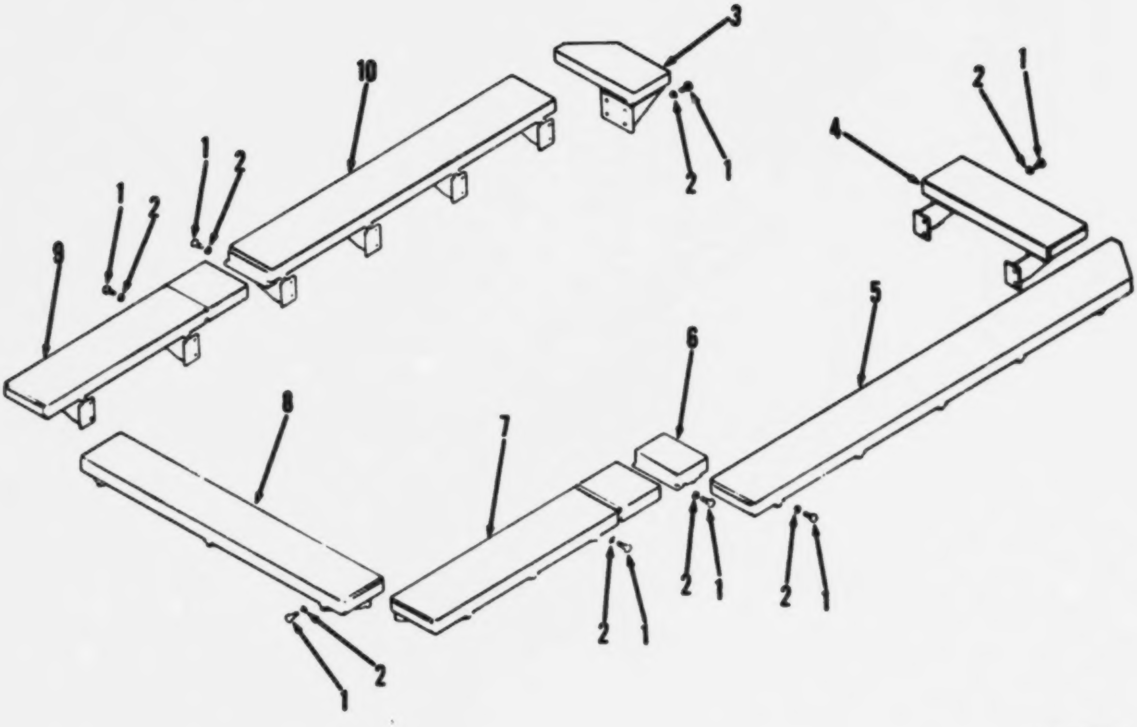

Figure 81. Catwalk assembly, crane

(1) ILLUSTRATION (a) FIG NO.	(b) ITEM NO.	(2) SMR CODE	(3) NATIONAL STOCK NUMBER	(4) PART NUMBER	(5) FSCM	(6) DESCRIPTION USABLE ON CODE	(7) U/M	(8) QTY INC IN UNIT
						FUNCTIONAL GROUP 36 CATWALK ASSEMBLY,CRANE		
81		XBOOO		100J4321-1	27315	CATWALK ASSY CRANE UPPER...................................	EA	1
81	1	XBOZZ	5305-00-782-9495	MS90725-111	96906	.SCREW,CAP,HEXAGON 1-2-13X1-1-4 CATWALK.....................	EA	44
81	2	XBOZZ	5310-00-584-5272	MS35338-48	96906	.WASHER,LOCK 1-2 CATWALK....................................	EA	44
81	3	XDOZZ		11N2137	27315	.SECTION,LH FRT CRANE WALKWAY................................	EA	1
81	4	XDOZZ		11J2606	27315	.SECTION,RH FRT CRANE CATWALK................................	EA	1
81	5	XDOZZ		11J2605	27315	.SECTION,RH S FR CRANE CATWALK...............................	EA	1
81	6	XDOZZ		11N2138	27315	.SECTION,R CENT CRANE CATWALK................................	EA	1
81	7	XDOZZ		11J2604	27315	.SECTION,R LONG CRANE CATWALK................................	EA	1
81	8	XDOZZ		11J2601	27315	.SECTION,REAR CRANE CATWALK..................................	EA	1
81	9	XDOZZ		11J2602	27315	.SECTION,R HINGE CRANE CATWALK...............................	EA	1
81	10	XDOZZ		11J2603	27315	.SECTION,LH FRT CRANE CATWALK................................	EA	1

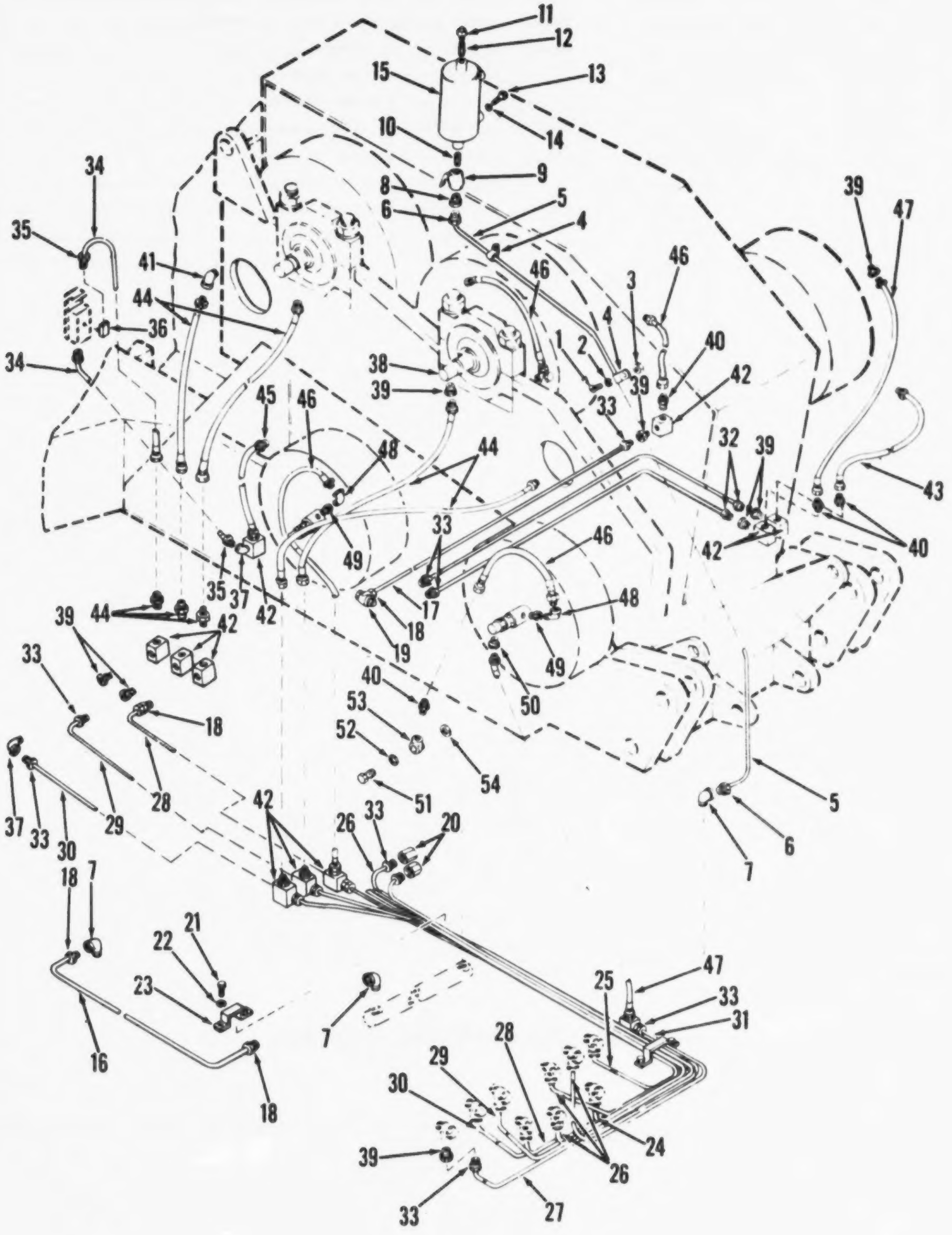

TA032725

Figure 82. Reservoir, swivel joint, tubes and fittings

(1) ILLUSTRATION (a) FIG NO.	(b) ITEM NO.	(2) SMR CODE	(3) NATIONAL STOCK NUMBER	(4) PART NUMBER	(5) FSCM	(6) DESCRIPTION USABLE ON CODE	(7) U/M	(8) QTY INC IN UNIT
						FUNCTIONAL GROUP 37 HYDRAULIC SYSTEM,CRANE		
82	1	XBOZZ	5305-00-082-6721	MS51957-81	96906	SCREW,MACHINE 1-4-20X3-4 CLAMP	EA	4
82	2	XBOZZ	5310-00-582-5965	MS35339-44	96906	WASHER,LOCK 1-4 CLAMP	EA	4
82	3	XBOZZ	5310-00-761-6882	MS51967-2	96906	NUT,PLAIN,HEXAGON 1-4 20 CLAMP	EA	4
82	4	XBOZZ		HTC319	75272	CLAMP,HOSE HOSE	EA	4
82	5	XBOZZ		44P1D97	27315	TUBE,RESERVOIR HYDRAULIC	EA	1
82	6	XBOZZ		105X5	79470	.INVERTED NUT,TUBE TYPE	EA	2
82	7	XBOZZ	4730-00-640-1051	400X5	79470	ELBO,PIPE TO TUBE HYDRAULIC	EA	3
82	8	XBOZZ	4730-00-277-8768	200X5	79470	ADAPTER,STRAIGHT HYDRAULIC SYSTEM	EA	1
82	9	XBOZZ	4820-00-174-0315	682C	79470	COCK,SHUTOFF,SCREW SCREW STEM	EA	1
82	10	XBOZZ		25-21C0J363-2	27315	BUSHING,PIPE RESERVOIR TO SHUTOFF COCK	EA	1
82	11	XDOZZ		300290	70720	VENT,RESERVOIR AIR	EA	1
82	12	XBOZZ		36-2100J363-2	27315	BUSHING,PIPE RESERVOIR	EA	1
82	13	XBOZZ	5305-00-269-2801	MS90726-58	96906	SCREW,CAP,HEXAGON 3/8-24 X 3/4 RESERVOIR	EA	2
82	14	XBOZZ	5310-00-637-9541	MS35338-46	96906	WASHER,LOCK 3/8 RESERVOIR	EA	2
82	15	XBOZZ		227A15	27315	RESERVOIR,HYDRAULIC HYDRAULIC	EA	1
82	16	XBOZZ		44P1D65	27315	TUBE,SWING BRAKE HYDRAULIC	EA	1
82		XBOZZ		105X5	79740	.NUT,INVERTED TUBE	EA	2
82	17	XBOZZ		44P1D30	27315	TUBE,SWING BRAKE HYDRAULIC	EA	1
82	18	PAOZZ	4730-00-013-7398	5284911	19207	.INVERTED NUT,TUBE TUBE	EA	2
82	19	XBOZZ		200X5	79470	.ADAPTER,PIPE TO TUBE	EA	1
82	20	PAOZZ	4730-00-288-8257	300X5	79470	COUPLING,TUBE UNION	EA	3
82	21	PAOZZ	5305-00-082-6721	MS51957-81	96906	SCREW,MACHINE 1/4-20X3/4	EA	4
82	22	PAOZZ	5310-00-582-5965	MS35338-44	96906	WASHER,LOCK CLAMP,MOUNTING	EA	4
82	23	XBOZZ		23217	27315	CLAMP,TUBE TUBE,BUNDLING	EA	2
82	24	XBOZZ		44P1D46	27315	TUBE,CROSSOVER HYDRAULIC	EA	1
82		PAOZZ	4730-00-013-7398	5284911	19207	.INVERTED NUT,TUBE TUBE	EA	2
82	25	PBOZZ	4710-00-405-8844	44P1D67	27315	TUBE ASSEBLY,METAL HYDRAULIC	EA	1
82		PAOZZ	4730-00-013-7398	5284911	19207	.INVERTED NUT,TUBE TUBE	EA	2
82	26	XBOZZ		44P1D72	27315	TUBE,FRONT DRUM HYDRAULIC	EA	3
82		XBOZZ	4730-00-013-7398	5284911	19207	.INVERTED NUT,TUBE TUBE	EA	2
82	27	XBOZZ		44P1D90	27315	TUBE,BOOM HOIST HYDRAULIC	EA	1
82		XBOZZ	4730-00-013-7398	5284911	19207	.INVERTED NUT,TUBE TUBE	EA	2
82	28	XBOZZ		44P1D129	27315	TUBE R CLUTCH HYDRAULIC	EA	1
82		XBOZZ	4730-00-013-7398	105X5	79470	.INVERTED NUT,TUBE TUBE	EA	2
82	29	XBOZZ		44P1D132	27315	TUBE R BRAKE HYDRAILIC	EA	1
82		XBOZZ	4730-00-013-7398	5284911	19207	.INVERTED NUT,TUBE TUBE	EA	2
82	30	XBOZZ		44P1D134	27315	TUBE,HOIST BRK HYDRAULIC	EA	1
82		XBOZZ	4730-00-013-7398	5284911	19207	.INVERTED NUT,TUBE TUBE	EA	2

(1) ILLUSTRATION (a) FIG NO.	(b) ITEM NO.	(2) SMR CODE	(3) NATIONAL STOCK NUMBER	(4) PART NUMBER	(5) FSCM	(6) DESCRIPTION USABLE ON CODE	(7) U/M	(8) QTY INC IN UNIT
82	31	XBOZZ		44P1D36	27315	TUBE,SWG CLUTCH HYDRAULIC..................................	EA	1
82		XBOZZ	4730-00-013-7398	5284911	19207	.INVERTED NUT,TUBE TUBE..................................	EA	3
82	32	XBOZZ		44P1D66	27315	TUBE,CROSSOVER HYDRAULIC..................................	EA	2
82	33	XBOZZ	4730-00-013-7398	5284911	19207	.INVERTED NUT,TUBE TUBE..................................	EA	2
82	34	XBOZZ		44P18301C	27315	TUBE,HOIST BRK HYDRAULIC..................................	EA	2
82	35	XBOZZ	4730-00-013-7397	1C5X4	79470	.INVERTED NUT TUBE C TUBE..................................	EA	2
82	36	PAOZZ	4730-00-253-3006	FC4325	63477	TEE,TUBE TUBE TO CYLINDER..................................	EA	1
82	37	PAOZZ	4730-00-277-8273	8027129	19207	ELBOW,PIPE TO TUBE CONNECTOR..................................	EA	2
82	38	PAOFF	3810-00-435-4508	4030A	93784	SWIVEL JOINT AIR BRAKE..................................	EA	6
82	39	PAOZZ	4730-00-277-8768	200X5	79470	ADAPTER,STRAIGHT	EA	11
82	40	PAOZZ	4730-00-459-8296	C52C5X6X2	79470	ADAPTER,STRAIGHT	EA	11
82	41	PAOZZ	4730-00-406-6989	C54C5X6X2	79470	ELBOW,PIPE TO TUBE	EA	6
82	42	XDOZZ		216T56	27315	FITTING,WELDMENT ADAPTER RECEPTACLE BULKHEAD..................	EA	11
82	43	PCOZZ	4720-00-442-5783	44Z104902	27315	HOSE ASSEMBLY NON AIR BRAKE..................................	EA	1
82	44	PCOZZ	4720-00-442-5781	44Z104903	27315	HOSE ASSEMBLY AIRBRAKE CLUTCH AND BRAKE........................	EA	4
82	45	PCOZZ	4720-00-442-5788	44Z104904	27315	HOSE ASSEMBLY CYLINDER,AIR BRAKE..............................	EA	1
82	46	PCOZZ	4720-00-453-5333	44Z104905	27315	HOSE ASSEMBLY AIR BRAKE..................................	EA	8
82	47	PCOZZ	4720-00-442-5779	44Z104901	27315	HOSE ASSEMBLY AIR HOSE..................................	EA	5
82	48	XDOZZ		C542X6	79470	ELBOW,PIPE TO TEE,S SWIVEL JOINT..............................	EA	7
82	49	XBOZZ	4730-00-811-6205	PF11C-4-2	58660	REDUCER,PIPE SWIVEL JOINT..................................	EA	7
82	50	XBOZZ	4730-00-459-8296	C52C5X6X2	79470	ADAPTER,STRAIGHT SWIVEL..................................	EA	8
82	51	XBOZZ	3655-00-794-1109	FC784C	63477	BOLT,HYDRAULIC TO CONNECTOR..................................	EA	13
82	52	PAOZZ	5310-00-209-1761	FC6C3	63477	WASHER,FLAT CONNECTOR SEAL..................................	EA	13
82	53	XBOZZ	4730-00-359-0431	FC3511	63477	CONNECTOR,MULTIPLE LINE..................................	EA	13
82	54	PAOZZ	5310-00-359-0458	FC1243	63477	WASHER,FLAT CONNECTOR SEAL..................................	EA	13

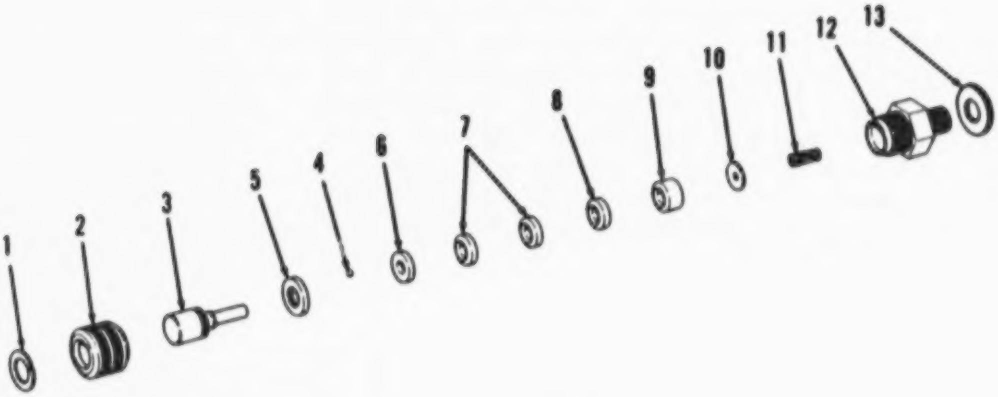

Figure 83. Swivel joint

(1) ILLUSTRATION (a) FIG NO.	(b) ITEM NO.	(2) SMR CODE	(3) NATIONAL STOCK NUMBER	(4) PART NUMBER	(5) FSCM	(6) DESCRIPTION USABLE ON CODE	(7) U/M	(8) QTY INC IN UNIT
						FUNCTIONAL GROUP 37 HYDRAULIC SYSTEM,CRANE		
83		PAOFF	3810-00-435-4508	4030A	93784	SWIVEL JOINT CRANE,TRAVEL	EA	6
83		XAOZZ		4007	93784	.PLUNGER,JOINT	EA	1
83	1	XAOZZ		4012	93784	..RING,LOCK NUT	EA	1
83	2	XAOZZ		4010	93784	..NUT,KNURLED PLUNGER RETAINING	EA	1
83	3	XAOZZ		4009	93784	..PLUNGER,DETENT DETENT	EA	1
83	4	XAOZZ		4011	93784	..BALL BEARING STEEL	EA	6
83	5	XAOZZ		4005	93784	.RING,INNER INNER	EA	1
83	6	XAOZZ		4006	93784	.ADAPTER FEMALE FEMALE	EA	1
83	7	XAOZZ		4005	93784	.GASKET,SEAL SWIVEL BODY SEAL	EA	2
83	8	XAOZZ		4013	93784	.SEPARATOR,GASKET ADAPTER GASKET	EA	1
83	9	XAOZZ		4004	93784	.ADAPTER,MALE BEARING SWIVEL BODY	EA	1
83	10	PAOZZ	5330-00-290-1018	4003	09605	.SEAL,PLAIN ENCASED SPRING SEAT	EA	1
83	11	XAOZZ		3029	93784	.SPRING,HELICAL PLUNGER DRIVEN	EA	1
83	12	XAOZZ		4029	93784	.BODY SWIVEL	EA	6
83	13	XOOZZ		2187163	27315	.WASHER,FLAT	EA	6

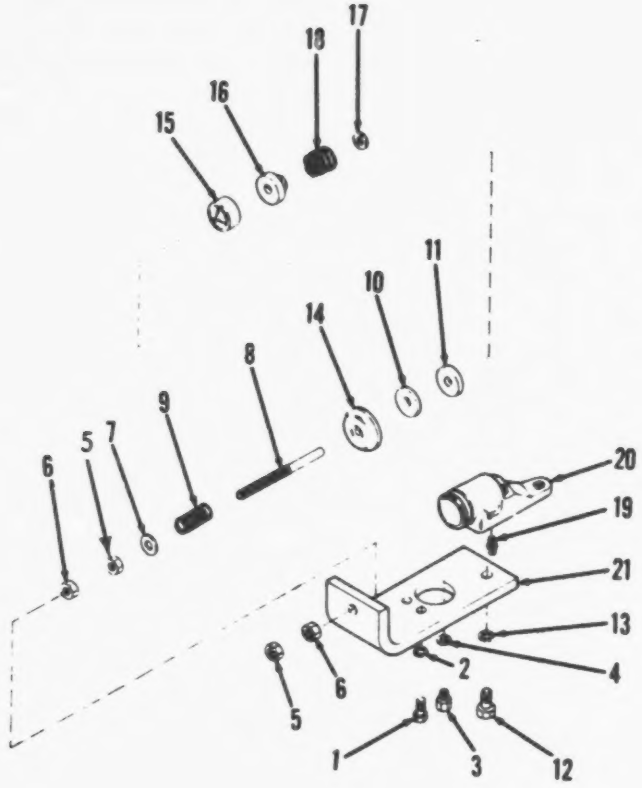

TA032727

Figure 84. Cylinder assembly, hydraulic

(1) ILLUSTRATION (a) FIG NO.	(b) ITEM NO.	(2) SMR CODE	(3) NATIONAL STOCK NUMBER	(4) PART NUMBER	(5) FSCM	(6) DESCRIPTION USABLE ON CODE	(7) U/M	(8) QTY INC IN UNIT
						FUNCTIONAL GROUP 37 HYDRAULIC SYSTEM,CRANE		
84	1	XBOZZ	5306-00-225-8496	MS90725-31	96906	BOLT,MACHINE 5/16-18 X 5/8,CYLINDER MTG.	EA	2
84	2	XBOZZ	5310-00-407-9566	MS35338-45	96906	WASHER,LOCK 5/16 CYLINDER MOUNTING	EA	2
84	3	XBOZZ	4730-00-353-2995	FC2952	63477	ADAPTER,STRAIGHT	EA	1
84	4	PAOZZ	5310-00-359-0458	FC1243	63477	WASHER,FLAT CONNECTOR	EA	1
84	5	PAOZZ	5310-00-991-1711	MS35691-25	96906	NUT,PLAIN,HEXAGON 7/16-14,PUSH ROD MOUNTING	EA	1
84	6	XBOZZ	5310-01-004-9535	MS51967-11	96906	NUT,PLAIN,HEXAGON	EA	3
84	12	XBOZZ	5305-00-710-4190	MS90726-85	96906	SCREW,CAP,HEXAGON	EA	1
84	13	XBOZZ	5310-00-209-0965	MS35338-47	96906	WASHER,LOCK	EA	1
84		PAOFF	3810-00-436-3156	2915N13F4	27315	CYLINDER,HYD	EA	1
84		XAOZZ		38Z209	27315	.CYLINDER ASSY HYD.	EA	1
84	21	XDOZZ		216P249	27315	BRACKET CYL MOUNTING	EA	1

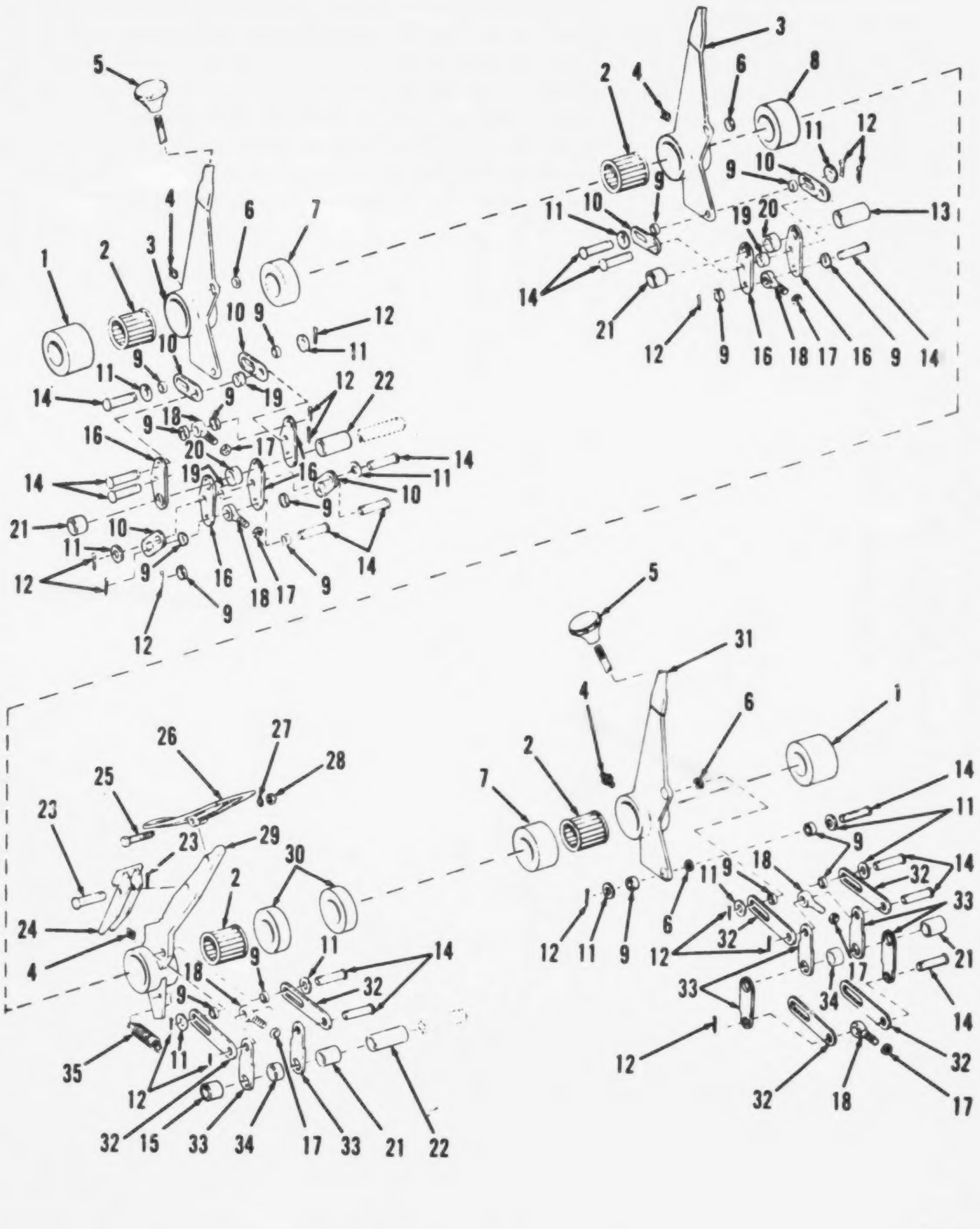

Figure 85. Control assembly

(1) ILLUSTRATION (a) FIG NO.	(b) ITEM NO.	(2) SMR CODE	(3) NATIONAL STOCK NUMBER	(4) PART NUMBER	(5) FSCM	(6) DESCRIPTION USABLE ON CODE	(7) U/M	(8) QTY INC IN UNIT
						FUNCTIONAL GROUP 38 CONTROLS AND LEVERS,		
						CRANE		
85		XDOFF		2100J348F1	27315	CONTROL ASSY CRANE	EA	1
85	1	XDOZZ		218T51303	27315	.SPACER,SHAFT LEVER SHAFT	EA	1
85	2	PAOZZ	3110-00-108-8004	143212	24617	.ROLLER ASSEMBLY LEVER	EA	2
85	3	XDOZZ		206P171F1	27315	.LEVER ASSY HAND	EA	3
85	3	PAOZZ	4730-00-050-4208	MS15003-1	96906	..FITTING,LUBRICATION LUBE 1-8	EA	6
85	5	PAOZZ	5355-00-152-8353	2677G	73793	..KNOB LEVER	EA	1
85	6	PAOZZ	3120-00-425-8186	5T1586	27315	..BEARING,SLEEVE SLEEVE LEVER	EA	6
85	7	XDOZZ		218T51307	27315	.SPACER,SHAFT LEVER SHAFT	EA	2
85	8	XDOZZ		218T51308	27315	.SPACER,LEVER LEVER SHAFT	EA	1
85	9	XDOZZ		218T53	27315	.SPACER,LINKAGE LINKAGE	EA	18
85	10	XDOZZ		206T166	27315	.LINK,TOGGLE TOGGLE	EA	10
85	11	XBOZZ		MS27183-17	96906	..WASHER,FLAT: 1-2 LINK	EA	18
85	12	XBOZZ		MS24665-353	96906	..PIN,COTTER: 1-8 X 1, PIN	EA	25
85	13	XDOZZ		18P933093	27315	.SPACER,SHAFT TOGGLE SHAFT	EA	1
85	14	XBOZZ		34	71177	.PIN,LINKAGE TOGGLE SHAFT	EA	21
85	15	XDOZZ		18P933035	27315	.SPACER,SHAFT TOGGLE SHAFT	EA	1
85	16	XDOZZ		206T202	27315	.LINK IDLER	EA	10
85	17	PAOZZ	5310-00-975-2075	MS35691-21	96906	.NUT,JAM,HEXAGON 3/8-24 JAM	EA	9
85	18	XDOZZ		207266C	27315	.ROD PUSH	EA	9
85	19	XDOZZ		218T511	27315	.SPACER,LINKAGE LINKAGE	EA	2
85	20	XDOZZ		18P933D48	27315	.SPACER,LINKAGE	EA	2
85	21	XDOZZ		18P933043	27319	.SPACER,LINKAGE LINKAGE	EA	3
85	22	XDOZZ		18P933085	27315	.SPACER,SHAFT TOGGLE SHAFT	EA	2
85	23	XDOZZ		34	71177	.PIN,LINKAGE: W/COTTER PIN	EA	2
85	24	XDOZZ		206P62	27315	.ARM,PAWL PAWL	EA	2
85	25	PAOZZ	5305-00-269-2808	MS90726-65	96906	.SCREW,CAP,HEXAGON 3/8-24 X 1-3/4 TREADLE,MOUNTING	EA	2
85	26	XBOZZ		206N26	27315	.TREADLE BRAKE BRAKE	EA	1
85	27	XDOZZ	5310-00-637-9541	MS35338-46	96906	.WASHER,LOCK 3/8 TREADLE MOUNTING	EA	2
85	28	XDOZZ	5310-00-732-0559	MS51968-8	96906	.NUT,PLAIN,HEXAGON 3/8-24 TREADLE MOUNTING	EA	2
85	29	XBOZZ		206N42F1	27315	.LEVER FOOT PEDAL	EA	2
85	30	XDOZZ		218T51306	27315	.SPACER,SHAFT LEVER SHAFT	EA	4
85	31	XDOZZ		206P170F1	27315	.LEVER,CLUTCH SWING CLUTCH	EA	1
85		PAOZZ	4730-00-050-4208	MS15003-1	96906	.FITTING,LUBRICATION 1/8	EA	1
85		PAOZZ	5355-00-152-8353	2677G	73793	..KNOB LEVER	EA	1
85		PAOZZ	3120-00-425-8186	5T1586	27315	..BEARING,SLEEVE LEVER	EA	1
85		PAOZZ	4730-00-050-4208	MS15003-1	96906	..FITTING,LUBRICATION LUBE,1/8	EA	1
85		PAOZZ	3120-00-425-8186	5T1586	27315	..BEARING,SLEEVE FOOT PEDAL LEVER	EA	1

(1) ILLUSTRATION (a) FIG NO.	(b) ITEM NO.	(2) SMR CODE	(3) NATIONAL STOCK NUMBER	(4) PART NUMBER	(5) FSCM	(6) DESCRIPTION USABLE ON CODE	(7) U/M	(8) QTY INC IN UNIT
85	32	XDOZZ		206T92	27315	.LINK,TOGGLE LINK TOGGLE....................................	EA	8
85	33	XDOZZ		206T8	27315	.LINK IDLER..	EA	8
85	34	XDOZZ		18P933D1E	27315	.SPACER,SHAFT TOGGLE SHAFT.................................	EA	6
85	35	PAOZZ	3810-00-718-4367	17H286	27315	.SPRING,BAND TENSION PEDAL RETURN..........................	EA	2

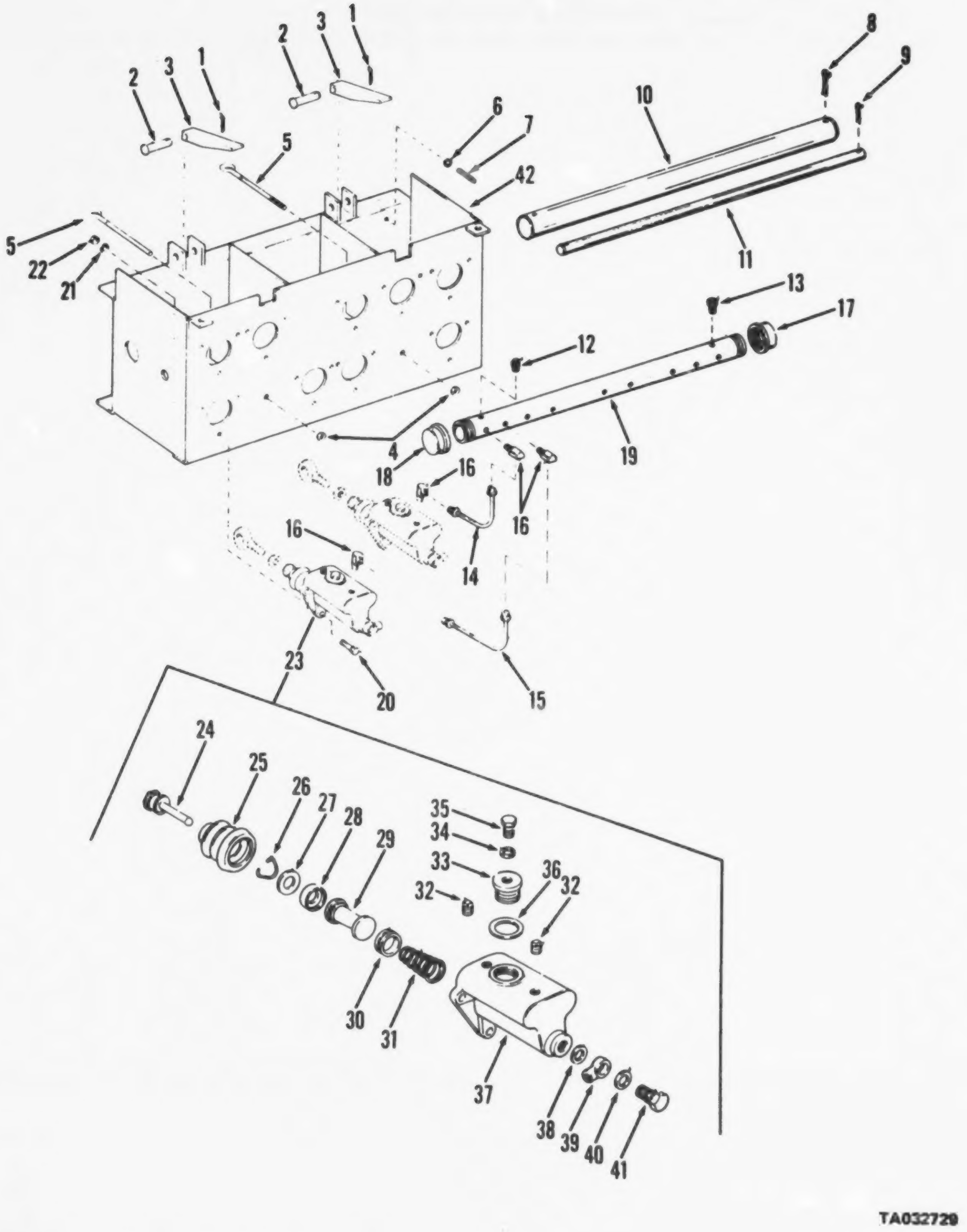

Figure 86. Cylinder assembly, control

(1) ILLUSTRATION (a) FIG NO.	(b) ITEM NO.	(2) SMR CODE	(3) NATIONAL STOCK NUMBER	(4) PART NUMBER	(5) FSCM	(6) DESCRIPTION USABLE ON CODE	(7) U/M	(8) QTY INC IN UNIT
						FUNCTIONAL GROUP 38 CONTROLS AND LEVERS.		
						CRANE		
86	1	PAOZZ	5315-00-835-5822	MS24665-353	96906	PIN,COTTER 1-8X1 PIN	EA	2
86	2	XDOZZ		34	71177	PIN,PAWL PAWL	EA	2
86	3	XDOZZ		21876	27315	PAWL,TREADLE TREADLE	EA	2
86	4	XDOZZ	5310-00-880-7744	MS51967-5	96906	NUT,PLAIN,HEXAGON 5-16-18 EYE BOLT	EA	2
86	5	PAOZZ	5306-00-239-7771	20T2978	27315	BOLT,EYE 3-8-24X5-1-2 3800	EA	2
86	6	XDOZZ	5310-00-655-9544	MS35690-604	96906	NUT,PLAIN,HEXAGON 3-8-16 SETSCREW JAM	EA	2
86	7	XDOZZ	5305-00-054-9277	MS51955-44	96906	SETSCREW,STOP LEVER ADJUSTING	EA	2
86	8	XDOZZ	5315-00-187-9588	MS24665-686	96906	PIN COTTER 5-16X2-1-4 SHAFT	EA	2
86	9	XDOZZ	5315-00-018-7988	MS24665-453	96906	PIN,COTTER 3/16X1-1/4 SHAFT	EA	2
86	10	XDOZZ		210T47	27315	SHAFT,LEVER LEVER	EA	2
86	11	XDOZZ		210T46	27315	SHAFT,TOGGLE TOGGLE	EA	1
86	12	XDOZZ		705	79470	VENT,AIR AIR 1/8 NPT	EA	1
86	13	XBOZZ	4730-00-277-8768	2COX5	79470	ADAPTER,STRAIGHT 1/8 NPT X5/16	EA	1
86	14	MFOZZ		220T25	27315	TUBE ASSEMBLY MANIFOLD SHORT	EA	5
86	15	MFOZZ		220T30	27315	.TUBE ASSY MANIFOLD LONG	EA	4
86	16	PAOZZ	4730-00-640-1051	4COX5	79470	..ELBO,PIPE TO TUBE	EA	18
86	17	XBOZZ		2403V006	27315	CAP,PIPE 1 IN AIR MANIFOLD	EA	1
86	18	XBOZZ		24471	27315	CAP,PIPE 1 IN TAPPED 1/8-27 NPT	EA	1
86	19	XDOZZ		220P177	27315	MANIFOLD CONTROL STAND	EA	1
86	20	XDOZZ	5305-00-269-2805	MS90726-62	96906	SCREW,CAP,HEXAGON 3/8-24X1-1/4 CYLINDER MOUNTING	EA	27
86	21	XDOZZ	5310-00-637-9541	MS35338-46	96906	WASHER,LOCK	EA	27
86	22	XDOZZ	5310-00-732-0559	MS51968-8	96906	NUT,PLAIN,HEXAGON 3/8-24 CYLINDER MOUNTING	EA	27
86	23	PAOZZ	2530-00-436-3159	2915N20F1	27315	CYLINDER,HYDRAULIC CRANE CONTROL	EA	9
86	24	XDOZZ	2530-00-355-0775	FC5918K	63477	.LINK CONNECT CONNECT CYLINDER	EA	9
86	25	PAOZZ	2530-00-359-0231	FC5921J	63477	.BOOT,SEAL CYLINDER	EA	9
86	26	XAOZZ		FC5917B	63477	.RETAINER,CUP PISTON	EA	9
86	27	XAOZZ		FC5916C	63477	.WASHER PISTON	EA	9
86	28	XAOZZ		FD48703	63477	.CUP,PISTON PISTON	EA	9
86	29	XAOZZ		39256	27315	.PISTON ASSY HYDRAULIC	EA	9
86	30	XAOZZ		FC4873A	63477	.CUP CYLINDER CYLINDER	EA	9
86	31	XAOZZ		FC550B	63477	.SPRING HCPS PISTON RETURN	EA	9
86	32	XBOZZ	4730-00-018-9566	2423V001	27315	.PLUG,PIPE 1/8 SQUARE HEAD	EA	18
86	33	XBOZZ		FC11126B	63477	.CAP,FILLER FILLER	EA	9
86	34	PAOZZ	5310-00-248-5446	X345	33323	.WASHER,FLAT CAP VENT SCREW	EA	9
86	35	PAOZZ	5305-00-470-9703	17-2915N20F1	27315	.SCREW CAP HEXAGON CAP VENT	EA	9
86	36	PAOZZ	5365-00-427-2834	23260	27315	.SPACER,RING FILLER CAP	EA	9

(1) ILLUSTRATION (a) FIG NO.	(b) ITEM NO.	(2) SMR CODE	(3) NATIONAL STOCK NUMBER	(4) PART NUMBER	(5) FSCM	(6) DESCRIPTION USABLE ON CODE	(7) U/M	(8) QTY INC IN UNIT
86	37	XAOZZ		FD6517C	63477	.HOUSING CYLINDER CYLINDER	EA	9
86	38	PAOZZ	5310-00-275-6635	5214539	19207	.WASHER,FLAT COPPER	EA	9
86	39	XBOZZ		FC3163G	63477	.FITTING BANJO CYLINDER	EA	9
86	40	PAOZZ	5310-00-209-1761	759390	24617	.WASHER,FLAT COPPER	EA	9
86	41	PAOZZ	5306-00-492-0340	FC673P	63477	.BOLT,SPECIAL HYDRAULIC	EA	9
86	42	XDOZZ		216J19	27315	.BRACKET COMPENSATOR	EA	1

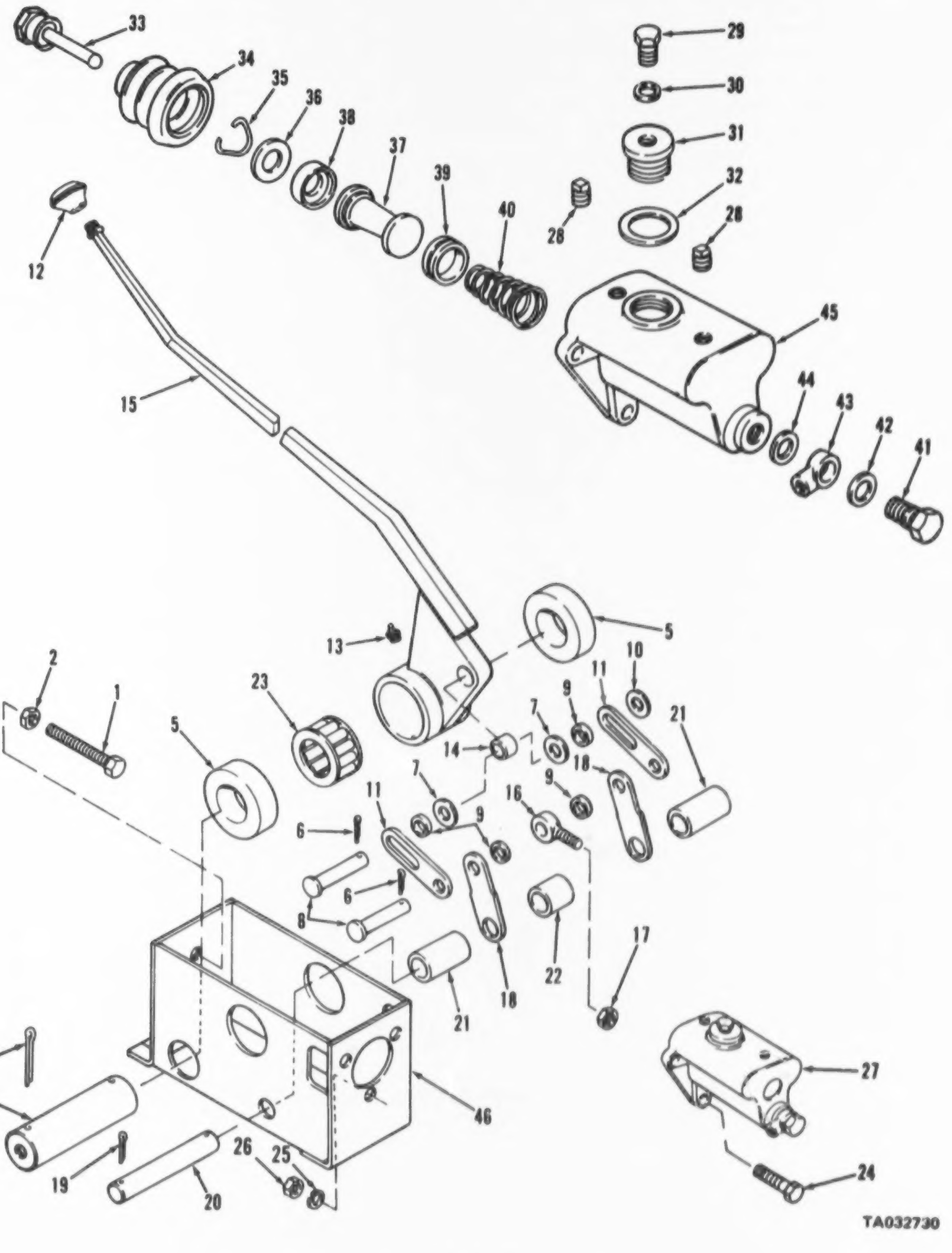

Figure 87. Stand assembly, swing brake control

(1) ILLUSTRATION (a) FIG NO.	(b) ITEM NO.	(2) SMR CODE	(3) NATIONAL STOCK NUMBER	(4) PART NUMBER	(5) FSCM	(6) DESCRIPTION USABLE ON CODE	(7) U/M	(8) QTY INC IN UNIT
						FUNCTIONAL GROUP 39 CONTROLS AND LEVERS, CRANE		
87		XBOZZ		210CN173F2	27315	SWING BRAKE CONTROL CRANE	EA	1
87	1	XDOZZ	5305-00-054-9277	MS51955-46	96906	.SETSCREW,SQUARE 3/8-16 X 2-1/2 SQUARE	EA	1
87	2	XDOZZ	5310-00-732-0558	MS51967-8	96906	.NUT,PLAIN,HEXAGON 3/8-16	EA	1
87	3	XDOZZ	5315-00-187-9588	MS24665-686	96906	.PIN,COTTER 5/16 X 2 1/2 LEVER	EA	2
87	4	XDOZZ		210T44	27315	.SHAFT,LEVER LEVER	EA	1
87	5	XDOZZ		218T51302	27315	.SPACER,LEVER LEVER SHAFT	EA	2
87	6	XDOZZ	5315-00-815-5821	MS24665-351	96906	.PIN,COTTER 1/8 X 1,STRAIGHT PIN	EA	2
87	7	XDOZZ	5310-00-805-5997	MS27183-17	96906	.WASHER,FLAT 1/2 STRAIGHT PIN	EA	2
87	8	XDOZZ		15715008	27315	.PIN,STRAIGHT LINK MOUNTING	EA	2
87	9	XDOZZ		218T53	27315	.SPACER LINK MOUNTING	EA	4
87	10	XDOZZ		3612V006	27315	.WASHER,FLAT 1/2 HEAVY	EA	2
87	11	XDOZZ		206T6	27315	.LINK BRAKE ACTUATING	EA	2
87		XDOZZ		206P173F1	27315	.LEVER ASSY BRAKE	EA	1
87	12	XDOZZ	5355-00-152-8353	26776	73793	..KNOB LEVER	EA	1
87	13	PAOZZ	4730-00-050-4208	MS15003-1	96906	..FITTING,LUBRICATION 1-8 NPT	EA	1
87	14	PAOZZ	3120-00-425-8184	571586	27315	..BEARING,SLEEVE LEVER ASSEMBLY	EA	1
87	15	XDOZZ		1-206P173	27315	..LEVER,BRAKE BRAKE ACTUATING	EA	1
87	16	XDOZZ		2C7660	27315	.ROD,PUSH CYLINDER	EA	1
87	17	XDOZZ	5310-00-575-2075	MS35691-21	96906	.NUT,PLAIN,HEXAGON 3-8-24 JAM	EA	1
87	18	XDOZZ		2C678	27315	.LINK,CONNECT BRAKE	EA	2
87	19	XDOZZ	5315-00-218-7588	MS24665-493	96906	.PIN,COTTER 3-16X1-1-4 PIN MOUNTING	EA	2
87	20	XDOZZ		19F56017	27315	.PIN,LINKAGE LINKAGE MOUNTING	EA	2
87	21	XDOZZ		18P933030	27315	.SPACER,LINKAGE LINKAGE	EA	2
87	22	XDOZZ		18P933034	27315	.SPACER LINKAGE LINKAGE	EA	1
87	23	PAOZZ	3110-00-108-8004	143212	24617	.ROLLER ASSEMBLY LEVER	EA	1
87	24	XDOZZ	5305-00-265-2805	MS90726-62	96906	.SCREW,CAP,HEXAGON 3-8-24X1-1-4 CYLINDER	EA	3
87	25	XDOZZ	5310-00-637-9541	MS35338-46	96906	.WASHER,LOCK 3-8 CYLINDER ASSEMBLY	EA	3
87	26	XDOZZ	5310-00-732-0555	MS51968-8	96906	.NUT,PLAIN,HEXAGON 3-8-24 CYLINDER	EA	3
87	27	PAOZZ	2530-00-436-3159	2915N20F1	27315	.CYLINDER,HYDRAULIC SWING BRAKE	EA	1
87	28	XBOZZ	4730-00-018-9566	2423V001	27315	..PLUG,PIPE 1-8 NPT CYLINDER	EA	2
87	29	PAOZZ	5305-00-670-9703	17-2915N20F1	27315	..SCREW,HEXAGON HEAD CAP	EA	1
87	30	PAOZZ	5310-00-265-5446	X345	33323	..WASHER,FLAT TOP FILLER CAP	EA	1
87	31	XDOZZ		FC111268	63477	..CAP,FILLER CYLINDER BODY	EA	1
87	32	PAOZZ	5365-00-427-2834	20760	27315	..SPACER,RING CAP	EA	1
87	33	XDOZZ	2530-00-359-0775	FC5518K	63477	..LINK,CONNECTING PISTON	EA	1
87	34	PCOZZ	2530-00-359-0241	FC5521J	63477	..BELLOWS,RUBBER PISTON ASSEMBLY	EA	1
87	35	XDOZZ		FC5517B	63477	..RETAINER,BOOT PISTON	EA	1
87	36	XAOZZ		FC5516C	63477	..WASHER,PISTON PISTON	EA	1

(1) ILLUSTRATION (A) FIG NO.	(B) ITEM NO.	(2) SMR CODE	(3) NATIONAL STOCK NUMBER	(4) PART NUMBER	(5) FSCM	(6) DESCRIPTION USABLE ON CODE	(7) U/M	(8) QTY INC IN UNIT
87	37	XADZZ		79256	27315	..PISTON ASSEMBLY CYLINDER	EA	1
87	38	XACZZ		FD48703	63477	...CUP,PISTON PISTON	EA	1
87	39	XADZZ		FD48702A	63477	..CUP,CYLINDER CYLINDER	EA	1
87	40	XDDZZ		FC5908	63477	..SPRING,PISTON RETURN	EA	1
87	41	PADZZ	5306-00-492-0340	FC673P	63477	..BOLT,SPECIAL FITTING	EA	1
87	42	PADZZ	5310-00-209-1761	759290	24617	..WASHER,FLAT HYDRAULIC FITTING	EA	1
87	43	XBDZZ		FC91636	63477	..FITTING,HYDRAULIC HYDRAULIC	EA	1
87	44	PADZZ	5310-00-275-6635	5214535	19207	..WASHER,FLAT COPPER HYDRAULIC	EA	1
87	45	XADZZ		FD6917C	63477	..HOUSING,CYLINDER BRAKE CONTROL	EA	1
87	46	XDDZZ		214P912	27315	.BRACKET,CYLINDER MOUNTING	EA	1

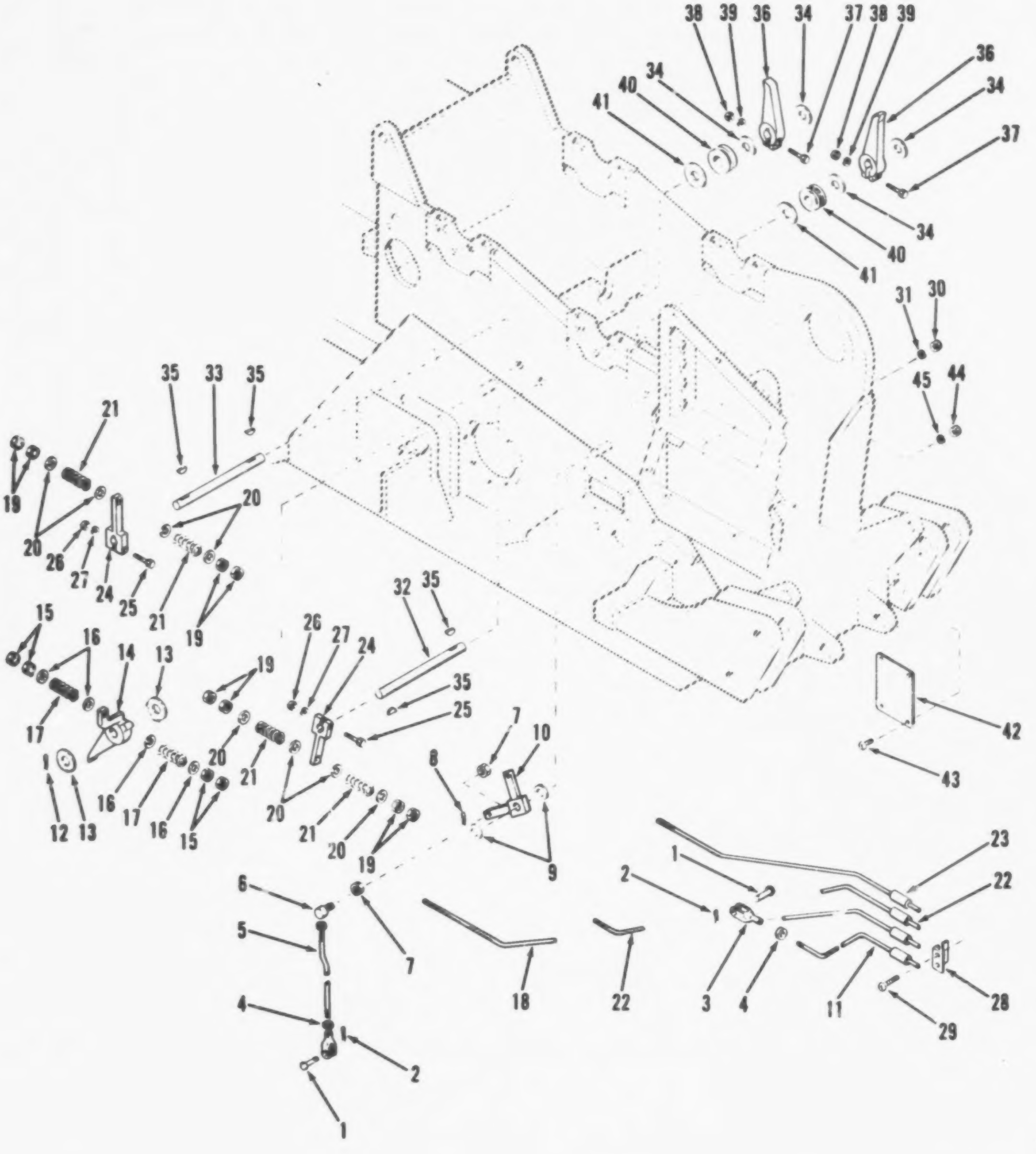

Figure 88. Lock assembly, drum and pawl

(1) ILLUSTRATION (a) FIG NO.	(b) ITEM NO.	(2) SMR CODE	(3) NATIONAL STOCK NUMBER	(4) PART NUMBER	(5) FSCM	(6) DESCRIPTION USABLE ON CODE	(7) U/M	(8) QTY INC IN UNIT
						FUNCTIONAL GROUP 38 CONTROLS AND LEVERS.		
						CRANE		
88		XBOOO		2915J72-2	27315	PAWL LOCK ASSEMBLY SWING LOCK	EA	1
88		XDOZZ		36	71177	.PIN ASSEMBLY LOCK CONTROL ROD	EA	2
88	1	XDOZZ		19T3650	27315	..PIN,ROD END ROD END	EA	1
88	2	XDOZZ	5315-00-835-5822	MS24665-353	96906	..PIN,COTTER PIN ASSEMBLY	EA	1
88	3	XDOZZ			71177	.YOKE ROD END	EA	2
88	4	XDOZZ	5310-00-834-8736	MS35651-37	96906	.NUT,PLAIN,HEXAGON 1/2-20 YOKE MOUNTING	EA	2
88	5	XDOZZ		220T41501	27315	.ROD,CONTROL SWING LOCK	EA	1
88	6	PAOZZ	3040-00-374-8850	C111	49267	.BALL JOINT LEVER	EA	1
88	7	XDOZZ	5310-00-834-8736	MS35651-37	96906	.NUT,PLAIN,HEXAGON 1/2-20 ROD	EA	3
88	8	XDOZZ	5315-00-297-2444	MS24665-623	96906	.PIN,COTTER 1/4X1-1/2	EA	1
88	9	XDOZZ	5310-00-809-8541	MS27183-27	96906	.WASHER,FLAT 1-1/16 LEVER	EA	2
88	10	XDOZZ		206P198	27315	.LEVER,SWG LOCK SWING LOCK	EA	1
88	11	XDOZZ		220P185	27315	.ROD CONTROL SWING LOCK	EA	1
88	12	XDOZZ	5315-00-297-2444	MS24665-623	96906	.PIN,COTTER 1/4X1-1/2 PAWL MOUNTING	EA	1
88	13	XDOZZ	5310-00-809-8541	MS27183-27	96906	.WASHER,FLAT 1-1/6 PAWL MOUNTING	EA	1
88	14	XDOZZ		206A45	27315	.PAWL,DRUM DRUM	EA	1
88	15	XDOZZ	5310-00-834-8736	MS35691-37	96906	.NUT,PLAIN HEXAGON 1/2-20 ROD MOUNTING	EA	4
88	16	XDOZZ	5310-00-809-5997	MS27183-17	96906	.WASHER,FLAT 1/2 ROD MOUNTING	EA	4
88	17	XBOZZ		17M274	27315	.SPRING,ROD MTG ROD MOUNTING	EA	2
88	18	XDOZZ		220P198	27315	.ROD,CONTROL BOOM HOIST PAWL	EA	1
88	19	XDOZZ	5310-00-834-8736	MS35651-37	96906	.NUT,PLAIN HEXAGON 1/2-20 ROD MOUNTING	EA	8
88	20	XDOZZ	5310-00-809-5997	MS27183-17	96906	.WASHER,FLAT ROD MOUNTING	EA	8
88	21	XBOZZ		17M274	27315	.SPRING,ROD MTG ROD MOUNTING	EA	4
88	22	XDOZZ		220P187	27315	.ROD,CONTROL FFT DRUM PAWL	EA	1
88	23	XDOZZ		220P186	27315	.ROD CONTROL,RRK DRUM PAWL	EA	1
88	24	XDOZZ		206T193	27315	.LEVER,DRUM PAWL DRUM PAWL	EA	2
88	25	XDOZZ	5305-00-071-1772	MS90725-119	96906	.SCREW,CAP,HEXAGON 1/2-13X3	EA	2
88	26	XDOZZ	5310-00-768-0318	MS51967-14	96906	.NUT,PLAIN HEXAGON 1/2-13 LEVER	EA	2
88	27	XDOZZ	5310-00-584-5272	MS35338-48	96906	.WASHER,LOCK 1/2 LEVER MOUNTING	EA	2
88	28	XDOZZ		206T201	27315	.GUIDE,LEVER LEVER	EA	3
88	29	XBOZZ		MS35206-264	96906	..SCREW,MACHINE: 10-24 X 5-8,LEVER	EA	6
88	30	XDOZZ		MS35649-252	96906	.NUT,PLAIN,HEXAGON 10-24 LEVER	EA	6
88	31	XDOZZ	5310-00-045-3296	MS35338-43	96906	.WASHER,LOCK TO LEVER GUIDE	EA	6
88	32	XDOZZ		210T4801	27315	.SHAFT,PAWL PAWL	EA	1
88	33	XDOZZ		210T4802	27315	.SHAFT,PAWL PAWL	EA	1
88	34	XDOZZ	5310-00-809-8541	MS27183-27	96906	.WASHER,FLAT PAWL MOUNTING	EA	4
88	35	XDOZZ	5315-00-616-5520	MS35756-14	96906	.KEY,WOODRUFF PAWL SHAFT	EA	4

(1) ILLUSTRATION (a) FIG NO.	(b) ITEM NO.	(2) SMR CODE	(3) NATIONAL STOCK NUMBER	(4) PART NUMBER	(5) FSCM	(6) DESCRIPTION USABLE ON CODE	(7) U/M	(8) QTY INC IN UNIT
88	36	XDOZZ		206P176	27315	.PAWL,DRUM DRUM	EA	2
88	37	XDOZZ	5305-00-071-1772	MS90725-119	96906	.SCREW,CAP,HEXAGON 1/2-13 X 3,PAWL	EA	2
88	38	XDOZZ	5310-00-768-0318	MS51967-14	96906	.NUT,PLAIN,HEXAGON 1/2-13,PAWL MOUNTING	EA	2
88	39	XDOZZ	5310-00-584-5272	MS35338-48	96906	.WASHER,LOCK 1/2 PAWL MOUNTING	EA	2
88	40	PCOZZ	5325-00-276-6343	MS35489-23	96906	.GROMMET,RUBBER PAWL SHAFT,PKG OF 50	EA	2
88	41	XDOZZ		214T44	27315	.CAP,WELD WELD	EA	2
88	42	XBOZZ		32U586	27315	.PLATE,INSTRUCTION INSTRUCTIONS	EA	1
88	43	XDOZZ	5305-00-984-6191	MS35206-243	96906	.SCREW,MACHINE 8-32X3/8 PLATE MOUNTING	EA	4
88	44	XDOZZ	5310-00-934-9757	MS35649-282	96906	.NUT,PLAIN,HEXAGON 8-32 PLATE MOUNTING	EA	4
88	45	XDOZZ	5310-00-045-3299	MS35338-42	96906	.WASHER,LOCK 8 PLATE MOUNTING	EA	4

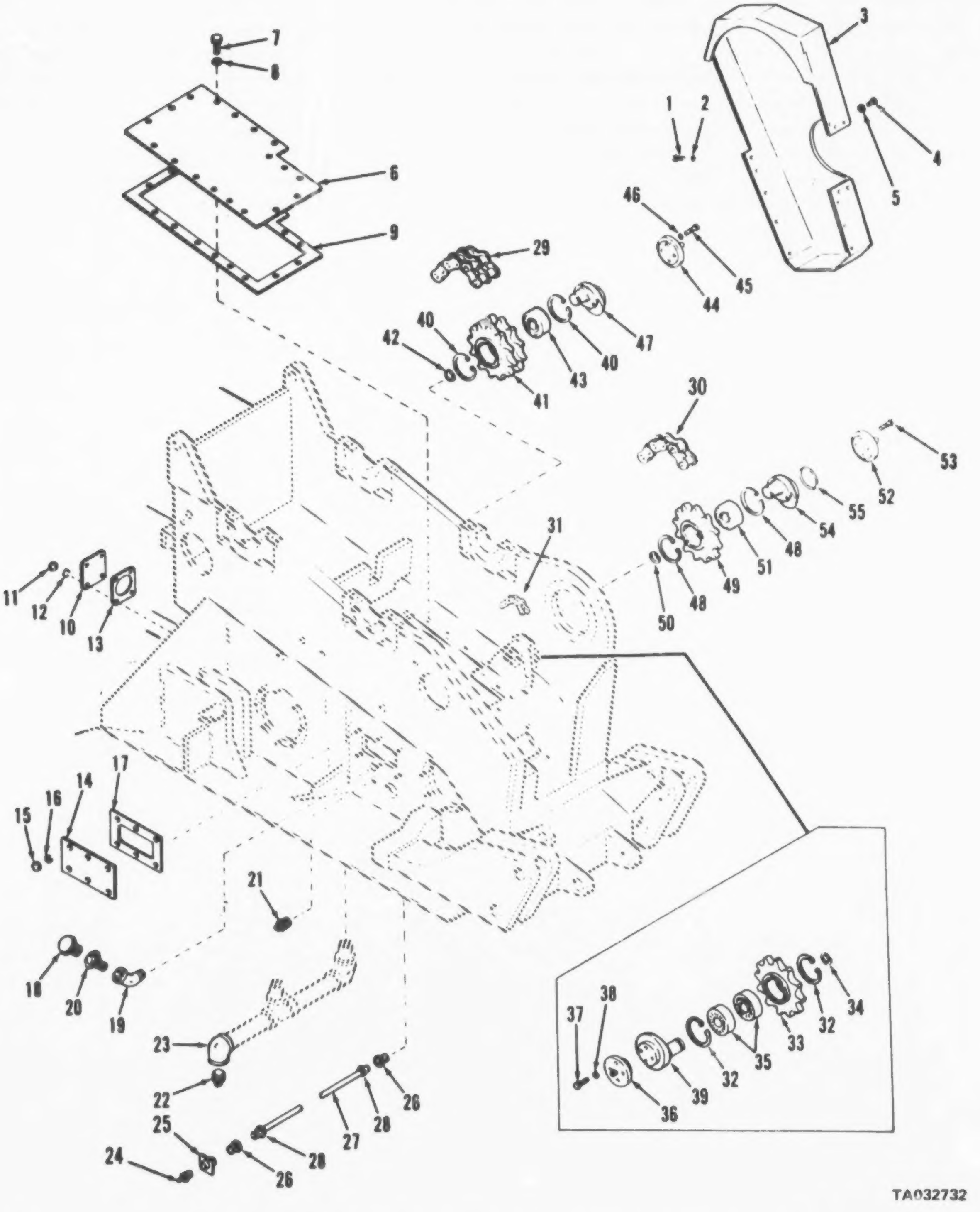

Figure 89. Shaft assemblies, chains and chain housing

(1) ILLUSTRATION (a) FIG NO.	(b) ITEM NO.	(2) SMR CODE	(3) NATIONAL STOCK NUMBER	(4) PART NUMBER	(5) FSCM	(6) DESCRIPTION USABLE ON CODE	(7) U/M	(8) QTY INC IN UNIT
						FUNCTIONAL GROUP 39 GEAR AND CHAIN HOUSING		
						CRANE		
89	4	XBOZZ		AJ6-45	72794	..STUD TURNLOCK CHAIN HSG	EA	3
89	5	XDOZZ	5325-00-435-2168	GP6	72794	..GROMMET,RUBBER FASTNER	EA	3
89	6	XBOZZ		214P54	27315	.COVER GEAR HSG COVER GEAR	EA	1
89	7	XDOZZ	5305-00-269-3209	MS90725-58	96906	.SCREW,CAP,HEXAGON 3/8-16X3/4 COVER	EA	18
89	8	XDOZZ	5310-00-637-9541	MS35338-46	96906	.WASHER,LOCK 3/8 COVER	EA	18
89	9	PAOZZ	5330-00-443-1965	220P178	27315	.GASKET COVER COVER GEAR	EA	1
89	10	XBOZZ		214T39	27315	.PLATE REAR	EA	1
89	11	XDOZZ	5310-00-732-0558	MS51967-8	96906	.NUT,PLAIN,HEXAGON 3/8-16 PLATE	EA	4
89	12	XDOZZ	5310-00-637-9541	MS35338-46	96906	.WASHER,LOCK 3/8 PLATE	EA	4
89	13	PAOZZ	5330-00-235-5714	32CT55	27315	.GASKET PLATE	EA	1
89	14	XBOZZ		216T112	27315	.COVER SIDE HSG	EA	2
89	15	XDOZZ	5310-00-732-0558	MS51967-8	96906	.NUT,PLAIN,HEXAGON 3/8-16 SIDE COVER	EA	12
89	16	XDOZZ	5310-00-637-9541	MS35338-46	96906	.WASHER,LOCK 3/8 SIDE COVER	EA	12
89	17	PAOZZ	5330-01-023-5294	20T133	27315	.GASKET SIDE CV	EA	2
89	18	XBOZZ	2520-00-395-7722	A14132	00736	.BREATHER HSG	EA	1
89	19	PAOZZ	4730-00-246-9189	119096	24617	.ELBOW PIPE BREATHER	EA	1
89	20	PAOZZ	4730-00-405-7265	24C1VC38	27315	.BUSHING PIPE BREATHER	EA	1
89	21	XBOZZ	4730-00-221-2140	MS20913-6S	96906	.PLUG,PIPE CHAIN HSG	EA	1
89	22	XDOZZ	4730-00-203-0549	MS49005-16	96906	.PLUG,PIPE 1-1/4 NPT SQUARE RECESS DRAIN	EA	1
89	23	XDOZZ	4730-00-116-9323	2416VC23	27315	.ELBOW PIPE 1 1/4 NPT 90 DEG STREET	EA	1
89	24	PAOZZ	4730-00-050-4208	MS15003-1	96906	.FITTING,LUBRICATION 1/8 NPT	EA	1
89	25	XBOZZ		216T30	27315	.BRACKET TUBE LUBRICATING TUBE ASSEMBLY	EA	1
89	26	PAOZZ	4730-00-540-2612	730178	64104	.ADAPTER,STRAIGHT LUBRICATING	EA	1
89	27	XBOZZ		44P183D14	27315	.TUBE ASSEMBLY LUBRICATING	EA	1
89	28	PAOZZ	4730-00-013-7397	105X4	79470	..INVERTED NUT	EA	2

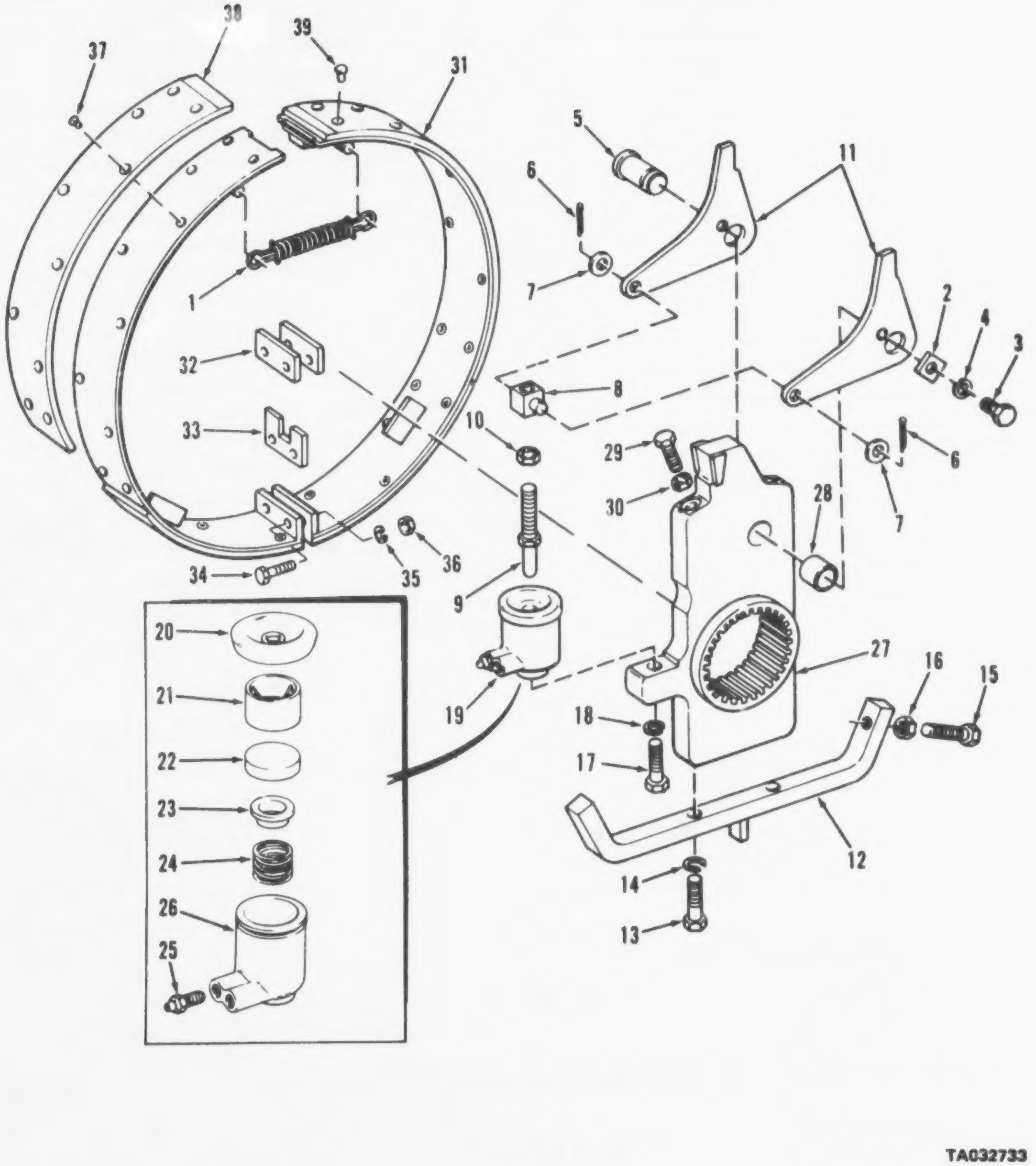

Figure 90. Clutch assembly, hoist

(1) ILLUSTRATION (a) FIG NO.	(b) ITEM NO.	(2) SMR CODE	(3) NATIONAL STOCK NUMBER	(4) PART NUMBER	(5) FSCM	(6) DESCRIPTION USABLE ON CODE	(7) U/M	(8) QTY INC IN UNIT
						FUNCTIONAL GROUP 40 CLUTCHES,SHAFTS AND BRAKE ASSEMBLIES,CRANE		
90	5	XDOZZ		2197120	27315	.PIN LEVER MTG LEVER MTG	EA	1
90	6	XDOZZ	5315-00-187-9550	MS24665-419	96906	.PIN,COTTER 5/32X1 LINK	EA	2
90	7	XDOZZ	5310-00-805-5997	MS27183-17	96906	.WASHER,FLAT 1/2 LINK MTG	EA	2
90	8	XDOZZ	3815-00-462-4693	2187217	27315	.LINK LEVER CONNECTING	EA	1
90	9	XDOZZ	2530-00-485-0998	2207156	27315	.ROD PUSH PUSH	EA	1
90	10	XDOZZ	5310-00-834-8734	MS35691-37	96906	.NUT,PLAIN,HEXAGON 1/2-20 PUSH ROD	EA	1
90	11	XDOZZ	2530-01-029-3225	206T77C1	27315	.LEVER HOIST HOIST CLUTCH	EA	2
90	12	XDOZZ	2590-01-029-8659	214P64	27315	.BRACKET ASSY SPIDER ASSY	EA	1
90	13	XDOZZ	5305-00-725-4183	MS90726-113	96906	.SCREW,CAP,HEXAGON 1/2-20X1-1/2 SPIDER	EA	2
90	14	XDOZZ	5310-00-584-5272	MS35338-48	96906	.WASHER,LOCK 1/2 SPIDER ASSEMBLY	EA	2
90	15	XDOZZ	5305-00-725-4183	MS90726-113	96906	.SCREW,CAP,HEXAGON 1/2-20X1-1/2 BRACKET...UNTING	EA	2
90	16	XDOZZ	5310-00-834-8734	MS35691-37	96906	.NUT,PLAIN,HEXAGON 1/2-20 BRACKET MOUNTING	EA	2
90	17	XDOZZ	5305-00-725-4187	MS90726-114	96906	.SCREW,CAP,HEXAGON 1/2-20X1-3/4 CYLINDER	EA	1
90	18	XDOZZ	5310-00-584-5272	MS35338-48	96906	.WASHER,LOCK 1/2 CYLINDER ASSEMBLY	EA	1
90	19	PAOFF	3810-00-436-3157	382208	27315	.CYLINDER ASSEMBLY HYDRAULIC	EA	1
90	20	PCOZZ	2530-00-521-4981	FC967A	63477	..BOOT,DUST AND HYDRAULIC CYLINDER	EA	1
90	21	XAOZZ		FC975E	63477	..PISTON HYDRAULIC HYDRAULIC	EA	1
90	22	XAOZZ		FC48736	63477	..CUP CYLINDER HYDRAULIC	EA	1
90	23	XAOZZ		FC18784	63477	..CUP,EXPANDER HYDRAULIC	EA	1
90	24	XAOZZ		FC31720	63477	..SPRING PISTON RETURN	EA	1
90	25	XBOZZ	2530-00-287-8252	FC11410	63477	..VALVE BLEEDER BLEEDER	EA	1
90	26	XAOZZ		FE22565	63477	..BODY CYLINDER CYLINDER	EA	1
90	31	XBOZZ		215N131F1	27315	.BAND ASSEMBLY HOIST CLUTCH	EA	1
90	32	XDOZZ		18T47C002C	27315	..SPACER CLUTCH BAND	EA	2
90	33	XDOZZ		218T588	27315	..SPACER CLUTCH BAND	EA	1
90	34	XDOZZ	5305-00-071-1770	MS90725-116	96906	..SCREW,CAP,HEXAGON 1/2-13X2-1/4	EA	2
90	35	XDOZZ	5310-00-584-5272	MS35338-48	96906	..WASHER,LOCK 1/2 CLUTCH BAND	EA	2
90	36	XDOZZ	5310-00-768-0318	MS51967-14	96906	..NUT,PLAIN,HEXAGON 1/2-13 CLUTCH BAND	EA	2

AMC FORM 1779, 1 OCT 73 (REPLACES AMC TEST FORMS 1733 AND 1734, 6 APR 70, WHICH WILL BE USED UNTIL 1 JUL 74)

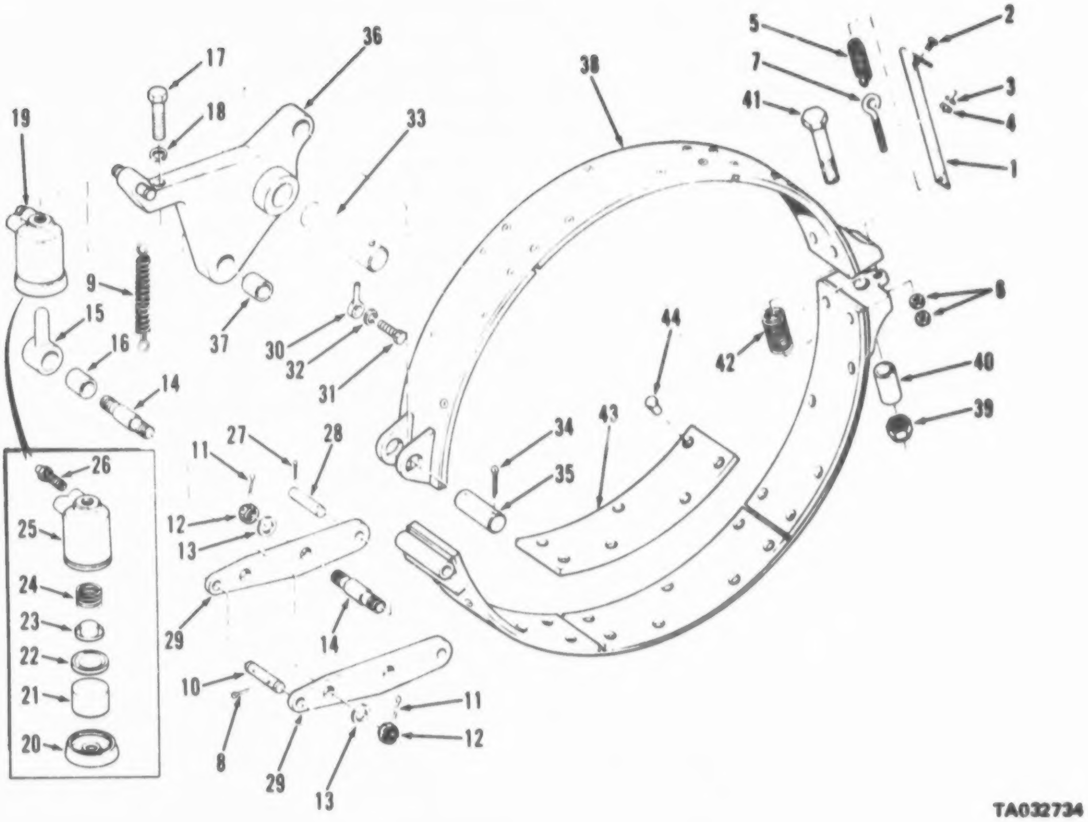

Figure 91. Brake assembly, hoist and digging

(1) ILLUSTRATION (a) FIG NO.	(b) ITEM NO	(2) SMR CODE	(3) NATIONAL STOCK NUMBER	(4) PART NUMBER	(5) FSCM	(6) DESCRIPTION USABLE ON CODE	(7) U/M	(8) QTY INC IN UNIT
						FUNCTIONAL GROUP 40 CLUTCHES,SHAFTS AND BRAKE ASSEMBLIES,CRANE		
91	1	XBOZZ		216T611	27315	.STRAP SPRING..	EA	1
91	2	XDOZZ	5305-00-082-6721	MS51957-81	96906	.SCREW,MACHINE 1/4-20X3/4 STRAP MOUNTING....................	EA	1
91	3	XDOZZ	5310-00-582-5965	MS35339-44	96906	.WASHER,LOCK 1/4 STRAP MOUNTING..............................	EA	1
91	4	XDOZZ	5310-00-880-7744	MS51967-5	96906	.NUT,PLAIN,HEXAGON 5/8-16 BAND MOUNTING......................	EA	1
91	5	PAOZZ	3810-00-718-4367	17H286	27315	.SPRING BAND MOUNTING..	EA	1
91	6	XDOZZ	5310-00-880-7744	MS51967-5	96906	.NUT,PLAIN,HEXAGON 5/8-16 BAND MOUNTING......................	EA	1
91	7	XBOZZ		20H33	27315	.BOLT EYE 5/16-16 X 3X 3/8.......................................	EA	1
91	8	XDOZZ	5315-00-842-3044	MS24665-283	96906	.PIN,COTTER 3/32 X 3/4 PIN MOUNTING..........................	EA	2
91	9	PAOZZ	5360-00-494-2724	17Z317	27315	.SPRING DRAW BAR BAND RETURN.................................	EA	2
91	10	XBOZZ		219T2C5	27315	.PIN STRAIGHT HEADLESS SPRING ARCHOR.........................	EA	1
91	11	XDOZZ	5315-00-013-7228	MS24665-423	96906	.PIN,COTTER 5/32 X 1-1/2 SLOTTED..............................	EA	2
91	12	XDOZZ	5310-00-950-6876	MS35692-45	96906	.NUT,PLAIN,SLOTTED 5/8-11 SHOULDER PIN.......................	EA	2
91	13	XDOZZ	5310-00-823-8803	MS27183-21	96906	.WASHER,FLAT 9/16 SHOULDER PIN MOUNTING......................	EA	4
91	14	XBOZZ		219T213	27315	.PIN HEADLESS SHOULDER LINK ASSEMBLY.........................	EA	2
91	15	XBOZZ		220T3C4F1	27315	.LINK WHEEL CYL PUSH ROD...	EA	1
91	16	PAOZZ	3120-00-485-0015	205T51	27315	..BUSHING,SLEEVE PUSH ROD END.................................	EA	1
91	17	XDOZZ	5305-00-725-4183	MS90726-113	96906	.SCREW,CAP,HEXAGON 1/2-20X 1-1/2 CYLINDER,MOUNTING..........	EA	1
91	18	XDOZZ	5310-00-584-5272	MS35338-48	96906	.WASHER,LOCK 1/2 CYLINDER MOUNTING...........................	EA	1
91	19	PAOOZ	3810-00-436-3157	3PZ208	27315	.CYLINDER ASSEMBLY HOIST AND DIGGING BRAKE...................	EA	1
91	20	PAOZZ	2530-00-521-6991	FC567A	63477	..BOOT,DUST AND CYLINDER...	EA	1
91	21	XAOZZ		FC575E	63477	..PISTON HYDRAULI BRAKE CYLINDER HOISTING....................	EA	1
91	22	XAOZZ		FC48736	63477	..CUP CYLINDER BRAKE CYLINDER..................................	EA	1
91	23	XAOZZ		FC18784	63477	..CUP EXPANDER BRAKE CYLINDER..................................	EA	1
91	24	XAOZZ		FC31720	63477	..SPRING HYD CYL BRAKE CYLINDER................................	EA	1
91	25	XAOZZ		FF22565	63477	..BODY HYD CYL BRAKE CYLINDER..................................	EA	1
91	26	XAOZZ		FC11410	63477	..VALVE BLEEDER HYDRAULIC..	EA	1
91	27	XDOZZ	5315-00-835-5822	MS24665-353	96906	.PIN COTTER 1/8 X 1 PIN MOUNTING..............................	EA	2
91	28	XBOZZ		19F50090	27315	.PIN STRAIGHT HEADLESS SPRING ANCHOR..........................	EA	1
91	29	XDOZZ		206T151	27315	.LINK BRAKE ACT BRAKE ACT..	EA	1
91	30	XDOZZ		220T345	27315	.PIN LOCKING BRAKE ACT...	EA	1
91	31	XDOZZ	5305-00-942-2196	MS18154-60	96906	.SCREW,CAP,HEXAGON 3/8-16 X 1 EYE PIN.........................	EA	1
91	32	XDOZZ	5310-00-637-9541	MS35338-46	96906	.WASHER,LOCK 3/8 EYE PIN MOUNTING............................	EA	1
91	34	XDOZZ	5315-00-236-1664	MS24665-455	96906	.PIN,COTTER 3/16 X 1-1/2 PIN MOUNTING........................	EA	1
91	35	XBOZZ		19F55047	27315	.PIN STRAIGHT HEADLESS BAND MOUNTING.........................	EA	1
91	36	XDOZZ		206P169F1	27315	.LINK BAND ACT BRAKE BAND ACT..................................	EA	1
91	37	PAOZZ	3120-00-485-0019	205T51	27315	..BUSHING,SLEEVE BRAKE ACT.......................................	EA	1
91	38	XDOZZ		215N135F1	27315	.BRAKE BAND ASSY HOIST...	EA	1
91	39	XDOZZ	5310-01-025-6272	20H153505	27315	..NUT SELF-LOCKING, BRAKE BAND.................................	EA	1

(1) ILLUSTRATION (a) FIG NO.	(b) ITEM NO.	(2) SMR CODE	(3) NATIONAL STOCK NUMBER	(4) PART NUMBER	(5) FSCM	(6) DESCRIPTION USABLE ON CODE	(7) U/M	(8) QTY INC IN UNIT
91	40	XDOZZ		18P933052	27315	..SPACER TUBE BRAKE BAND..	EA	1
91	41	PAOZZ	5305-01-029-6834	20Z640142	27315	..SCREW,CAP,HEXAGON..	EA	1

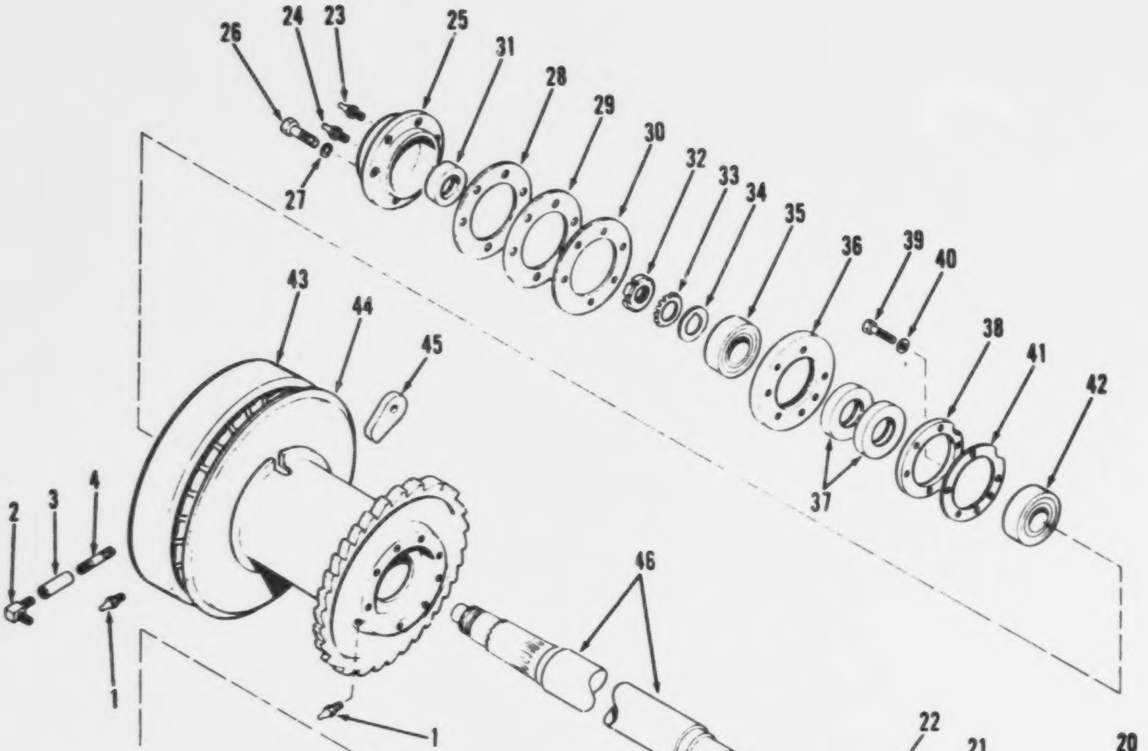

Figure 92. Shaft assembly, hoist

(1) ILLUSTRATION (a) FIG NO.	(b) ITEM NO.	(2) SMR CODE	(3) NATIONAL STOCK NUMBER	(4) PART NUMBER	(5) FSCM	(6) DESCRIPTION USABLE ON CODE	(7) U/M	(8) QTY INC IN UNIT
						FUNCTIONAL GROUP 40 CLUTCHES,SHAFTS AND BRAKE ASSEMBLIES,CRANE		
92	1	PAOZZ	4730-00-050-4208	MS15003-1	96906	.FITTING,LUBRICATION LUBE 1 8 NPT	EA	3
92	2	PAOZZ	4730-00-812-7999	C5405X6	79470	.ELBOW,PIPE TO TUBE PIPE LUBRICATING	EA	1
92	3	XDOZZ	3810-01-052-3935	24CC8V002	27315	.COUPLING PIPE LUBRICATING	EA	2
92	4	XDOZZ	4730-00-196-2098	MS51953-408	96906	.NIPPLE PIPE LUBRICATING	EA	1
92	5	XDOZZ	4730-00-420-5624	2415V041	27315	.NIPPLE,PIPE PIPE LUBRICATING	EA	1
92	23	XDOZZ	4730-00-050-4208	MS15003-1	96906	.FITTING,LUBRICATION LUBE	EA	1
92	24	PAOZZ	3830-00-637-2576	47200	57733	.VALVE,SAFETY RELIEF RELIEF LUBE	EA	1
92	45	PAOZZ	4030-00-443-2067	9797C3	27315	.WEDGE WIRE ROPE	EA	1

AMC FORM 1779, 1 OCT 73 (REPLACES AMC TEST FORMS 1753 AND 1754, 6 APR 70, WHICH WILL BE USED UNTIL 1 JUL 74)

REPAIR PARTS LIST

best copy available

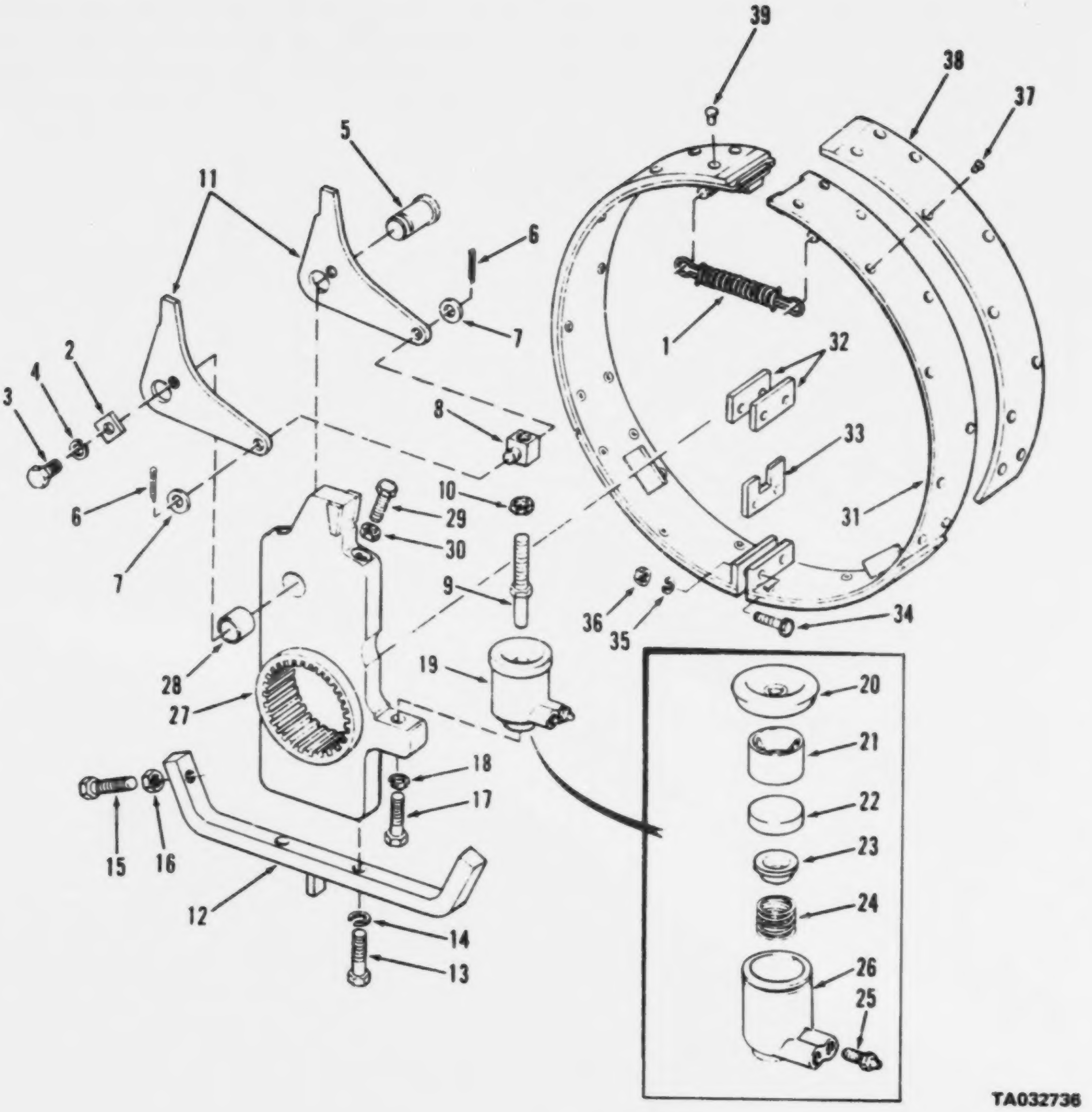

Figure 93. Clutch assembly, digging

(1) ILLUSTRATION (a) FIG NO.	(b) ITEM NO.	(2) SMR CODE	(3) NATIONAL STOCK NUMBER	(4) PART NUMBER	(5) FSCM	(6) DESCRIPTION USABLE ON CODE	(7) U/M	(8) QTY INC IN UNIT
						FUNCTIONAL GROUP 40 CLUTCHES,SHAFTS AND BRAKE ASSEMBLIES,CRANE		
93	8	XDOZZ	3815-00-462-4693	218T217	27315	.TRUNNION,CLUTCHROD TRUNNION..................................	EA	1
93	9	XDOZZ	2530-00-485-0993	220T156	27315	.PUSH ROD,HYDRAULIC	EA	1
93	10	XDOZZ	5310-00-943-2141	MS51968-15	96906	.NUT,PLAIN,HEXAGON PLAIN HEX 1-2-20X1-1-2...................	EA	1
93	11	XDOZZ	2530-01-029-3225	206T77C1	27315	.LEVER,STEERING CLUTCH ACTUATING.............................	EA	2
93	12	XDOZZ	2590-01-028-8659	214P64	27315	.BRACKET BAND POSITIONING.......................................	EA	1
93	13	XDOZZ	5305-00-725-4183	MS90726-113	96906	.SCREW,CAP,HEXAGON CAP HEX 1-2-20X1-1-2....................	EA	2
93	14	XDOZZ	5310-00-584-5272	MS35338-48	96906	.WASHER,LOCK LOCK 1-2..	EA	2
93	15	XDOZZ	5305-00-725-4183	MS90726-113	96906	.SCREW,CAP,HEXAGON 1-2-20X1-1-2................................	EA	2
93	16	XDOZZ	5310-00-943-2141	MS51968-15	96906	.NUT,PLAIN,HEXAGON PLAIN HEX 1-2-20X1-1-2...................	EA	2
93	17	XDOZZ	5305-00-725-4187	MS90726-114	96906	.SCREW,CAP,HEXAGON CAP HEX 1-2-20X1-3-4....................	EA	1
93	18	XDOZZ	5310-00-584-5272	MS35338-48	96906	.WASHER,LOCK 1-2..	EA	1
93	19	PAOZZ	3810-00-436-3157	382208	27315	.CYLINDER ASSY...	EA	1
93	20	PCOZZ	2530-00-521-4981	FC967A	63477	..BOOT,DUST AND CYL ASSY...	EA	1
93	21	XAOZZ		FC578C2	63477	..PISTON HYD..	EA	1
93	22	XAOZZ		FC48736	63477	..CUP CYLINDER..	EA	1
93	23	XAOZZ		FC16784	63477	..CUP EXPANDER..	EA	1
93	24	XAOZZ		FC31720	63477	..SPRING PISTON RETURN..	EA	1
93	25	XBOZZ	2530-00-287-8257	FC11410	63477	..VALVE BLEEDER HYD..	EA	1
93	26	XAOZZ		FE22565	63477	..BODY CYL HYD..	EA	1
93	31	XDOZZ		215A131F1	27315	.BAND ASSY DIGGING CLUTCH..	EA	1
93	32	XDOZZ		18T6700020	27315	..SPACER CLUTCH BAND...	EA	1
93	33	XDOZZ		218T588	27315	..SPACER CLUTCH BAND...	EA	1
93	34	XDOZZ	5305-00-071-1770	MS90725-116	96906	..SCREW,CAP,HEXAGON CAP HEX 1-2-13X2-1-4..................	EA	2
93	35	XDOZZ	5310-00-584-5272	MS35338-48	96906	..WASHER,LOCK LOCK 1-2..	EA	1
93	36	XDOZZ	5310-00-768-0318	MS51967-14	96906	..NUT,PLAIN,HEXAGON 1-2-13.......................................	EA	2

AMC FORM 1778, 1 OCT 73 (REPLACES AMC TEST FORMS 1753 AND 1754, 6 APR 70, WHICH WILL BE USED UNTIL 1 JUL 74)

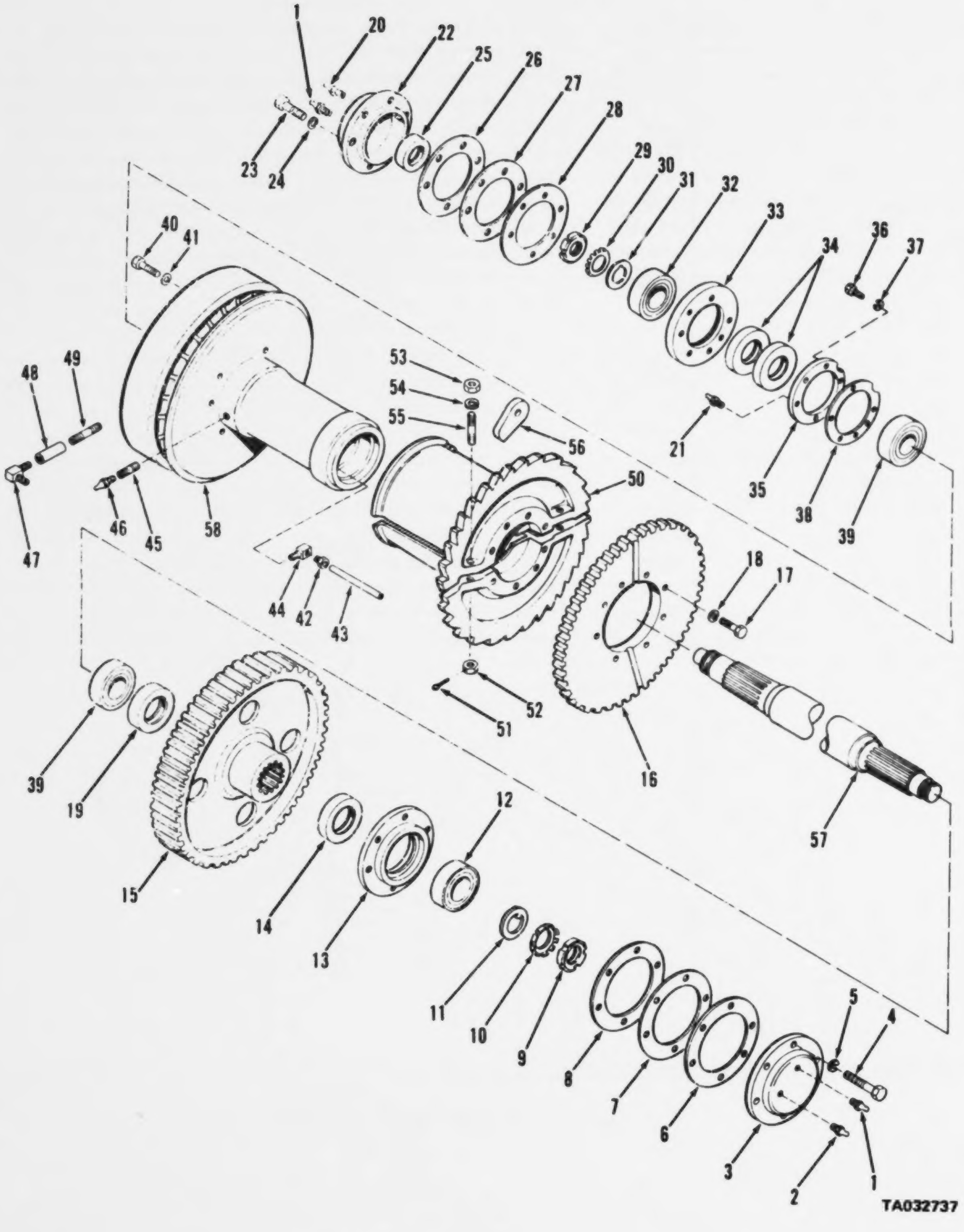

Figure 94. Shaft assembly, digging

(1) ILLUSTRATION (a) FIG NO.	(b) ITEM NO.	(2) SMR CODE	(3) NATIONAL STOCK NUMBER	(4) PART NUMBER	(5) FSCM	(6) DESCRIPTION USABLE ON CODE	(7) U/M	(8) QTY INC IN UNIT
						FUNCTIONAL GROUP 40 CLUTCHES,SHAFTS AND BRAKE ASSEMBLIES,CRANE		
94	1	PAOZZ	4730-00-050-4208	MS15003-1	96906	.FITTING,LUBRICATION LUBE................................	EA	1
94	2	PAOZZ	3830-00-637-2576	47200	57733	.VALVE,SAFETY RELIEF RELIEF................................	EA	1
94	20	PAOZZ	4730-00-050-4208	MS15003-1	96906	.FITTING,LUBRICATION 1-8 NPT................................	EA	1
94	21	PAOZZ	3830-00-637-2576	47200	57733	.VALVE,SAFETY RELIEF 1-8 NPT 1-5 PSI................................	EA	1
94	42	PAOZZ	4730-00-013-7398	5284911	19207	..INVERTED NUT,TUBE LUBRICATION................................	EA	1
94	43	PAOZZ	4730-01-031-1077	220T389	27315	..TUBING COPPER LUBE................................	EA	1
94	44	PAOZZ	4730-00-640-1051	40X5	79470	..ELBOW,PIPE TO TUBE P TO T LUBRICATING................................	EA	1
94	45	XBOZZ		240BV001	27315	..COUPLING PIPE LUBE................................	EA	1
94	46	XBOZZ	4730-00-018-5566	2423VC01	27315	..PLUG PIPE LUBE................................	EA	1
94	47	XDOZZ	4730-00-580-7469	C5405X6	79470	.ELBOW,PIPE TO TUBE P TO T LUBE................................	EA	1
94	48	XBOZZ	4730-00-595-0676	240BV002	27315	.COUPLING PIPE LUBE................................	EA	1
94	49	XBOZZ	4730-00-420-5624	2415VC41	27315	.NIPPLE PIPE LUBE................................	EA	1

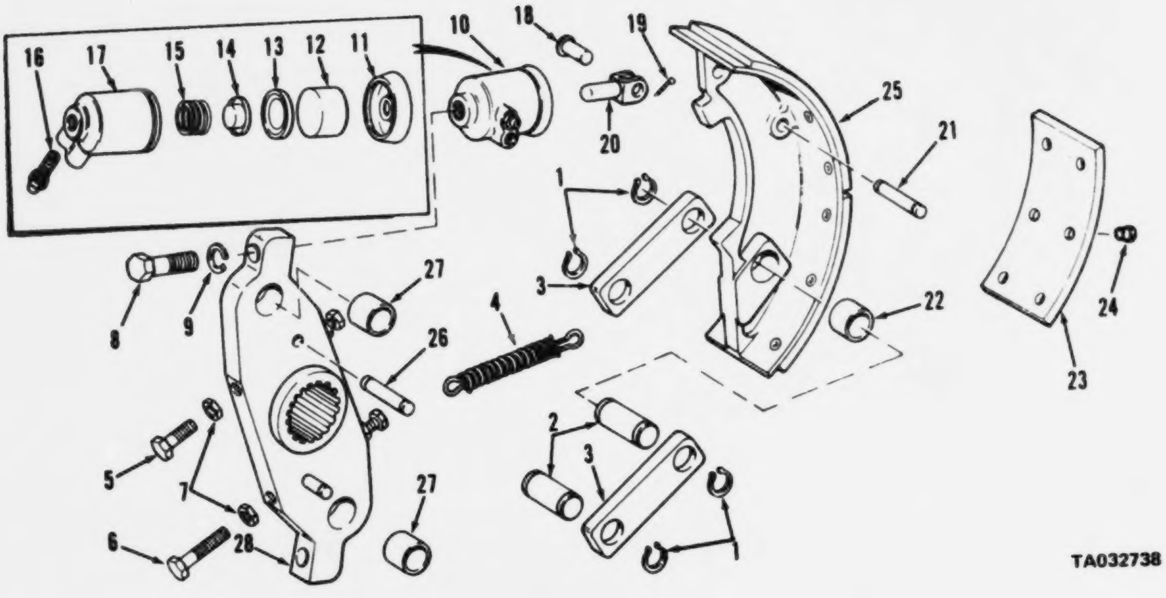

Figure 95. Clutch assembly, left swing

SECTION II

(1) ILLUSTRATION (a) FIG NO.	(b) ITEM NO.	(2) SMR CODE	(3) NATIONAL STOCK NUMBER	(4) PART NUMBER	(5) FSCM	(6) DESCRIPTION USABLE ON CODE	(7) U/M	(8) QTY INC IN UNIT
						FUNCTIONAL GROUP 40 CLUTCHES, SHAFTS AND BRAKE ASSEMBLIES, CRANE		
95	1	XDOZZ		5101-100	79136	.RING RETAINING GROOVED PIN	EA	1
95	2	XDOZZ		219785	27315	.PIN SHOE	EA	4
95	3	XDOZZ		206739	27315	.LINK SHOE	EA	4
95	4	PAOZZ	5360-00-494-2726	172378	27315	.SPRING DRAW BAR RETURN DRAWBAR	EA	4
95	5	XDOZZ	5305-00-269-2805	MS90726-62	96906	.SCREW,CAP,HEXAGON CAP HEX 1-2-20X2	EA	2
95	6	XDOZZ	5305-00-269-2811	MS90726-67	96906	.SCREW,CAP,HEXAGON 3-8-24X2-1-4	EA	4
95	7	XDOZZ	5310-00-725-7382	MS35650-624	96906	.NUT,PLAIN,HEXAGON PLAIN HEX 3-8-24	EA	4
95	8	XDOZZ	5305-00-226-7768	MS90726-115	96906	.SCREW,CAP,HEXAGON CAP HEX 1-2-20X2	EA	2
95	9	XDOZZ	5310-00-584-5272	MS35338-48	96906	.WASHER,LOCK LOCK 1-2	EA	2
95	10	PAOZZ	3810-00-436-3157	382208	27315	.CYL ASSY HYDRAULIC	EA	2
95	11	PAOZZ	2530-00-521-4981	FC567A	63477	..BOOT,DUST AND DUST HYD CYL	EA	1
95	12	XAOZZ		FC975E	63477	..PISTON HYDRAULIC	EA	1
95	13	XAOZZ		FC48736	63477	..CUP PISTON HYDRAULIC	EA	1
95	14	XAOZZ		FC16784	63477	..EXPANDER,CUP CUP	EA	1
95	15	XAOZZ		FC31720	63477	..SPRING,PISTON HYDRAULIC	EA	1
95	16	XBOZZ	2530-00-287-8252	FC1141C	63477	..VALVE,BLEED HYDRAULIC	EA	1
95	17	XAOZZ		FF22565	63477	..BODY,CYLINDER CYLINDER	EA	1
95	18	XDOZZ		35	71177	.PIN,STRAIGHT HEAD SHOE MOUNTING	EA	1
95	19	XDOZZ	5315-00-842-3044	MS24665-283	96906	.PIN,COTTER 3/32 X 3/4,STRAIGHT PIN	EA	2
95	20	XDOZZ		FC970	63477	.LINK,CYLINDER SWING CLUTCH	EA	2

AMC FORM 1779, 1 OCT 73 (REPLACES AMC TEST FORMS 1753 AND 1754, 6 APR 70, WHICH WILL BE USED UNTIL 1 JUL 74)

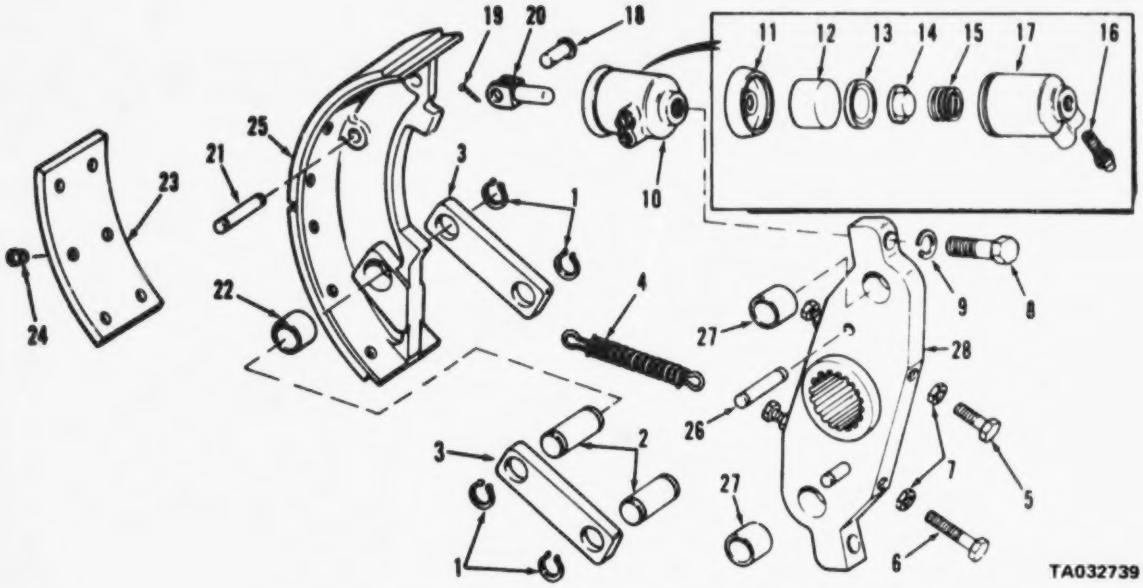

Figure 96. Clutch assemblies, reversing and right swing

(1) ILLUSTRATION (a) FIG NO.	(b) ITEM NO.	(2) SMR CODE	(3) NATIONAL STOCK NUMBER	(4) PART NUMBER	(5) FSCM	(6) DESCRIPTION USABLE ON CODE	(7) U/M	(8) QTY INC IN UNIT
						FUNCTIONAL GROUP 40 CLUTCHES,SHAFTS AND BRAKE ASSEMBLIES,CRANE		
96	1	XDOZZ		5101-100	79136	.RING,RETAINING GROOVED PIN..................................	EA	8
96	2	XDOZZ		219785	27315	.PIN,GROOVE,LINK SHOE LINK.....................................	EA	4
96	3	XDOZZ		206739	27315	.LINK,SHOE MOUNTING SHOE LINK................................	EA	4
96	4	PAOZZ	5360-00-494-2726	172378	27315	.SPRING,EXTENSION SHOE RETURN................................	EA	4
96	5	XDOZZ	5305-00-269-2805	MS90726-62	96906	.SCREW,CAP,HEXAGON 3/8-24X1-1/4 SHOE..........................	EA	2
96	6	XDOZZ	5305-00-269-2811	MS90726-67	96906	.SCREW,CAP,HEXAGON 3/8-24X2-1/4,SHOE..........................	EA	2
96	7	XDOZZ	5310-00-732-0559	MS51968-8	96906	.NUT,PLAIN,HEXAGON 3/8-24 SHOE SPACER.........................	EA	2
96	8	PAOZZ	5305-00-226-7768	MS90726-115	96906	.SCREW,CAP,HEXAGON 1/2-20X2,CYLINDER MTG......................	EA	2
96	9	XDOZZ	5310-00-584-5272	MS35338-48	96906	.WASHER,LOCK 1/2 CYLINDER MOUNTING............................	EA	2
96	10	PAOZZ	3810-00-436-3157	382208	27315	.CRANE CYLINDER HYDRAULIC BRAKE...............................	EA	2
96	11	PAOZZ	2530-00-521-4981	FC967A	63477	..BOOT,DUST AND MOIST HYDRAULIC CYLINDER......................	EA	1
96	12	KFOZZ		FC975E	63477	..PISTON,CYLINDER BRAKE.......................................	EA	1
96	13	KFOZZ		FC48736	63477	..CUP,PISTON BRAKE..	EA	1
96	14	XAOZZ		FC16784	63477	..EXPANDER CUP BRAKE CYL......................................	EA	2
96	15	XAOZZ		FC31720	63477	..SPRING HEL COMP PISTON RETURN...............................	EA	2
96	16	XBOZZ	2530-00-297-8252	FC11410	63477	..VALVE BLEED HYD CYL...	EA	2
96	17	XAOZZ		FE22565	63477	..BODY CYLINDER BRAKE...	EA	2
96	18	XDOZZ		35	71177	.PIN ST HD SHOE MTG...	EA	2
96	19	XDOZZ	5315-00-842-3044	MS24665-283	96906	.PIN COTTER 3-32X3-4..	EA	4
96	20	XDOZZ		FC970	63477	.LINK CYL SWING CLUTCH..	EA	4

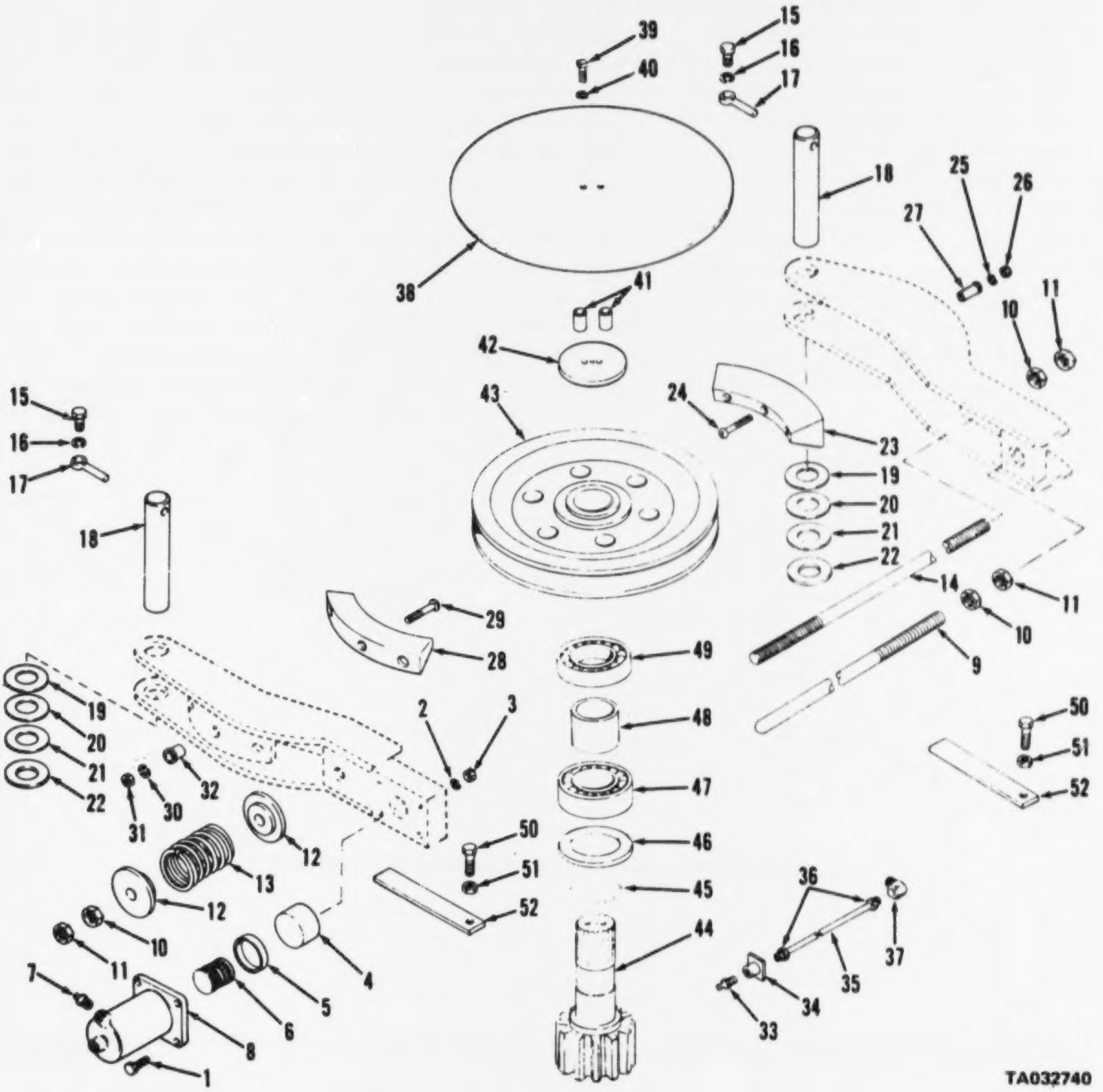

Figure 97. Brake assembly, swing

(1) ILLUSTRATION (a) FIG NO.	(b) ITEM NO.	(2) SMR CODE	(3) NATIONAL STOCK NUMBER	(4) PART NUMBER	(5) FSCM	(6) DESCRIPTION USABLE ON CODE	(7) U/M	(8) QTY INC IN UNIT
						FUNCTIONAL GROUP 40 CLUTCHES,SHAFTS AND BRAKE ASSEMBLIES,CRANE		
97	1	XDOZZ	5305-00-269-3218	MS90725-68	96906	.SCREW,CAP,HEXAGON CAP HEX 3-8-16X2-1-2......................	EA	4
97	2	XDOZZ	5310-00-584-5272	MS35338-48	96906	.WASHER,FLAT 3-8..	EA	4
97	3	XDOZZ	5310-00-732-0558	MS51967-8	96906	.NUT,PLAIN,HEXAGON PLAIN HEX 3-8-16...........................	EA	4
97		PAOZZ	2590-01-028-8661	915P183F3	27315	.CYLINDER HYD ASSY..	EA	1
97	4	XAOZZ		F01237P	63477	..PISTON CYL CYLINDER...	EA	1
97	5	XAOZZ		452344	27315	..CUP CYLINDER..	EA	1
97	6	XAOZZ		FC3209A	63477	..SPRING PISTON RETURN..	EA	1
97	7	XBOZZ		FC4PP8K	63477	..VALVE BLEED HYD...	EA	1
97	8	XAOZZ		15P78701	27315	..BODY CYL HYD..	EA	1
97	9	XDOZZ		22C7330	27315	..ROD RELEASE...	EA	1
97	10	XDOZZ	5310-00-763-8909	MS51968-20	96906	.NUT,PLAIN,HEXAGON PLAIN HEX 5-8-18...........................	EA	3
97	11	XDOZZ	5310-00-835-2037	MS35691-53	96906	.NUT,PLAIN,HEXAGON JAM HEX 5-8-18.............................	EA	3
97	12	XDOZZ		18T8438C1	27315	.SEAT SPRING..	EA	2
97	13	PAOZZ	5360-00-442-6981	172277	27315	.SPRING,HELICAL,COMP ROD RETURN...............................	EA	1
97	14	XDOZZ	5306-00-443-1952	20T4CP4	27315	.ROD,THREADED THREADED..	EA	1
97	15	XDOZZ	5305-00-942-2196	MS18154-60	96906	.SCREW,CAP,HEXAGON 3/8X1,ROD END..............................	EA	2
97	16	XDOZZ		3615V041	27315	.WASHER,LOCK 3/8 ROD END......................................	EA	2
97	17	XDOZZ		20T345	27315	.ROD END PIN MOUNTING...	EA	2
97	18	XDOZZ		2197233	27315	.PIN,SHOE PIVOT SUPPORT.......................................	EA	2
97	19	XDOZZ		19H3892026	27315	.WASHER,SHOE BRAKE SHOE MOUNTING..............................	EA	1
97	20	PAOZZ	5365-00-455-6966	18H38920265	27315	.SHIM BRAKE SHOE MOUNTING.....................................	EA	4
97	21	PAOZZ	5365-00-455-6965	18H38920264	27315	.SHIM BRAKE SHOE MOUNTING.....................................	EA	4
97	22	PAOZZ	5310-00-455-5977	18H38920287	27315	.WASHER,FLAT BRAKE SHOE MOUNTING..............................	EA	4
97		XDOFF	3810-00-442-5866	206A48F1	27315	.SHOE ASSEMBLY, BRAKE LEFT HAND,BRAKE.........................	EA	1
97	23	PAOZZ	2530-00-401-8203	215T79	27315	..SHOE BRAKE..	EA	1
97	24	XDOZZ	5305-00-993-2464	MS35207-288	96906	..SCREW,MACHINE 1/4-28,SHOE MOUNTING..........................	EA	3
97	25	XDOZZ	5310-00-582-5565	MS35338-44	96906	..WASHER,LOCK 1/4 BRAKE SHOE..................................	EA	3
97	26	XDOZZ	5310-00-768-0319	MS51968-2	96906	..NUT,PLAIN,HEXAGON 1/4-28,SHOE MOUNTING......................	EA	3
97	27	XDOZZ		218T550	27315	..PLUG,SHEAR BRAKE SHOE MOUNTING..............................	EA	1
97		XDOFZ	3810-00-436-3158	206A47F1	27315		EA	1
97	28	PAOZZ	2530-00-401-8203	215T75	27315	..SHOE,BRAKE RIGHT HAND.......................................	EA	1
97	29	XDOZZ	5305-00-993-2464	MS35207-288	96906	..SCREW,MACHINE 1/4-28 BRAKE SHOE.............................	EA	3
97	30	XDOZZ	5310-00-582-5965	MS35338-44	96906	..WASHER,LOCK 1/4 BRAKE SHOE..................................	EA	3
97	31	XBOZZ		MS51968-2	96906	..NUT,PLAIN,HEX, 1-4-20,SHOE BRAKES...........................	EA	3
97	32	XDOZZ		218T550	27315	.PLUG SHEAR...	EA	1
97	33	PAOZZ	4730-00-050-4208	MS15003-1	96906	.FITTING,LUBRICATION LUBE 1-8 NPT.............................	EA	1
97	34	XDOZZ		216T30	27315	.BRACKET TUBE MOUNTING..	EA	1

(1) ILLUSTRATION (a) FIG NO.	(b) ITEM NO.	(2) SMR CODE	(3) NATIONAL STOCK NUMBER	(4) PART NUMBER	(5) FSCM	(6) DESCRIPTION USABLE ON CODE	(7) U/M	(8) QTY INC IN UNIT
97	35	XDOZZ		44P183D10	27315	.TUBE ASSEMBLY LUBE LUBE................................	EA	1
97	36	PAOZZ	4730-00-013-7397	FC2577	63477	..INVERTED NUT,TUBE C INVERTED..........................	EA	1
97	37	PAOZZ	4730-00-273-8273	400X4	79470	.ELBOW,PIPE TO TUBE P TO T LUBE TUBE....................	EA	1
97	38	XDOZZ		227P173	27315	.SHIELD PULLEY..	EA	1
97	39	XDOZZ	5305-00-269-2810	MS9C726-68	96906	.SCREW,CAP,HEXAGON CAP HEX 3-8-24X2-1-2.................	EA	2
97	40	XDOZZ	5310-00-584-5272	MS35338-48	96906	.WASHER,LOCK LOCK 1-2...................................	EA	2
97	41	XDOZZ		18P930D32	27315	.SPACER SHIELD COVER....................................	EA	2
97	52	XDOZZ		216T553	27315	.BRACKET ADJ BRAKE SHOE.................................	EA	2

AMC FORM 1775, 1 OCT 73 (REPLACES AMC TEST FORMS 1753 AND 1754, 6 APR 73, WHICH WILL BE USED UNTIL 1 AUL 74)

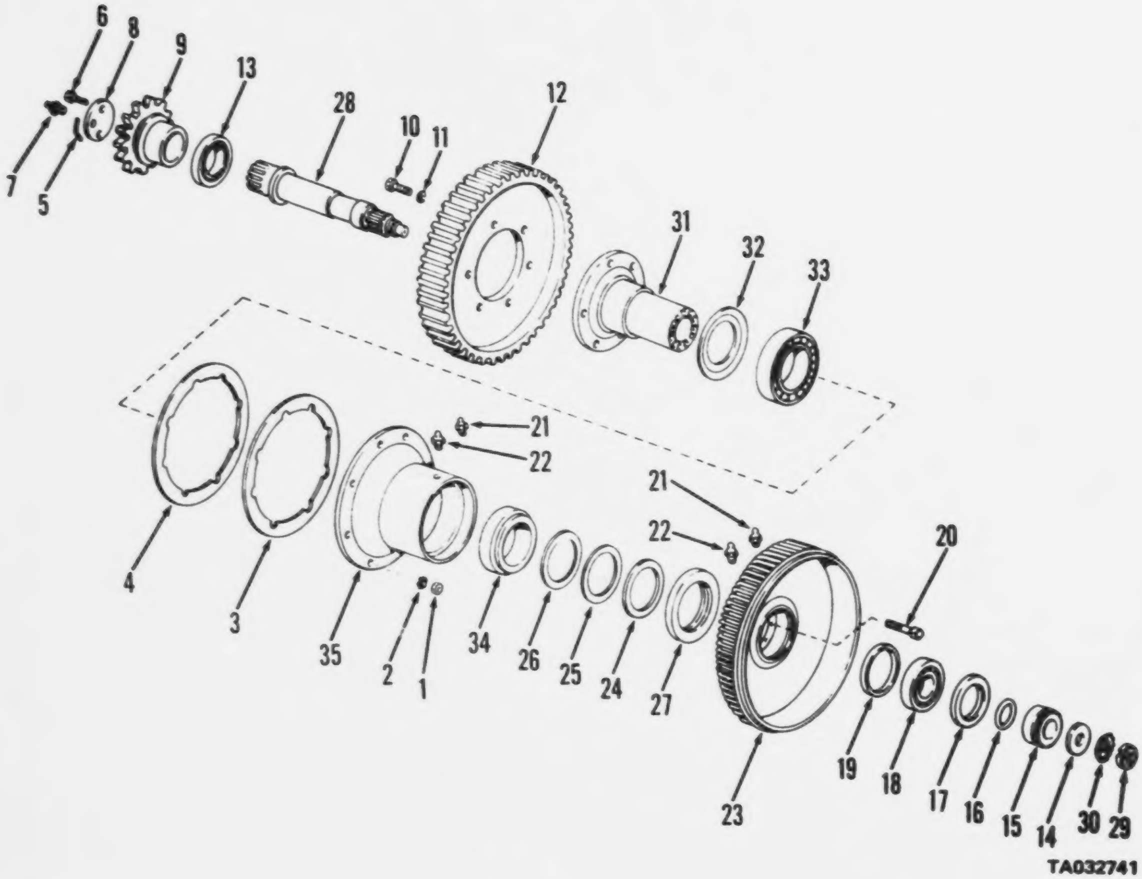

Figure 98. Shaft assembly, reversing

(1) ILLUSTRATION (a) FIG NO.	(b) ITEM NO.	(2) SMR CODE	(3) NATIONAL STOCK NUMBER	(4) PART NUMBER	(5) FSCM	(6) DESCRIPTION USABLE ON CODE	(7) U/M	(8) QTY INC IN UNIT
						FUNCTIONAL GROUP 40 CLUTCHES, SHAFTS AND BRAKE ASSEMBLIES, CRANE		
98	7	PADZZ	4730-00-172-0022	MS15003-2	96906	.FITTING,LUBRICATION LUBE 1-8	EA	1
98	21	PADZZ	4730-00-050-4208	MS15003-1	96906	.FITTING,LUBRICATION LUBE 1-8 NPT	EA	2
98	22	XDDZZ	4730-00-845-0067	4421065	27315	.FITTING RELIEF	EA	2

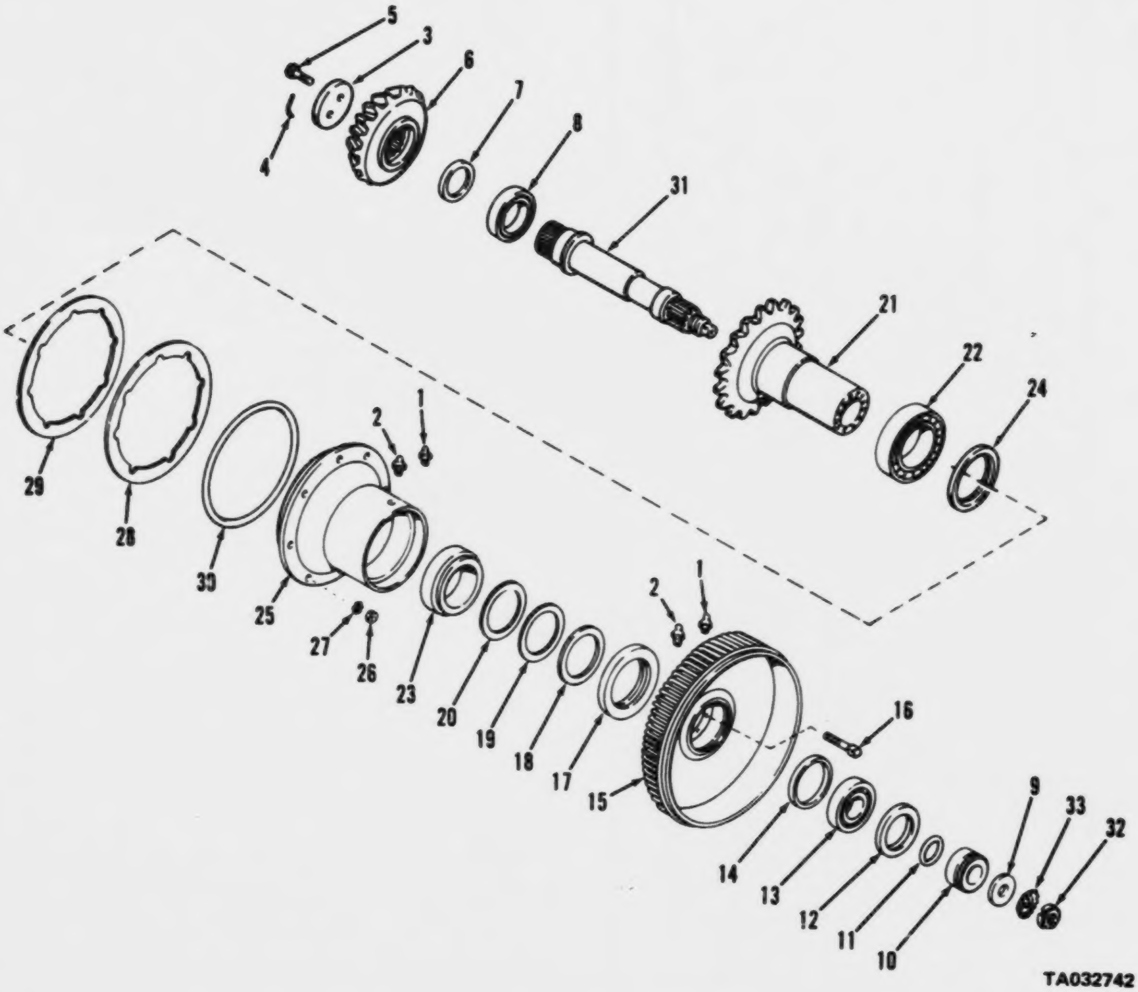

Figure 99. Shaft assembly, horizontal swing

(1) ILLUSTRATION (a) FIG NO.	(b) ITEM NO.	(2) SMR CODE	(3) NATIONAL STOCK NUMBER	(4) PART NUMBER	(5) FSCM	(6) DESCRIPTION USABLE ON CODE	(7) U/M	(8) QTY INC IN UNIT
						FUNCTIONAL GROUP 40 CLUTCHES,SHAFTS AND BRAKE ASSEMBLIES,CRANE		
99	1	PAOZZ	4730-00-050-4208	MS15003-1	96906	.FITTING,LUBRICATION LUBE 1-8 NPT............................	EA	2
99	2	XDOZZ	4730-00-845-0067	4421065	27315	.FITTING RELIEF..	EA	2

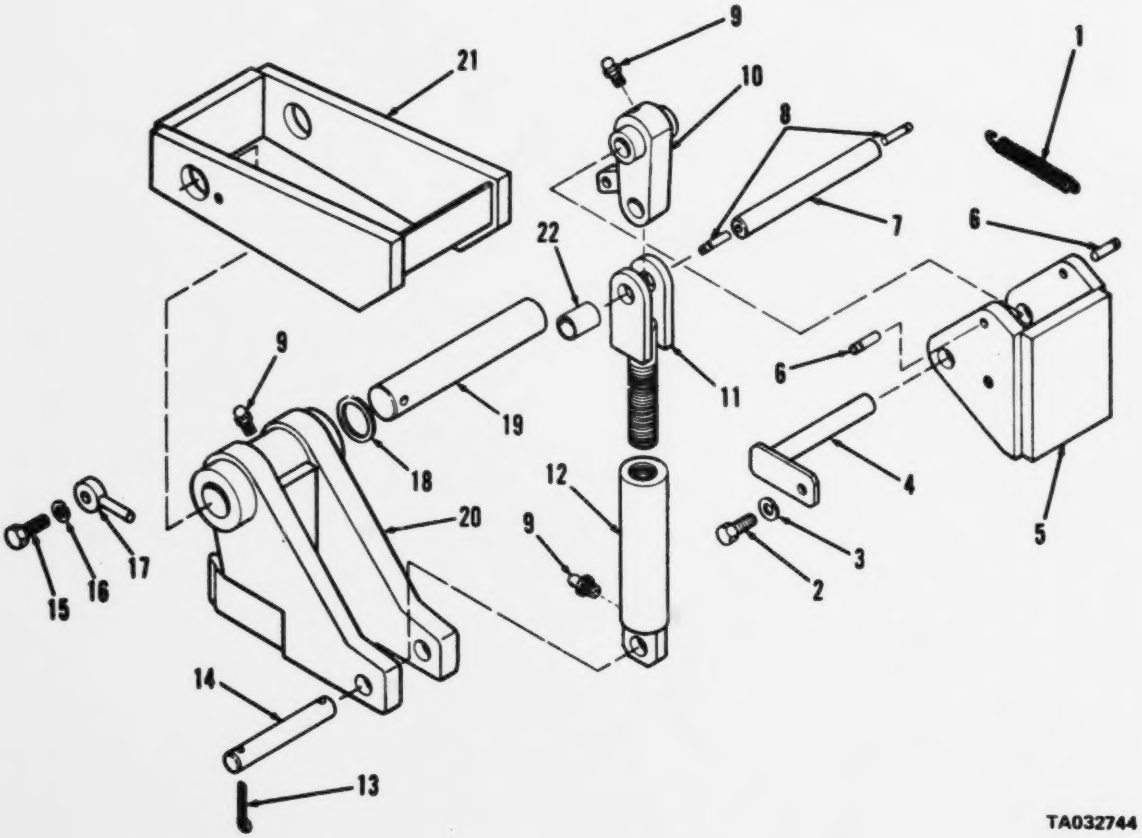

Figure 101. Lock assembly, swing

(1) ILLUSTRATION (a) FIG NO.	(b) ITEM NO.	(2) SMR CODE	(3) NATIONAL STOCK NUMBER	(4) PART NUMBER	(5) FSCM	(6) DESCRIPTION USABLE ON CODE	(7) U/M	(8) QTY INC IN UNIT
						FUNCTIONAL GROUP 40 CLUTCHES,SHAFTS AND BRAKE ASSEMBLIES,CRANE		
101	1	PAOZZ	5360-00-494-2724	17Z317	27315	.SPRING DRAW BAR HEL EXT	EA	2
101	6	XDOZZ		219T28402	27315	..PIN ANCHOR 3-8X2	EA	2
101	7	XDOZZ		19F79D339	27315	.PIN TOGGLE 1X6-5-8	EA	1
101	8	XDOZZ		219T28401	27315	.PIN ANCHOR 3-8X1-3-8	EA	2
101	9	PAOZZ	4730-00-172-0028	MS15003-4	96906	.FITTING,LUBRICATION LUBE 1-8 NPT	EA	2
101	10	XDOZZ		206P159	27315	.LEVER SWING LOCK	EA	1
101	11	XDOZZ		206P200	27315	.YOKE ROD	EA	1
101	12	PAOZZ	5306-01-024-2237	220P204	27315	.EYE BOLT FEMALE	EA	1
101	13	XBOZZ		MS24665-623	96906	..PIN,COTTER: 1-4 X 1 1-2,PIN MOUNTING	EA	2
101	17	XDOZZ		220T416	27315	.ROD END PIN	EA	1
101	21	XDOZZ		216N143	27315	.BRACKET SWING LOCK	EA	1

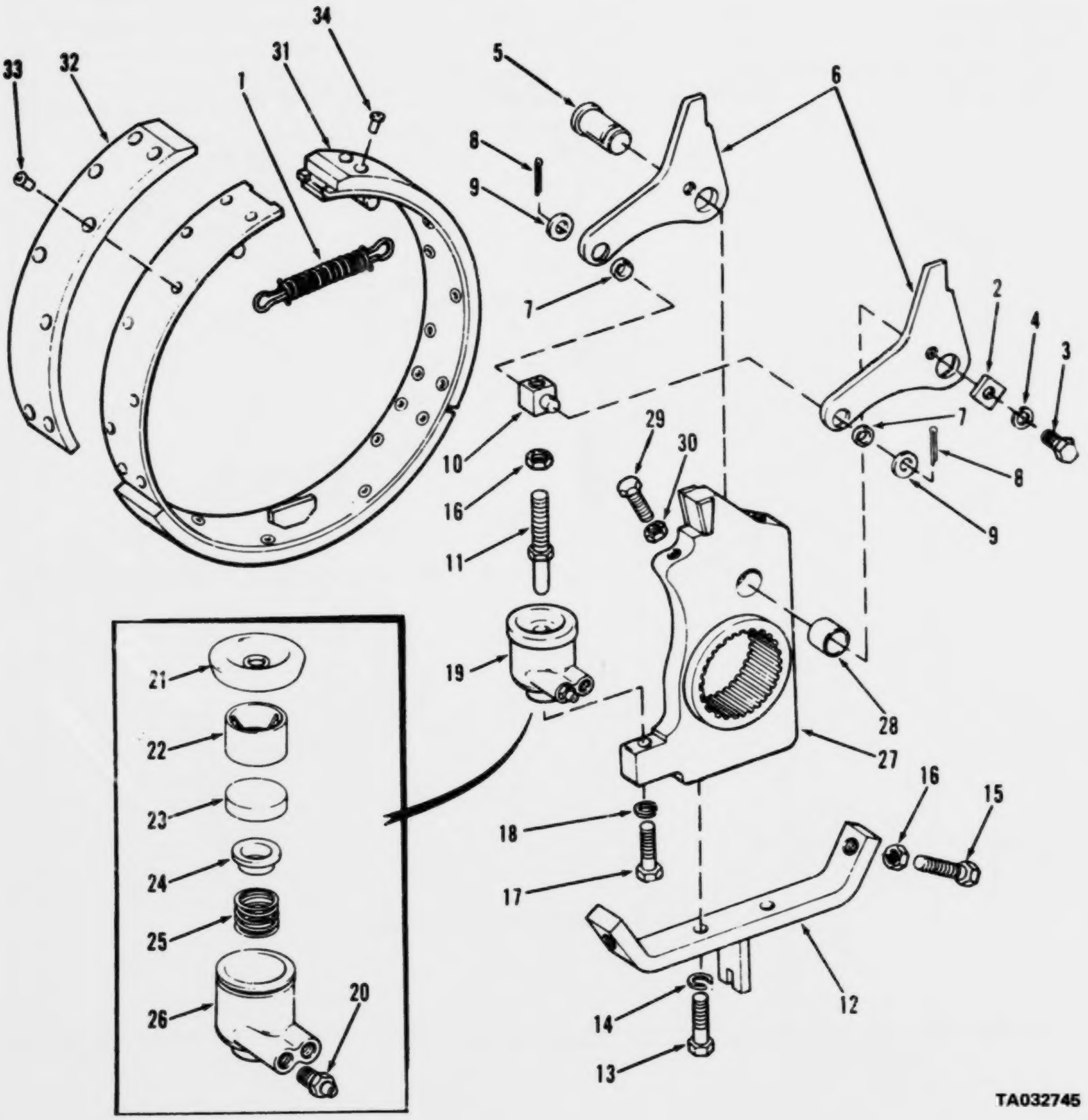

Figure 102. Clutch assembly, boom hoist

(1) ILLUSTRATION		(2)	(3)	(4)	(5)	(6)	(7)	(8)
(a) FIG NO.	(b) ITEM NO.	SMR CODE	NATIONAL STOCK NUMBER	PART NUMBER	FSCM	DESCRIPTION USABLE ON CODE	U/M	QTY INC IN UNIT
						FUNCTIONAL GROUP 41 BOOM HOIST		
102	6	XDOZZ		206P73F1	27315	.LEVER BAND ACTUATING...................................	EA	2
102	7	PAOZZ	3120-00-435-8630	5T1789	27315	..BEARING SLEEVE LEVER ASSY LINKAGE......................	EA	1
102	8	XDOZZ	5315-00-187-9550	M24665-419	96906	.PIN,COTTER COTTER 5-32X1................................	EA	2
102	9	XDOZZ	5310-00-805-5997	MS27183-17	96906	.WASHER,FLAT FLAT 1-2....................................	EA	2
102	10	XDOZZ	3815-00-462-4693	218T217	27315	.LINK LEVER ASSY...	EA	1
102	11	XDOZZ	2530-00-485-0993	220T156	27315	.ROD PUSH HYD CYL..	EA	1
102	12	XDOZZ		214P52	27315	.BRACKET GUIDE HAND......................................	EA	1
102	13	XDOZZ	5305-00-761-4227	MS90726-111	96906	.SCREW,CAP HEXAGON CAP HEX 1-2 20X1-1-4..................	EA	2
102	14	XDOZZ	5310-00-584-5272	MS35338-48	96906	.WASHER,LOCK LOCK 1-2....................................	EA	2
102	15	XDOZZ	5305-00-725-4183	MS90726-113	96906	.SCREW,CAP HEXAGON CAP HEX 1-2 20X1-1-2..................	EA	2
102	16	XDOZZ	5310-00-943-2141	MS51968-15	96906	.NUT,PLAIN,HEXAGON 1/2-20 X 1 3/4........................	EA	2
102	17	XDOZZ	5305-00-725-4187	MS90726-114	96906	.SCREW CAP HEX HD 1-2-20X1 3-4...........................	EA	1
102	18	XDOZZ	5310-00-584-5272	MS35338-48	96906	.WASHER,LOCK 1/2 CYLINDER MOUNTING.......................	EA	1
102	19	PAOZZ	3810-00-436-3157	38Z208	27315	.CRANE CYLINDER BOOM HOIST CLUTCH........................	EA	1
102	20	XBOZZ	2530-00-287-8252	FC1141C	63477	..VALVE,BLEEDER BLEEDER..................................	EA	1
102	21	PAOZZ	2530-00-521-4981	FC967A	63477	..BOOT,DUST AND MOIST HYDRAULIC CYLINDER.................	EA	1
102	22	KFOZZ		FC57802	63477	..PISTON,HYDRAULIC.......................................	EA	1
102	23	KFOZZ		FC48736	63477	..CUP,CYLINDER CYLINDER,HYDRAULIC........................	EA	1
102	24	XAOZZ		FC16784	63477	..CUP,EXPANDER HYDRAULIC.................................	EA	1
102	25	XAOZZ		FC31720	63477	..SPRING,HELICAL,COMP HYDRAULIC CYLINDER.................	EA	1
102	26	XAOZZ		FE22565	63477	..BODY HYDRAULIC CYLINDER................................	EA	1

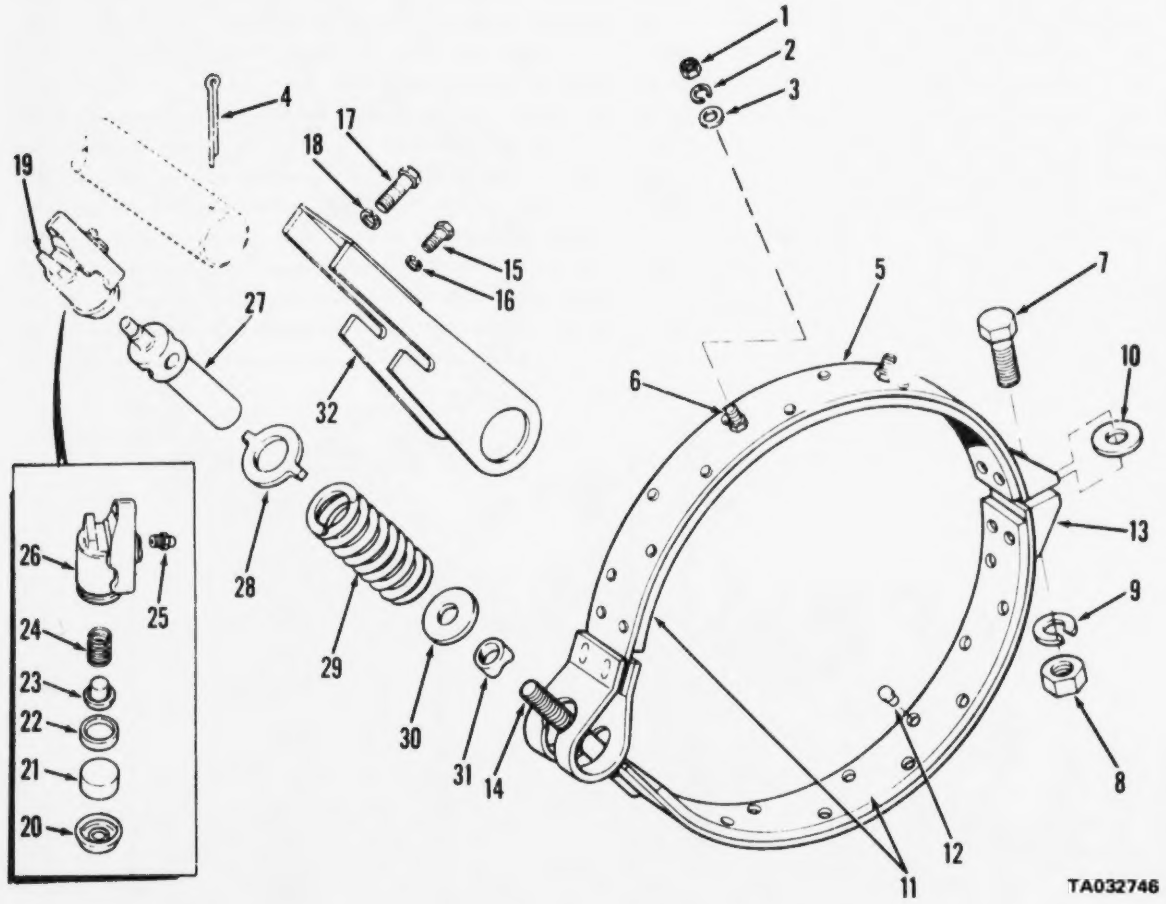

Figure 103. Brake assembly, boom hoist

(1) ILLUSTRATION (a) FIG NO.	(b) ITEM NO.	(2) SMR CODE	(3) NATIONAL STOCK NUMBER	(4) PART NUMBER	(5) FSCM	(6) DESCRIPTION USABLE ON CODE	(7) U/M	(8) QTY INC IN UNIT
						FUNCTIONAL GROUP 41 BOOM HOIST		
103		XDOFF		2915J43-5	27315	.BRAKE ASSEMBLY BOOM HOIST..................................	SE	1
103	1	XDOZZ	5310-00-732-0558	MS51967-8	96906	..NUT,PLAIN,HEXAGON 3/8-16 GUARD MOUNTING..................	EA	2
103	2	XDOZZ	5310-00-637-9541	MS35338-46	96906	..WASHER,LOCK 3/8 GUARD MOUNTING............................	EA	2
103	3	XDOZZ	5310-00-087-7493	MS27183-13	96906	..WASHER,FLAT 3/8 GUARD MOUNTING............................	EA	2
103	4	XDOZZ	5315-00-059-0238	MS24665-753	96906	..PIN,COTTER BRACKET PIN MOUNTING...........................	EA	1
103	5	XBOFF	3815-00-436-3162	215A114F1	27315	..BAND ASSEMBLY BRAKE.......................................	SE	1
103	6	XDOZZ	5305-00-269-3206	MS90725-55	96906	..SCREW,CAP,HEXAGON 3/8-16 X 1/2,GUARD......................	EA	2
103	13	XDOZZ		216T310	27315	..BRACKET,BRAKE BRAKE HAND..................................	EA	2
103	14	XDOZZ		215T54	27315	..ROD,LIVE END LIVE END 3/4-16..............................	EA	1
103	15	XDOZZ	5306-00-225-8496	MS90725-31	96906	..BOLT,MACHINE 5/16-18X5/8,CYLINDER.........................	EA	2
103	16	XDOZZ	5310-00-407-9566	MS35338-45	96906	..WASHER,LOCK 5/16 CYLINDER MOUNTING........................	EA	2
103	17	XDOZZ	5305-00-710-4190	MS90726-85	96906	..SCREW,CAP,HEXAGON 7/16-20X1...............................	EA	2
103	18	XDOZZ	5310-00-209-0965	MS35338-47	96906	..WASHER,LOCK 7/16 CYLINDER MOUNTING........................	EA	1
103	19	PAOZZ	2530-00-350-8646	2915N13-4	27315	..CYLINDER ASSEMBLY,H HOIST BRAKE...........................	EA	1
103	20	PAOZZ	2530-00-296-0855	FD36R	63477	..BOOT,DUST AND HYDRAULIC...................................	EA	1
103	21	XAOZZ		FC1311	63477	..PISTON,HYDRAULIC..	EA	1
103	22	XAOZZ		FC48726	63477	..CUP,CYLINDER HYDRAULIC....................................	EA	1
103	23	XAOZZ		FC11040	63477	..CUP,EXPANDER HYDRAULIC....................................	EA	1
103	24	XAOZZ		FC11449	63477	..SPRING,HELICAL,COMP WHEEL.................................	EA	1
103	25	XBOZZ	2530-00-287-8252	FC11410	63477	..VALVE,BLEEDER HYDRAULIC...................................	EA	1
103	26	XAOZZ		FE3C72	63477	..BODY,CYLINDER HYDRAULIC...................................	EA	1
103	27	XDOZZ		215T66	27315	..PUSH ROD HYDRAULIC..	EA	1
103	28	XDOZZ		218T309	27315	..WASHER,BRAKE BRAKE LINKAGE................................	EA	1
103	29	PAOZZ	5360-00-425-7889	177224	27315	..SPRING,HELICAL,COMP LINKAGE...............................	EA	1
103	30	XDOZZ	5310-00-992-6584	MS27183-26	96906	..WASHER,FLAT 15/16 BRAKE LINKAGE...........................	EA	1
103	31	XDOZZ		216T4.8	27315	..SPACER,BRAKE BRAKE LINKAGE................................	EA	1
103	32	XDOZZ		216A102	27315		EA	1

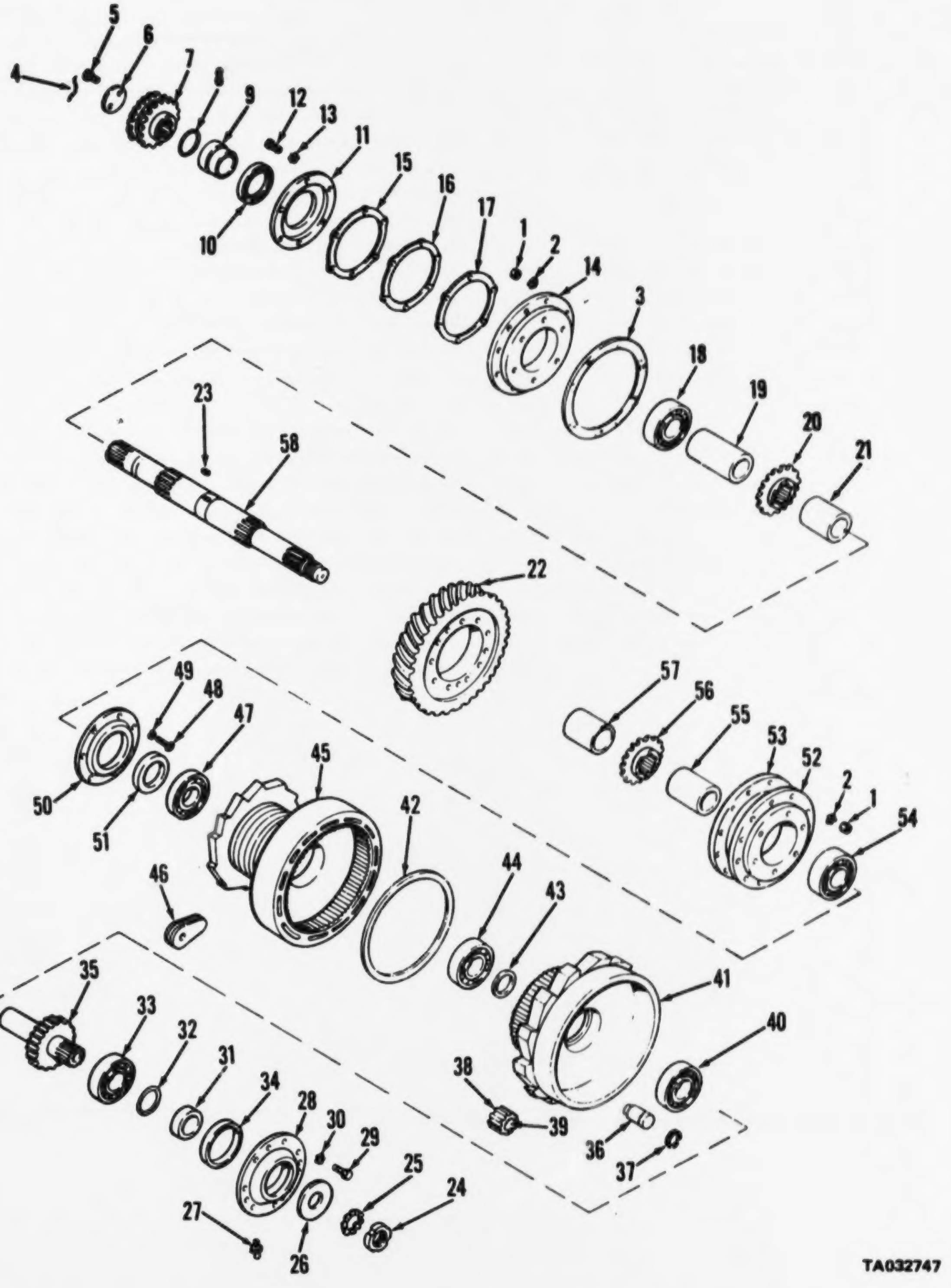

Figure 104. Shaft assembly, boom hoist

(1) ILLUSTRATION (a) FIG NO.	(b) ITEM NO.	(2) SMR CODE	(3) NATIONAL STOCK NUMBER	(4) PART NUMBER	(5) FSCM	(6) DESCRIPTION USABLE ON CODE	(7) U/M	(8) QTY INC IN UNIT
						FUNCTIONAL GROUP 41 BOOM HOIST		
104	27	PAOZZ	4730-00-050-4269	MS15003-1	96906	..FITTING,LUBRICATION LUBE 1-8 NPT............................	EA	1
104	46	XBOZZ		8T323	27315	.WEDGE SOCKET...	EA	1

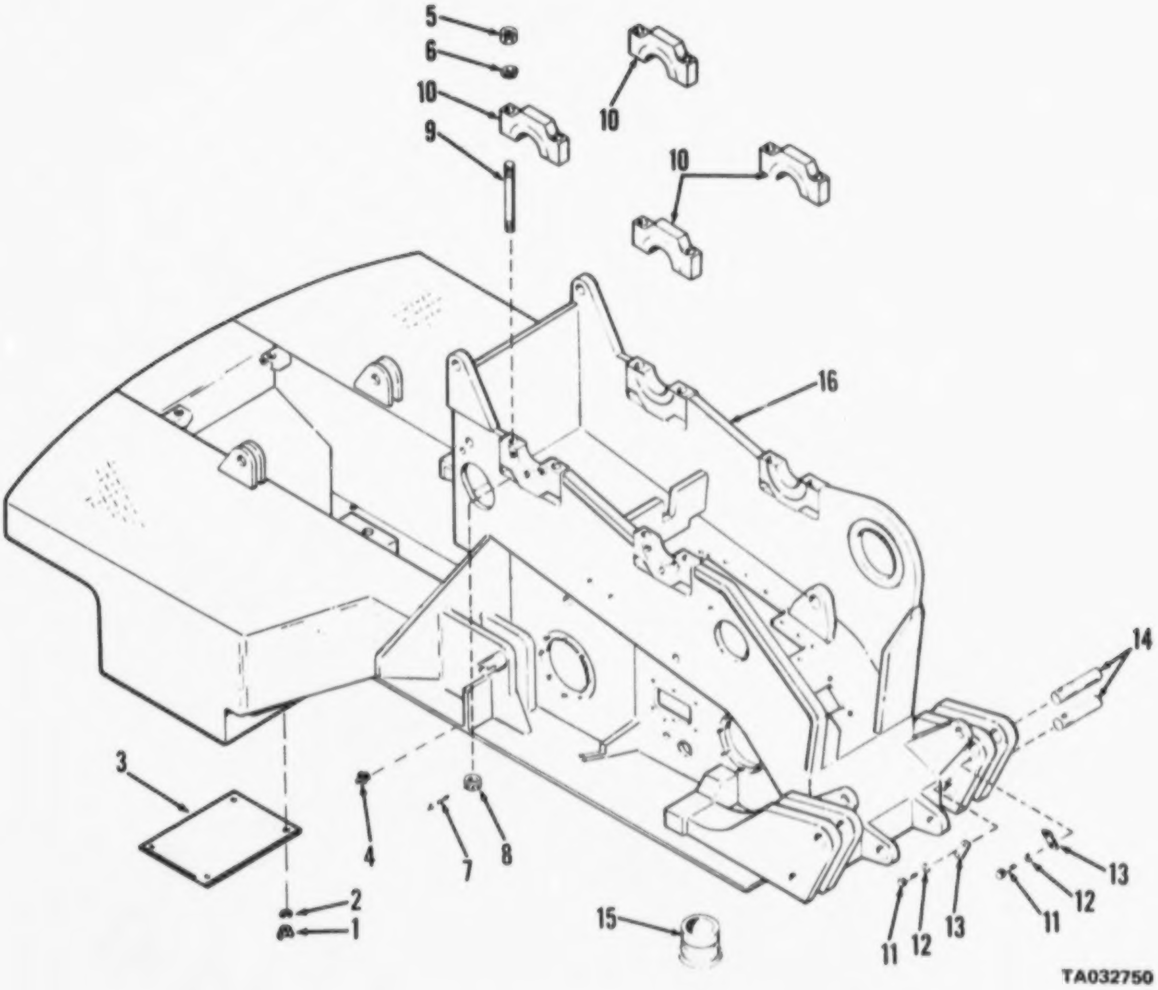

Figure 107. Frame assembly, revolving

(1) ILLUSTRATION (a) FIG NO.	(b) ITEM NO.	(2) SMR CODE	(3) NATIONAL STOCK NUMBER	(4) PART NUMBER	(5) FSCM	(6) DESCRIPTION USABLE ON CODE	(7) U/M	(8) QTY INC IN UNIT
						FUNCTIONAL GROUP 42 REVOLVING FRAME		
107	4	PAOZZ	4730-00-050-4208	MS15003-1	96906	.FITTING,LUBRICATION LUBE 1-8 NPT..............................	EA	1

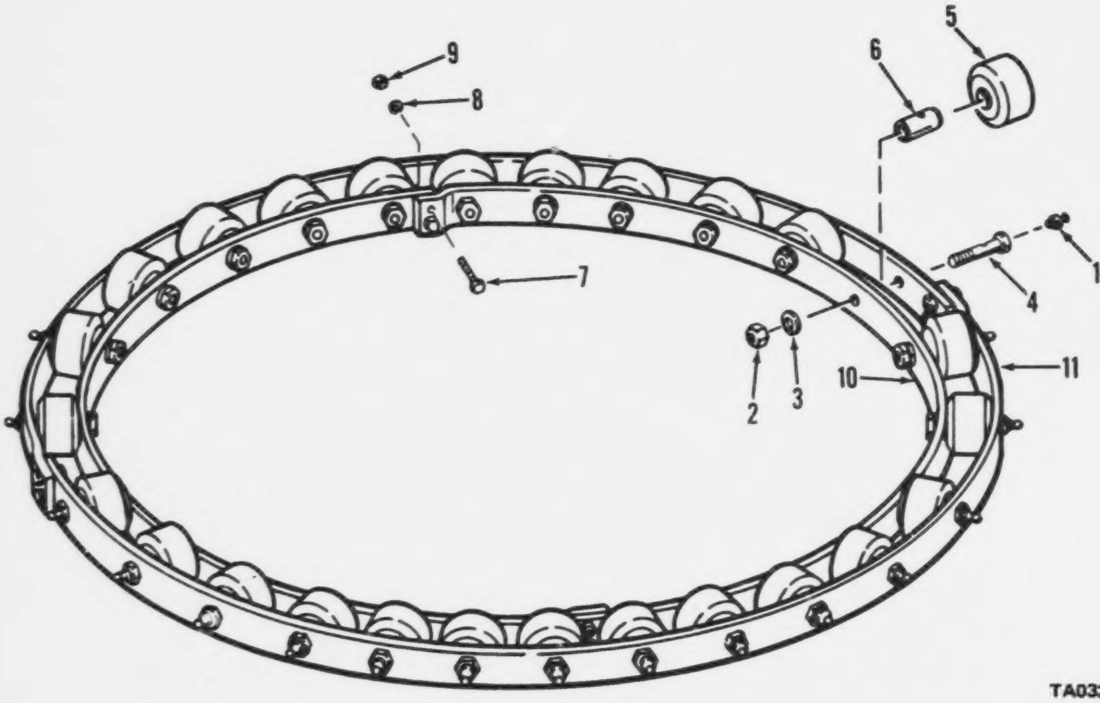

Figure 108. Circle assembly, roller

(1) ILLUSTRATION (a) FIG NO.	(b) ITEM NO.	(2) SMR CODE	(3) NATIONAL STOCK NUMBER	(4) PART NUMBER	(5) FSCM	(6) DESCRIPTION USABLE ON CODE	(7) U/M	(8) QTY INC IN UNIT
						FUNCTIONAL GROUP 42 REVOLVING FRAME		
108	1	PAOZZ	4730-00-050-4208	MS15003-1	96906	.FITTING,LUBRICATION LUBE 1-8...............................	EA	28

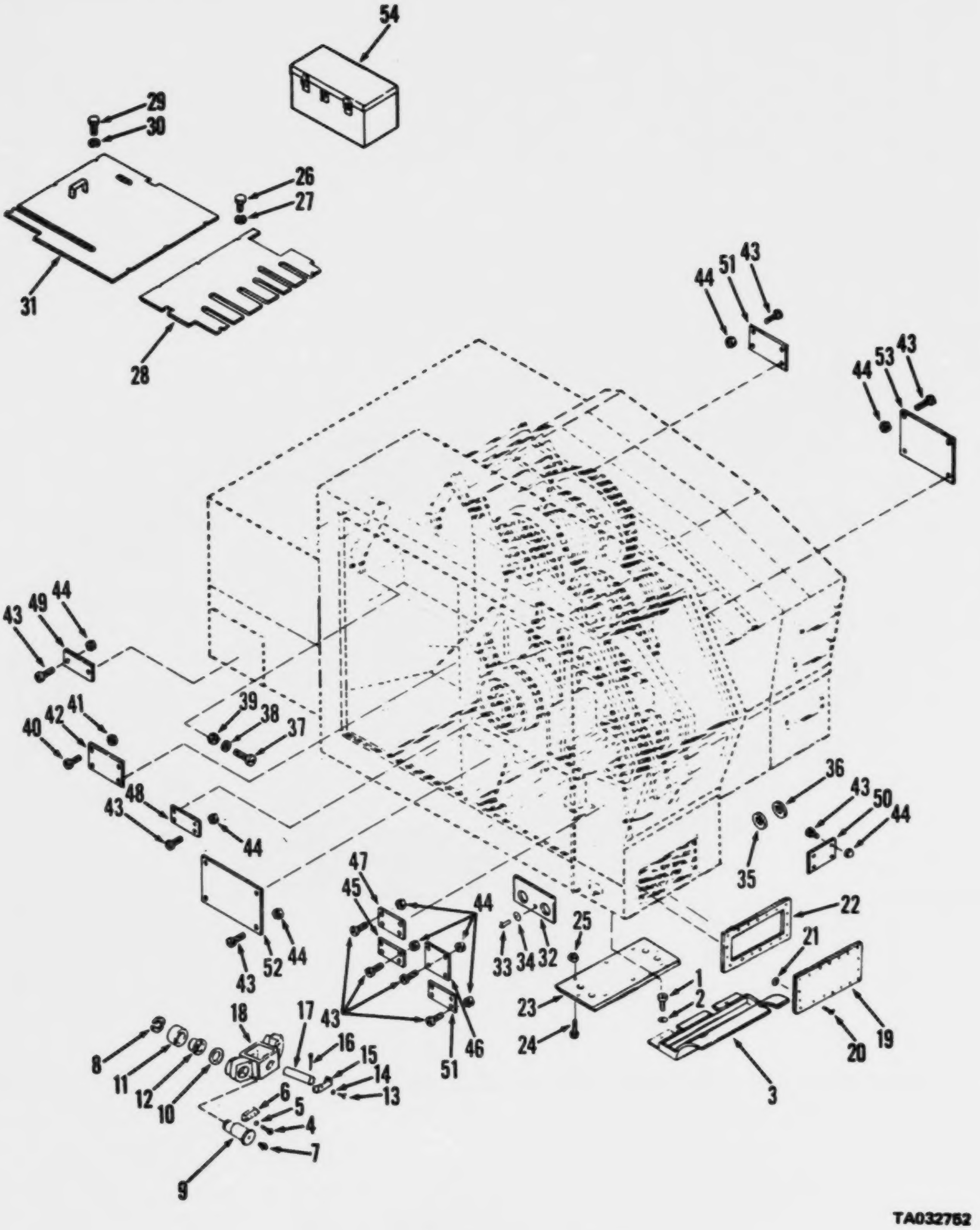

Figure 109. Hook rollers, instruction plates and tool box

(1) ILLUSTRATION (a) FIG NO.	(b) ITEM NO.	(2) SMR CODE	(3) NATIONAL STOCK NUMBER	(4) PART NUMBER	(5) FSCM	(6) DESCRIPTION USABLE ON CODE	(7) U/M	(8) QTY INC IN UNIT
						FUNCTIONAL GROUP 42 REVOLVING FRAME		
109	1	XBOZZ	5305-00-984-5651	MS35206-311	96906	..SCREW,MACHINE MACHINE 3-8-16X1	EA	2
109	2	XBOZZ	5310-00-087-7493	MS27183-13	96906	..WASHER,FLAT FLAT 3-8	EA	6
109	3	XOOZZ		14P2535	27315	..TROUGH DIRT	EA	1
109	4	XBOZZ	5305-00-724-5911	MS90725-163	96906	..SCREW,CAP,HEXAGON CAP HEX 5-8-11X1-3-4	EA	6
109	5	XBOZZ	5310-00-820-6653	MS35338-50	96906	..WASHER,LOCK LOCK 5-8	EA	6
109	6	XOOZZ		18T6935	27315	..PLATE LOCK	EA	6
109	7	PAOZZ	4730-00-048-1788	16278	95879	..FITTING,LUBRICATION LUBE	EA	6
109	8	PAOZZ	3810-00-420-8070	18T6702	27315	..RETAINER SPLIT	EA	6
109	9	XOOZZ		15P812	27315	..PIN ECCENTRIC	EA	6
109	10	XBOZZ	3120-00-458-7099	18T6720	27315	..WASHER THRUST	EA	6
109	13	XBOZZ	5305-00-269-3216	MS90725-66	96906	..SCREW,CAP,HEXAGON CAP HEX 3-8-16X2	EA	1
109	14	XBOZZ	5310-00-637-9541	MS35338-46	96906	..WASHER,LOCK 3-8 LOCK	EA	6
109	15	XOOZZ		18T5035	27315	..PLATE LOCK	EA	3
109	16	XBOZZ	5315-00-187-9589	MS24665-687	96906	..PIN,COTTER COTTER 5-16X2-1-2	EA	3
109	17	XOOZZ	5315-00-455-2673	219T174	27315	..PIN SWIVEL ARM	EA	3
109	18	XOOZZ		16N244	27315	..ARM SWIVEL	EA	3
109	19	XOOZZ		214P56F1	27315	..COVER FRONT CAB	EA	1
109	20	XOOZZ		AJ6-70	72794	STUD FASTENER	EA	16
109	21	PAOZZ	5325-00-435-2169	GP6	72794	GROMMET FASTENER	EA	16
109	22	PAOZZ	5330-00-454-0536	220P180	27315	..GASKET COVER FRONT	EA	1
109	23	XOOZZ		214P55F1	27315	..COVER BOTTOM	EA	1
109	24	PAOZZ	5325-00-489-1067	AJ6-6C	72794	..STUD TURNLOCK FASTENER	EA	6
109	25	PAOZZ	5325-00-435-2168	GP6	72794	..PLASTIC,HALF FASTENER	EA	6
109	26	XBOZZ	5305-00-724-5911	MS90725-163	96906	..SCREW,CAP,HEXAGON CAP HEX 5-8-11X1-3-4	EA	5
109	27	XBOZZ	5310-00-820-6653	MS35338-50	96906	.WASHER,LOCK LOCK 5-8	EA	5
109	28	XOOZZ		27P2669	27315	.PLATE FLOOR	EA	1
109	29	XBOZZ	5305-00-724-5911	MS90725-163	96906	.SCREW,CAP,HEXAGON CAP HEX 5-8-11X1-3-4	EA	6
109	30	XBOZZ	5310-00-820-6653	MS35338-50	96906	.WASHER,LOCK LOCK 5-8	EA	6
109	31	XOOZZ		27P2670	27315	.PLATE FLOOR	EA	1
109	32	XOOZZ		214T42	27315	.COVER ACCESS SIDE RH	EA	1
109	33	PBOZZ	5325-00-489-1067	AJ6-6C	72794	...STUD,TURNLOCK TURNLOCK FASTENER	EA	1
109	34	PBOZZ	5325-00-435-2168	GP6	72794	...PLASTIC HALF FASTENER	EA	1
109	35	XBOZZ	5310-01-029-6843	18H38920134	27315	.WASHER SPACING	EA	1
109	36	XBOZZ		18H38920133	27315	.WASHER SPACING BOOM FOOT	EA	1
109	37	XBOZZ	5305-00-719-5021	MS51955-81	96906	.SCREW,MACHINE MACHINE 1-4-20X3-4 FL HD	EA	3
109	38	PAOZZ	5310-00-824-4547	35622COMSC	73484	.WASHER,SEALING SEALING	EA	3
109	40	XBOZZ	5305-00-764-0086	MS51959-54	96906	.SCREW,MACHINE MACHINE 5-16X1-2	EA	4
109	41	XBOZZ	5310-00-821-6801	20Z616D8	27315	.NUT,PLAIN,CAP PLAIN CAP 5-16-18	EA	4
109	42	XBOZZ	5935-01-032-4057	32N137	27315	.PLATE TRADE MARK CRANE	EA	1

(1) ILLUSTRATION (a) FIG NO.	(b) ITEM NO.	(2) SMR CODE	(3) NATIONAL STOCK NUMBER	(4) PART NUMBER	(5) FSCM	(6) DESCRIPTION USABLE ON CODE	(7) U/M	(8) QTY INC IN UNIT
109	43	XBOZZ	5305-00-984-6189	MS35206-241	96906	.SCREW MACHINE 8-32X1-4	EA	36
109	44	XBOZZ	5310-00-821-6816	202616D4	27315	.NUT,PLAIN,CAP PLAIN CAP 8-32	EA	1
109	45	XBOZZ	9905-01-028-0685	32Q466	27315	.PLATE INST BOOM HOIST	EA	1
109	46	XBOZZ	9905-01-028-0675	32Q468	27315	.PLATE INFORMATION CENTER OF BALANCE AND WEIGHT	EA	1
109	47	XBOZZ	9905-01-028-0676	32Q469	27315	.PLATE CRANE SERIAL NO	EA	1
109	48	XBOZZ	9905-01-028-0678	32Q470	27315	.PLATE TURN TABLE LIFTING	EA	1
109	49	XBOZZ	9905-01-028-0680	32Q471	27315	.PLATE FUEL CAPACITY	EA	1
109	50	PBOZZ	9905-01-028-0683	32U575	27315	.PLATE INST CRANE OPERATION	EA	1
109	51	XBOZZ	9905-01-028-0681	32Q484	27315	.PLATE LOCK PIN OPERATION	EA	1
109	52	PBOZZ	9905-01-028-0684	32U577	27315	.PLATE INST CRANE LUBE	EA	1
109	53	XBOZZ		32U1123	27315	.PLATE INFO CRANE RATING	EA	1

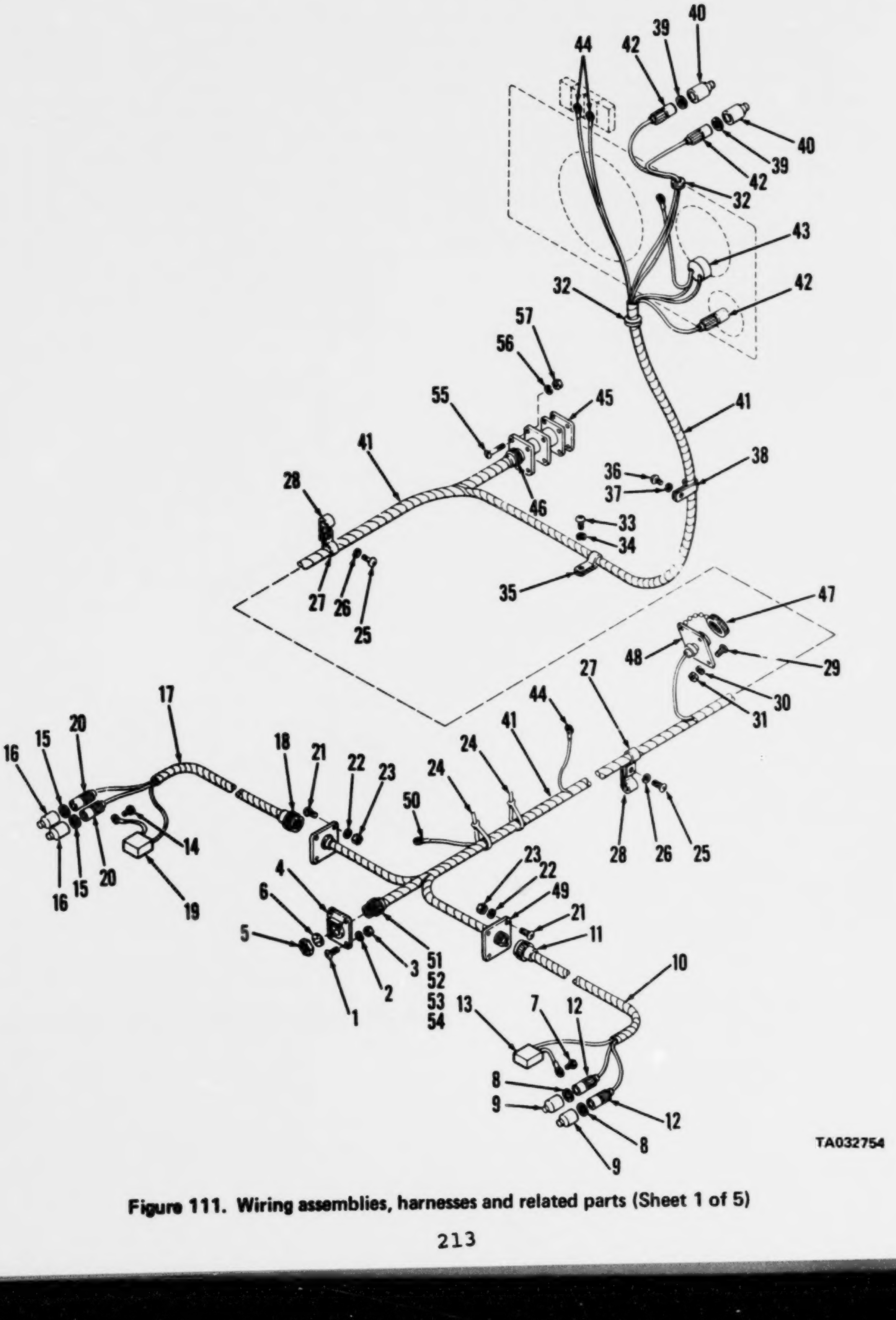

Figure 111. Wiring assemblies, harnesses and related parts (Sheet 1 of 5)

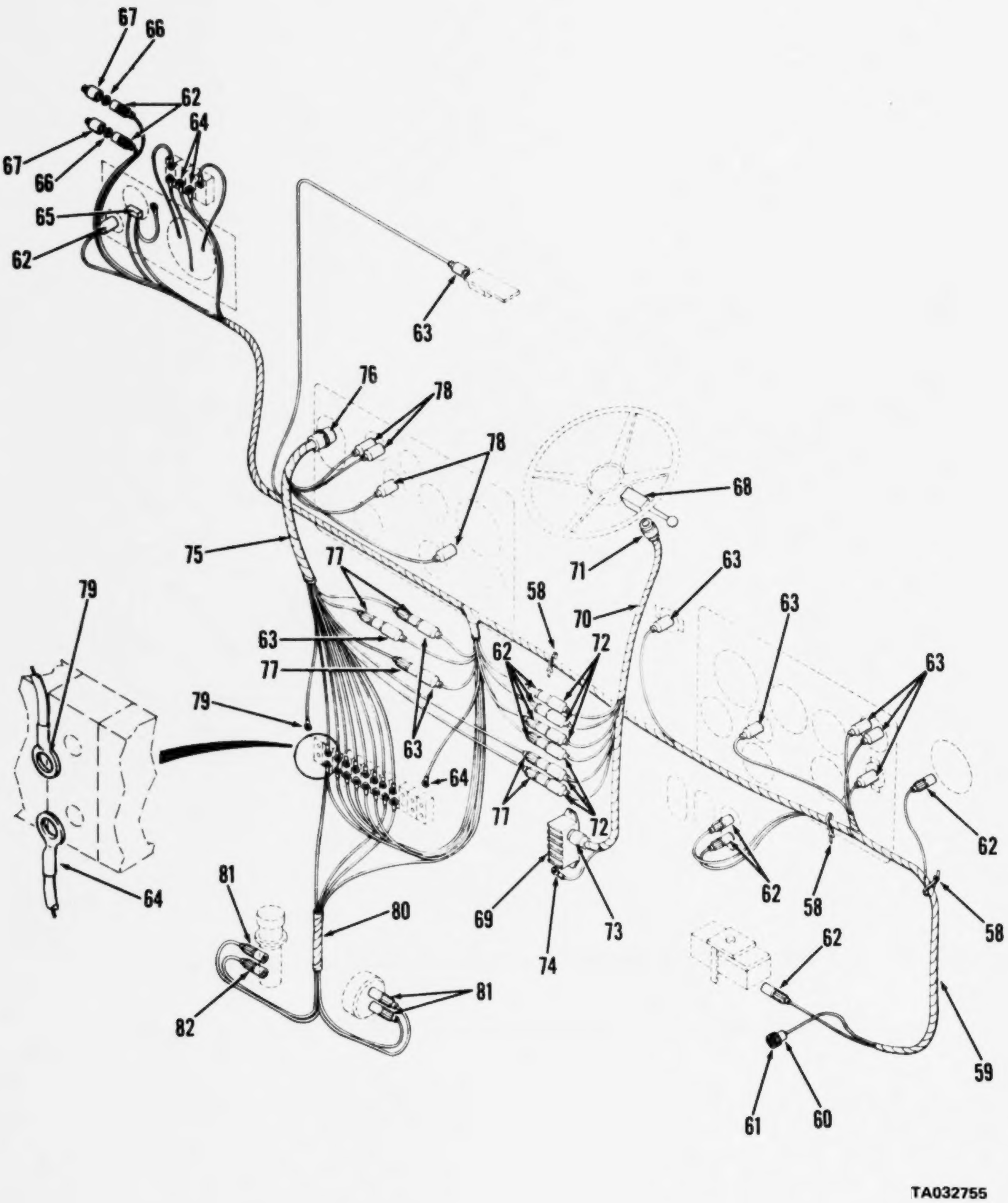

Figure 111. Wiring assemblies, harnesses and related parts (Sheet 2 of 5)

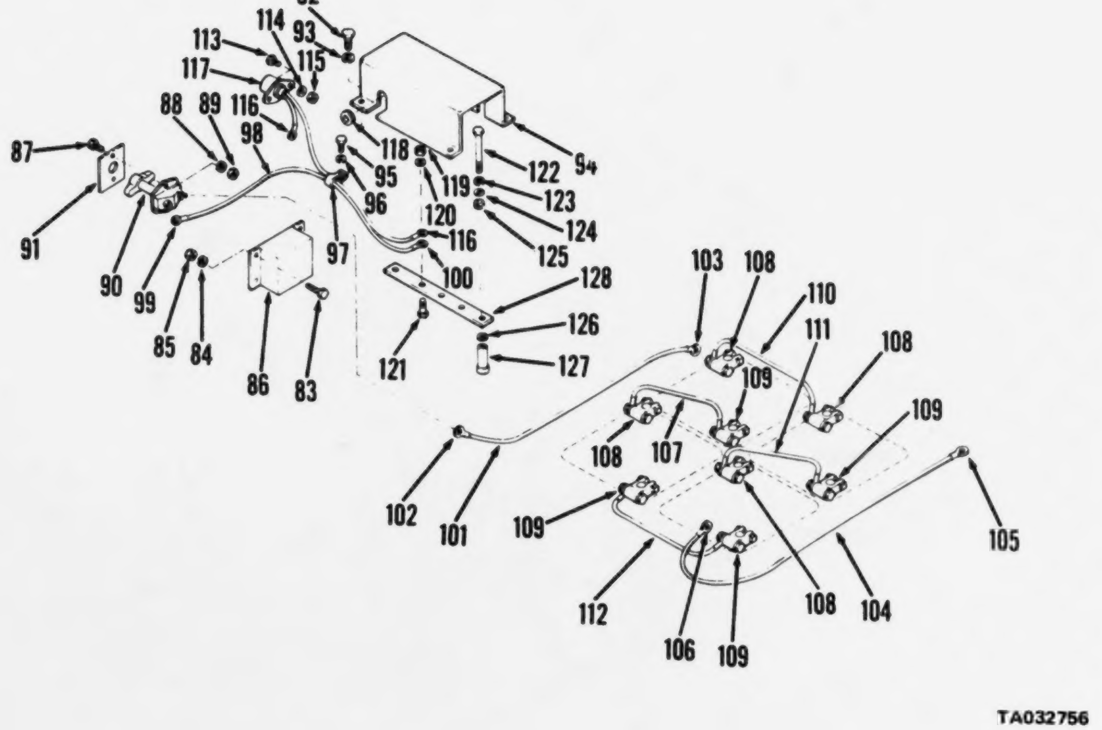

Figure 111. Wiring assemblies, harnesses and related parts (Sheet 3 of 5)

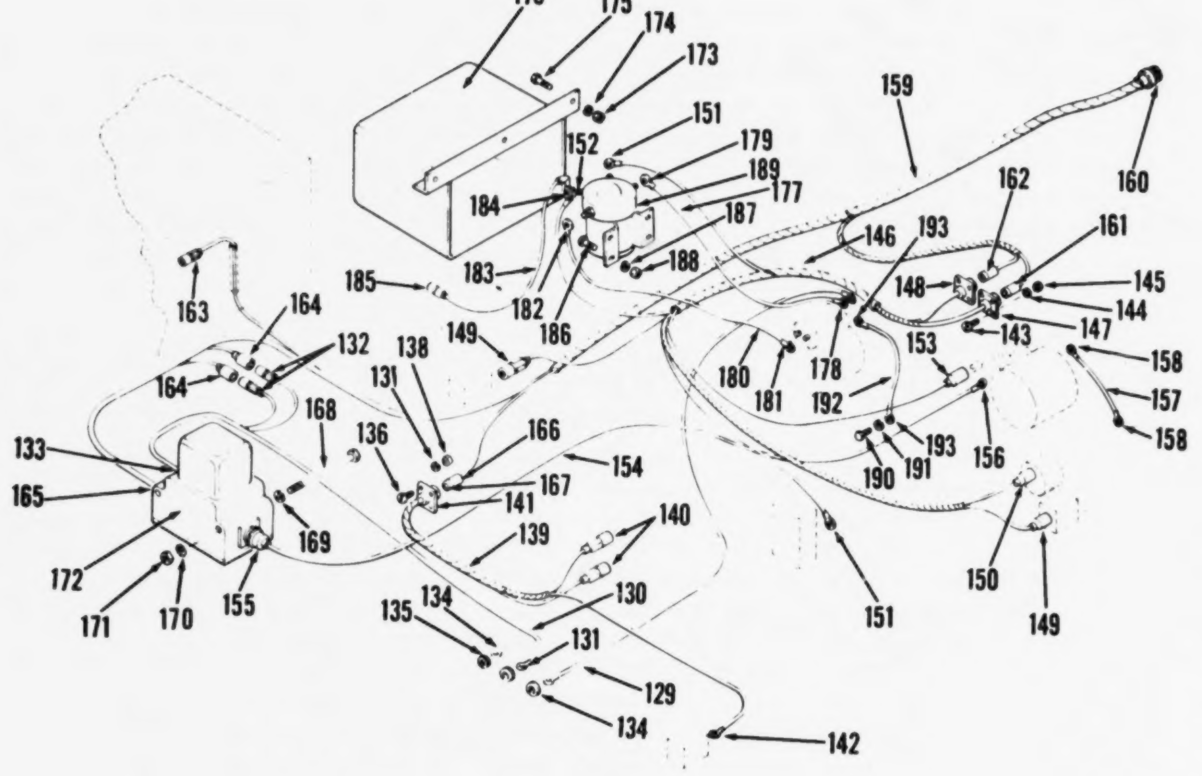

Figure 111. Wiring assemblies, harnesses and related parts (Sheet 4 of 5)

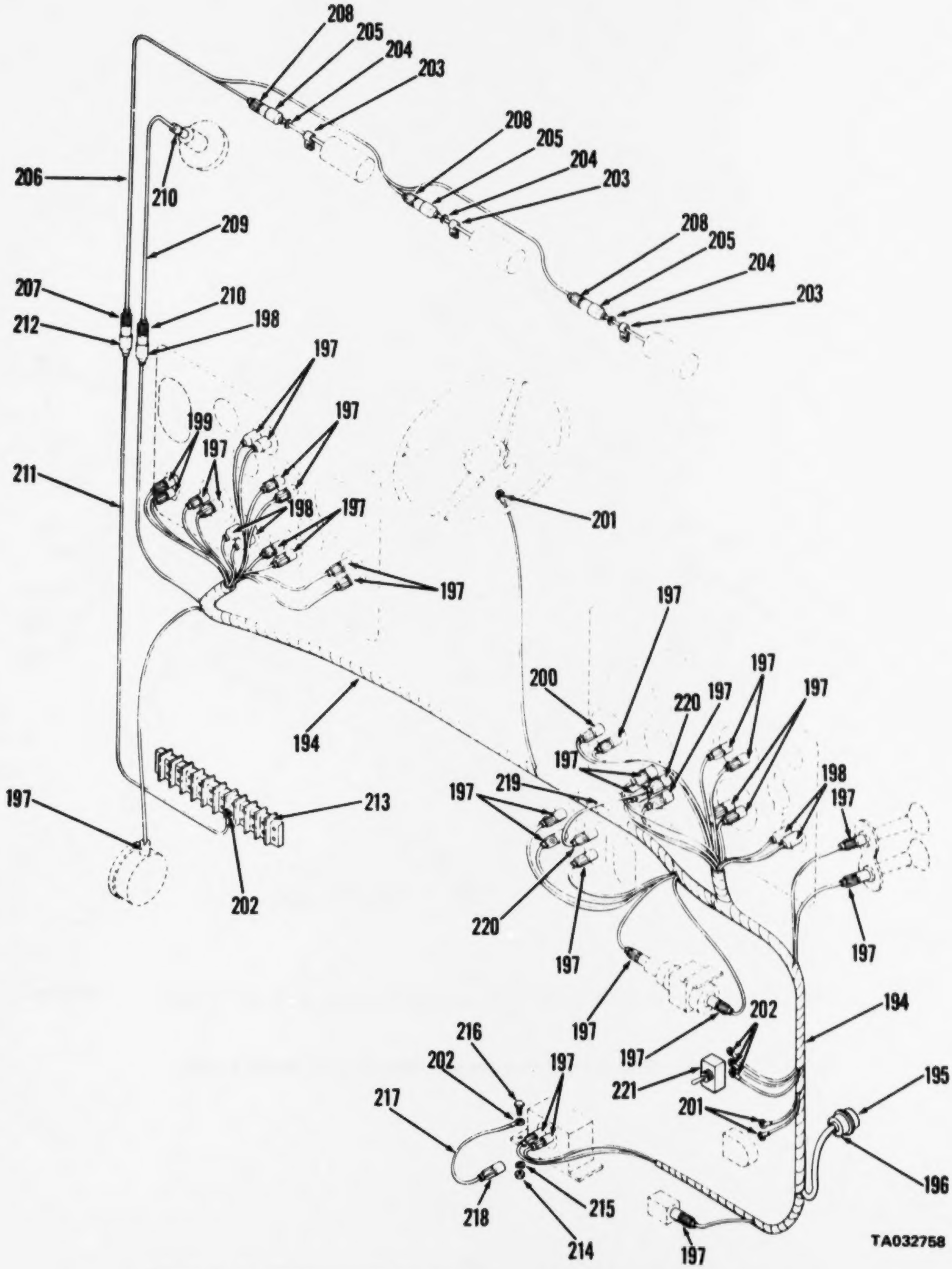

Figure 111. Wiring assemblies, harnesses and related parts (Sheet 5 of 5)

(1) ILLUSTRATION (a) FIG NO.	(b) ITEM NO.	(2) SMR CODE	(3) NATIONAL STOCK NUMBER	(4) PART NUMBER	(5) FSCM	(6) DESCRIPTION USABLE ON CODE	(7) U/M	(8) QTY INC IN UNIT
						PART 2 CARRIER		
						FUNCTIONAL GROUP 43 WIRING SYSTEM,CARRIER		
111	1	XDOZZ	5305-00-225-3839	MS90725-8	96906	.SCREW CAP HEXAGON 1-4-20X1 COVER MTG........................	EA	4
111	2	PAOZZ	5310-00-582-5965	MS35338-44	96906	.WASHER,LOCK 1-4 COVER MTG....................................	EA	4
111	3	XDOZZ	5310-00-761-6882	MS51967-2	96906	.NUT,PLAIN,HEXAGON 1-4-20 COVER MTG..........................	EA	4
111	4	XDOZZ	5935-00-773-1428	60-36357-28	77820	.COVER WIRING HARN..	EA	1
111	5	PAOZZ	5325-01-024-9880	20059	27315	.NUT SPECIAL 57 28 GROMMET RTNG..............................	EA	1
111	6	PCOZZ		20U27	27315	.GROMMET ELECTRICAL WIRING HARNESS...........................	EA	1
111	7	XDOZZ	5305-01-019-2426	MS51850-27	96906	.SCREW TAPPING HEX NO 6-20X7-8 GRD CONNECTION...............	EA	1
111	8	PAOZZ	5310-00-833-8567	13212E4473	97403	.RETAINER TERMINAL TAILLIGHT WIRE RTNG.......................	EA	2
111	9	PAOZZ	5935-00-572-9180	13212E4472-1	97403	.SHELL ELECTRICAL CO TAILLIGHT WIRE CONNECTION...............	EA	2
111	10	MOOFZ	2590-00-248-3286	13213E9207	97403	.WIRING ASSEMBLY: TAILLIGHTS,RIGHT............................	EA	1
111	11	PAOZZ	5935-01-026-5865	9724229	19207	..CONNECTOR PLUG TAILLIGHT WIRING ASSY........................	EA	1
111	12	PAOZZ	5935-00-167-7775	MS27144-1	96906	..CONNECTOR,PLUG,ELEC RIGHT REAR TAILLIGHTWIRING ASSY........	EA	2
111	13	PAOZZ	6220-00-116-3605	PL3	13548	..PLUG,LAMP RIGHT REAR TAILLIGHT WIRING.......................	EA	1
111	14	XDOZZ	5305-01-019-2426	MS51850-27	96906	.SCREW,TAPPING,HEX NO 6-20X7-8 GRD CONNECTION...............	EA	1
111	15	PAOZZ	5310-00-833-8567	13212E4473	97403	.RETAINER ELECTRICAL TAILLIGHT WIRING ASSY...................	EA	2
111	16	PAOZZ	5935-00-572-9180	13212E4472-1	97403	.SHELL ELECTRICAL CO TAILLIGHT WIRE CONNECTION...............	EA	2
111	17	MOOFZ		13213E9213	97403	.WIRING ASSEMBLY TAILLIGHTS-LEFT.............................	EA	1
111	18	PAOZZ		13217E6705-175	97403	..CONNECTOR TAILLIGHT WIRING ASSY-LEFT.......................	EA	1
111	19	PAOZZ	6220-00-116-3605	PL3	13548	.CABLE ASSEMBLY LEFT REAR TAILLIGHT WIRING ASSY..............	EA	1
111	20	PAOZZ	5935-00-167-7775	MS27144-1	96906	..CONNECTOR,PLUG,ELEC LEFT REAR TAILLIGHTSWIRING ASSY........	EA	2
111	21	XDOZZ	5305-00-989-3000	MS35206-230	96906	.SCREW MACHINE NO 6-32X1-2 CABLE MTG.........................	EA	8
111	22	PAOZZ	5310-00-045-4007	MS35338-41	96906	.WASHER LOCK NO 6 CABLE MTG..................................	EA	8
111	23	XDOZZ	5310-00-934-9747	MS35649-262	96906	.NUT,PLAIN,HEXAGON NO 6-32 CABLE MTG.........................	EA	8
111	24	XDOZZ		SST4H	06383	.STRAP TIE DOWN CABLE INSTALLATION...........................	EA	2
111	25	XBOZZ		MS35206-263	96906	.SCREW,MACHINE,10-24 X 1-2,CLAMP MOUNTING....................	EA	2
111	26	XDOZZ	5310-00-045-3296	MS35338-43	96906	.WASHER,LOCK NO 10 CLAMP MTG.................................	EA	2
111	27	XDOZZ	5340-00-921-6993	MS21334-32	96906	.CLAMP LOOP CABLE INSTALL.....................................	EA	2
111	28	XDOZZ	5340-00-925-1794	MS21334-31	96906	.CLAMP LOOP CABLE INSTALLATION................................	EA	2
111	29	XDOZZ	5305-00-889-3000	MS35206-230	96906	.SCREW MACHINE NO 6-32X1-2 CABLE MTG.........................	EA	4
111	30	XDOZZ	5310-00-045-4007	MS35338-41	96906	.WASHER LOCK NO 6 CABLE MTG...................................	EA	4
111	31	XDOZZ	5310-00-934-9747	MS35649-262	96906	.NUT PLAIN HEXAGON NO 6-32 CABLE MTG..........................	EA	4
111	32	PCOZZ	5325-00-270-8889	MS35489-81	96906	.GROMMET,RUBBER WIRING HARNESS TO RIGHT HDLGHTS..............	EA	2
111	33	XDOZZ	5305-00-984-6212	MS35206-265	96906	.SCREW,MACHINE NO 10-24X3-4 LOOP CLMP MTG....................	EA	3
111	34	XDOZZ	5310-00-045-3296	MS35338-43	96906	.WASHER,LOCK NO 10 LOOP CLMP MTG.............................	EA	3
111	35	XDOZZ	5340-00-050-2740	MS21333-75	96906	.CLAMP LOOP STEEL 3-4 NOM DIA CABLE RTNG.....................	EA	3
111	36	XBOZZ		MS90725-3	96906	.SCREW,CAP,HEX HD: 1-4-20 X 1-2,LOOP CLAMP MTG...............	EA	1
111	37	XDOZZ	5310-00-592-5965	MS35338-44	96906	.WASHER,LOCK 1-4 LOOP CLAMP MTG..............................	EA	1
111	38	XDOZZ	5340-00-809-1494	MS21333-105	96906	.CLAMP LOOP STEEL WIRING HARNESS RTNG........................	EA	1

(1) ILLUSTRATION (a) FIG NO.	(b) ITEM NO.	(2) SMR CODE	(3) NATIONAL STOCK NUMBER	(4) PART NUMBER	(5) FSCM	(6) DESCRIPTION USABLE ON CODE	(7) U/M	(8) QTY INC IN UNIT
111	39	PAOZZ	5310-00-833-8567	13212E4473	97403	.RETAINER TERMINAL HEADLIGHT WIRE HARNESS..................	EA	2
111	40	PAOZZ	5935-00-572-9180	13212E4472-1	97403	.SHELL ELECTRICAL CO HEADLIGHT WIRE ASSY..................	EA	2
111	41	PBOFF	2590-00-248-3275	13213E9212	97403	.WIRIAG HARNESS TRAILER RECEPTACLE..........................	EA	1
111	42	PAOZZ	5935-00-167-7775	MS27144-1	96906	..CONNECTOR,PLUG,ELEC TRAILER RECEPTACLE..................	EA	3
111	43	PAOZZ	6220-00-116-3609	13215E7621	97403	..PLUG,ELECTRICAL TRAILER RECEPTACLE......	EA	1
111	44	PAOZZ	5940-00-705-6711	7056711	19207	..TERMINAL LUG TRAILER RECEPTACLE WIRING..................	EA	3
111	45	PAOZZ	5935-00-565-9503	MS25251-12	96906	..PLUG,END SEAL,ELECT ELEC CONNECTOR......................	EA	1
111	46	PAOZZ	5935-00-686-2599	8724258	19207		EA	1
111	47	XDOZZ	5935-00-137-4671	MS25043-14D	96906	..COVER CONNECTOR WIRING HARNESS..........................	EA	1
111	48	PAOZZ	5935-00-846-4236	7720486	19207	..CONNECTOR TRAILER RECEP WIRING HARNESS..................	EA	1
111	49	PAOZZ		13217E6707-17P	97403	..CONNECTOR 4 PIN CONTACT TRAILER.........................	EA	2
111	50	PAOZZ	5940-00-705-6709	7056709	19207	..TERMINAL LUG TRAILER RECEPTACLE WIRING..................	EA	1
111	51	PAOZZ	5935-00-565-9503	MS25251-12	96906	..PLUG,END SEAL,ELECT TRAILER RECEPTACLE..................	EA	1
111	52	PAOZZ	5310-00-793-6685	7723309	19207	..NUT CONNECTOR GROMMET RETAINING.........................	EA	1
111	53	PCOZZ	5365-00-090-5426	7722333	19207	..BUSHING,RUBBER ELECTRICAL CONNECTOR.....................	EA	1
111	54	PAOZZ	5935-00-846-3884	MS75021-2	96906	..CONNECTOR RECEPTACL TRAILER RECEPTACLE..................	EA	1
111	55	XDOZZ	5305-00-984-6193	MS35206-245	96906	.SCREW MACHINE 8-32X1-2 WIRING HARNESS CONNECTOR MTG.......	EA	4
111	56	XDOZZ	5310-00-045-3299	MS35338-42	96906	.WASHER,LOCK NO 8 WIRING HARNESS CONNECTOR MTG............	EA	4
111	57	XDOZZ	5310-00-934-9757	MS35649-282	96906	.NUT,PLAIN,HEXAGON NO 8-32 WIRING HARNESS CONNECTOR MTG.....	EA	2
111	58	XDOZZ		SST4H	06853	.STRAP TIE DOWN CABLE INSTALLATION........................	EA	2
111	60	PAOZZ	5935-00-565-9503	MS25251-12	96906	..PLUG,END,SEAL,ELECT END SEAL CARRIER.....................	EA	1
111	61	PAOZZ	5935-00-771-6793	7716793	19207	..CONNECTOR CARRIER LIGHTING...............................	EA	1
111	62	PAOZZ	5935-00-167-7775	MS27144-1	96906	..CONNECTOR,PLUG,ELEC CARRIER LIGHTING....................	EA	13
111	63	PAOZZ	5935-00-462-6603	MS27142-2	96906	..CONNECTOR,PLUG,ELEC CARRIER LIGHTING....................	EA	8
111	64	PAOZZ	5940-00-150-4473	7056702	19207	..TERMINAL LUG CARRIER LIGHTING WIRING....................	EA	10
111	65	PAOZZ	6220-00-116-3609	13215E7621	97403	.PLUG,ELECTRICAL CARRIER LIGHTING WIRING HARNESS...........	EA	1
111	66	PAOZZ	5310-00-833-8567	13212E4473	97403	.RETAINER TERMINAL HEADLIGHT WIRING CONNECTION.............	EA	2
111	67	PAOZZ	5935-00-572-9180	13212E4472-1	97403	.SHELL ELECTRICAL CO HEADLIGHT WIRING CONNECTION...........	EA	2
111	68	XDOZZ		MS62069/1-2	96906	.CONTROL DIRECT SIGNAL AND HAZARD.........................	EA	1
111	69	XDOZZ		MS62069/2-1	96906	.CONTROL DIRECT FLASHER UNIT..............................	EA	1
111	71	XDOZZ		MS25183-18-85	96906	..CONNECTOR PLUG SIGNAL CONTROL...........................	EA	1
111	72	PAOZZ	5935-00-115-2306	MS27142-3	96906	..CONNECTOR,PLUG SIGNAL LIGHT CONTROL.....................	EA	6
111	73	XDOZZ		MS25183-16-109	96906	..CONNECTOR PLUG SIGNAL LIGHT CONTROL.....................	EA	1
111	74	PAOZZ	5940-00-705-6709	7056709	19207	..TERMINAL LUG DIRECTION SIGNAL CONTROL...................	EA	1
111	75	PAOZZ	2590-01-024-1535	79U572	27315	.HARNESS WIRING LIGHT SWITCH..............................	EA	1
111	76	XDOZZ		13217E6705-285	97403	..CONNECTOR LIGHT SWITCH HARNESS..........................	EA	1
111	77	PAOZZ	5935-00-167-7775	MS27144-1	96906	..CONNECTOR,PLUG,ELEC LIGHT SWITCH HARNESS................	EA	5
111	78	PAOZZ	5935-00-462-6603	MS27142-2	96906	..CONNECTOR,PLUG,ELEC LIGHT SWITCH HARNESS................	EA	4
111	79	PAOZZ	5940-00-705-6707	7056707	19207	..TERMINAL LUG LIGHT SWITCH HARNESS.......................	EA	9
111	80	MOOFZ		79Q314	27315	.WIRING HARNESS: STOP LIGHT AND DIMMER SWITCH................	EA	1

(1) ILLUSTRATION (a) FIG NO.	(b) ITEM NO.	(2) SMR CODE	(3) NATIONAL STOCK NUMBER	(4) PART NUMBER	(5) FSCM	(6) DESCRIPTION USABLE ON CODE	(7) U/M	(8) QTY INC IN UNIT
111	81	PAOZZ	5935-00-167-7775	MS27144-1	96906	..CONNECTOR,PLUG,ELEC STOP LIGHT	EA	4
111	82	PAOZZ	5935-00-184-6707	MS27144-3	96906	..CONNECTOR,PLUG STOP LIGHT AND DIMMER	EA	1
111	83	XBOZZ		MS90725-6	96906	.SCREW,CAP,HEX HD: 1-4-20 X 3-4,SWITCH COVER MTG	EA	4
111	84	XDOZZ	5310-00-582-5965	MS35338-44	96906	.WASHER,LOCK 1-4 SWITCH COVER MTG	EA	4
111	85	XDOZZ	5310-00-505-0762	MS51967-3	96906	.NUT PLAIN HEXEGON 1-4-20 SWITCH COVER MTG	EA	4
111	86	XDOZZ		814P21	27315	.COVER SWITCH PULL SW PROTECTION	EA	1
111	87	XDOZZ	5305-00-225-3839	MS90725-8	96906	.SCREW CAP HEXAGON 1-4-20X1 SWITCH MOUNTING	EA	2
111	88	XDOZZ	5310-00-582-5965	MS35338-44	96906	.WASHER,LOCK 1-4 SWITCH MTG	EA	2
111	89	XDOZZ	5310-00-505-0762	MS51967-3	96906	.NUT PLAIN HEXAGON 1-4-20 SWITCH MTG	EA	2
111	90	PAOZZ	5930-00-930-5016	MS27230-1	96906	.SWITCH,PULL SPST 24VDC BATTERY DISCONNECT	EA	1
111	91	XBOZZ		13218E9290	97403	.PLATE,INSTRUCTION BATTERY DISCONNECT SWITCH	EA	1
111	92	XBOZZ		MS90725-3	96906	.SCREW,CAP,HEX HD: 1-4-20 X 1-2,BUS BAR COVE	EA	4
111	93	XDOZZ	5310-00-045-4007	MS35338-41	96906	.WASHER,LOCK 1-4 BUS BAR COVER MTG	EA	4
111	94	XDOZZ		914P25	27315	.GUARD BUS BAR BUS BAR COVER	EA	1
111	95	XBOZZ		MS35204-263	96906	.SCREW,MACHINE: 10-24 X 1-2,LOOP CLAMP MTG	EA	1
111	96	XDOZZ	5310-00-045-3296	MS35338-43	96906	.WASHER,LOCK NO 10 LOOP CLAMP MTG	EA	1
111	97	XDOZZ	5340-00-929-1794	MS21334-31	96906	.CLAMP,LOOP 11-16 NOM DIA WIRE RTNG	EA	1
111	98	PAOZZ	2590-00-248-3486	13215E7622-21	97403	.LEAD,ELECTRICAL BAT DISC SW TO BUS BAR 62IN LG HD SINGLE CONDUCTOR CABLE	EA	1
111	99	PAOZZ		13217E6704-16	97403	..TERMINAL,ELECTRICAL BAT DISC TO BUS BAR LEAD	EA	1
111	100	PAOZZ	5940-00-705-6732	13217E6704-35	97403	..TERMINAL LUG BAT DISC TO BUS BAR LEAD	PG	1
111	101	PAOZZ	2590-00-248-3463	13215E7622-15	97403	.LEAD,ELECTRICAL BAT DISC SW TO BATTERY	EA	1
111	102	PAOZZ	5940-00-705-6732	7056732	19207	..TERMINAL LUG BAT DISC SW TO BAT LEAD	EA	2
111	103	PAOZZ	5940-00-549-6581	MS75004-1	96906	..ADAPTER BAT DISC SW TO BAT LEAD	EA	1
111	104	PAOZZ	2590-00-249-3474	13215E7622-14	97403	.LEAD,ELECTRICAL BAT TO GRD	EA	1
111	105	PAOZZ	5940-00-735-5520	7355520	19207	..TERMINAL LUG BAT TO GRD LEAD	EA	1
111	106	PAOZZ		7056715	19207	..TERMINAL LUG BAT TO GRD LEAD	EA	1
111	107	PAOZZ	2590-00-248-3457	13215E7622-16	97403	.LEAD,ELECTRICAL BAT1 TO BAT2	EA	1
111	108	PAOZZ	5940-00-549-6581	MS75004-1	96906	..ADAPTER BATTERYTERM POSITIVE BATTERY	EA	4
111	109	PAOZZ	5940-00-549-6583	MS75004-2	96906	..ADAPTER BATTERYTERM NEG BAT TERMINAL	EA	4
111	110	PAOZZ	2590-00-249-3404	13215E7622-19	97403	.LEAD,ELECTRICAL BAT 1 TO BAT 3	EA	1
111		PAOZZ	5940-00-549-6581	MS75004-1	96906	..ADAPTER,BATTERY TER POSITIVE	EA	2
111	111	PAOZZ	2590-00-248-3466	13215E7622-17	97403	.LEAD,ELECTRICAL POS BAT4 TO NEG BAT3	EA	1
111		PAOZZ	5940-00-549-6581	MS75004-1	96906	..ADAPTER,BATTERY TER POSITIVE	EA	1
111		PAOZZ	5940-00-549-6583	MS75004-2	96906	..ADAPTER,BATTERY TER NEGATIVE	EA	1
111	112	PAOZZ	2590-00-248-3607	13215E7622-18	97403	.LEAD,ELECTRICAL BAT2 TO BAT 4 NEG LEAD	EA	1
111		PAOZZ	5940-00-549-6583	MS75004-2	96906	..ADAPTER,BATTERY TER NEGATIVE	EA	2
111	113	XDOZZ	5305-00-225-3838	MS90725-4	96906	.SCREW,CAP,HEXAGON 1-4-20X9-16 RECPTACLE MTG	EA	4

(1) ILLUSTRATION		(2)	(3)	(4)	(5)	(6)	(7)	(8)
(a) FIG NO.	(b) ITEM NO.	SMR CODE	NATIONAL STOCK NUMBER	PART NUMBER	FSCM	DESCRIPTION USABLE ON CODE	U/M	QTY INC IN UNIT
111	114	XDOZZ	5310-00-045-4007	MS35338-41	96906	.WASHER,LOCK 1-4 SLAVE RECP MTG..............................	EA	4
111	115	XDOZZ	5310-00-905-0762	MS51967-3	96906	.NUT PLAIN HEXAGON 1-4-20 SLAVE RECP MTG.................	EA	4
111		BOZZ	2590-00-248-3333	13213E5450	97403	.RECEPTACLE SLAVE UNIT..	EA	1
111	116	PAOZZ	5940-00-705-6732	13217E6704-35	97403	..TERMINAL LUG SLAVE RECEPTACLE.............................	EA	2
111	117	PAOZZ	5935-00-295-6409	MS75058-1	96906	..CONNECTOR ELEC-SLAVE 2 CONTACT 24 VOLT...................	EA	1
111	118	PCOZZ	5325-00-285-3345	MS35489-56	96906	.GROMMET,RUBBER 1-2 BUS BAR COVER..........................	EA	1
111	119	XDOZZ	5310-00-903-3994	MS51969-3	96906	..NUT,PLAIN,HEXAGON 3-8-16 BUS BAR...........................	EA	3
111	120	XDOZZ	5310-00-953-8628	MS45904-77	96906	..WASHER,LOCK INT-EXT 3-8 BUS BAR TERMINAL..................	EA	3
111	121	XDOZZ	5305-00-543-4718	MS35309-358	96906	..SCREW,CAP,HEXAGON 3-8-16X3-4 BRASS-BUS.....................	EA	3
111	122	XDOZZ	5305-00-071-2235	MS90725-16	96906	..SCREW,CAP,HEXAGON 1-4-20X2-1-2 BUS BAR	EA	2
111	123	XDOZZ	5310-00-582-5965	MS35338-44	96906	..WASHER,LOCK 1-4 BUS BAR MTG................................	EA	2
111	124	XDOZZ	5310-00-809-4058	MS27183-10	96906	..WASHER FLAT 0.281 BUS BAR MTG..............................	EA	2
111	125	PCOZZ	5325-00-270-8889	MS35489-81	96906	..GROMMET,RUBBER BUS BAR PLATE...............................	EA	2
111	126	XDOZZ	5310-00-809-4061	MS27183-15	96906	..WASHER,FLAT NOM ID 0.438 BUS BAR MTG......................	EA	2
111	127	XDOZZ		8187613	27315	..SPACER BUS BAR BUS BAR ASSY................................	EA	2
111	134	PCOZZ	5325-00-185-0001	MS35489-465	96906	.GROMMET RUBBER 3-8 ELECTRICAL LEADS.........................	EA	2
111	135	PCOZZ	5325-00-174-9322	MS35489-34	96906	.GROMMET,RUBBER 1-4 ELECTRICAL LEAD..........................	EA	1
111	136	XDOZZ	5305-00-984-6193	MS35206-245	96906	.SCREW MACHINE NO 8-32X1-2 WIRING HARNESS MTG...............	EA	4
111	137	XDOZZ	5310-00-045-3299	MS35338-42	96906	.WASHER,LOCK NO 8 WIRING HARNESS MTG.........................	EA	4
111	138	XDOZZ	5310-00-934-9757	MS35649-282	96906	.NUT,PLAIN,HEXAGON NO 8-32 WIRING HARNESS MTG...............	EA	4
111	143	XDOZZ	5305-00-889-3000	MS35206-230	96906	.SCREW MACHINE NO 6-32X1-2 ENGINE WIRING HARNESS............	EA	8
111	144	XDOZZ	5310-00-045-4007	MS35338-41	96906	.WASHER LOCK NO 6 ENG WIRING HARNESS........................	EA	8
111	145	XDOZZ	5310-00-934-9747	MS35649-262	96906	.NUT,PLAIN,HEXAGON NO 6-32 ENGINE WIRING HARNESS............	EA	8
111	150	XDOZZ	5940-00-705-6708	7056708	19207	..TERMINAL LUG ENG TRANSDUCER WIRING.........................	EA	2
111	165	PAOZZ	5935-00-686-2610	8724159	19207	..CONNECTOR PLUG ENG CKT WIRING HARNESS......................	EA	1
111	166	XDOZZ	5935-00-565-9503	MS25251-12	96906	..PLUG END SEAL ENG CKT WIRING HARNESS.......................	EA	2
111	168	XDOZZ	5306-00-225-8512	MS90725-48	96906	.BOLT,MACHINE 5-16-18X4 RELAY MTG............................	EA	2
111	169	XDOZZ	5310-00-407-9566	MS35338-45	96906	.WASHER,LOCK 5-16 RELAY MTG..................................	EA	2
111	170	XDOZZ	5310-00-914-6674	MS35335-34	96906	.WASHER,LOCK 5-16 RELAY MTG..................................	EA	2
111	171	XDOZZ	5310-00-931-8167	MS51967-8	96906	.NUT PLAIN HEXAGON 5-16-18 RELAY MTG.........................	EA	2
111	186	XBOZZ		MS90725-6	96906	.SCREW,CAP,HEX HD: 1-4-20 X 3-4,SWITCH MTG..................	EA	4
111	187	XDOZZ	5310-00-045-4007	MS35338-41	96906	.WASHER,LOCK 1-4 MAGNETIC SWITCH MTG.........................	EA	4
111	188	XDOZZ	5310-00-761-6882	MS51967-2	96906	.NUT,PLAIN,HEXAGON 1-4-20 MAGNETIC SWITCH MTG...............	EA	4
111	189	PAOZZ	2920-00-351-9657	1119870	16764	.RELAY,SOLENOID ELECTRICAL GENERATING SYSTEM................	EA	1
111	190	XDOZZ	5305-00-071-1765	MS90725-106	96906	.SCREW CAP HEXAGON 1-2-13X5-8 GRD LEAD MTG...................	EA	1
111	191	XDOZZ	5310-00-584-5272	MS35338-48	96906	.WASHER,LOCK 1-2 GRD LEAD MTG................................	EA	1
111	195	XDOZZ		13217E6707-30P	97403	..CONNECTOR CAB WIRING HARNESS...............................	EA	1
111	196	PAOZZ	5340-00-823-5322	MS25251-16	96906	..PLUG,PROTECTIVEDUST CAB WIRING HARNESS.....................	EA	2
111	197	PAOZZ	5935-00-167-7775	MS27144-1	96906	..CONNECTOR,PLUG,ELEC CAB WIRING HARNESS.....................	EA	26
111	198	PAOZZ	5935-00-462-6603	MS27142-2	96906	..CONNECTOR,PLUG CAB WIRING HARNESS..........................	EA	7
111	199	XDOZZ	5935-00-767-7936	MS27145-1	96906	..CONNECTOR PLUG CAB WIRING HARNESS..........................	EA	2

(1) ILLUSTRATION		(2)	(3)	(4)	(5)	(6)	(7)	(8)
(a) FIG NO.	(b) ITEM NO.	SMR CODE	NATIONAL STOCK NUMBER	PART NUMBER	FSCM	DESCRIPTION USABLE ON CODE	U/M	QTY INC IN UNIT
111	200	PAOZZ	5935-00-115-2307	MS27144-2	96906	..CONNECTOR,PLUG CAB WIRING HARNESS........................	EA	1
111	201	PAOZZ	5940-00-705-6700	7056700	19207	..TERMINAL,LUG CAB WIRING HARNESS..........................	EA	3
111	202	XDOZZ	5940-00-705-6707	13217E6704-8	97403	..TERMINAL LUG CAB WIRING HARNESS..........................	EA	3
111	203	XDOZZ	5340-00-905-0790	MS21333-65	96906	.CLAMP LOOP CAB WIRING......................................	EA	3
111	204	PAOZZ	5310-00-833-8567	13212E4473	97403	.WASHER,SLOTTED CAB WIRING..................................	EA	3
111	205	XDOZZ		7922447	27315	.SHELL SINGLE FEMALE CAB WIRING.............................	EA	3
111	206	PAOZZ	2590-00-248-3332	13213E9441	97403	.LEAD,ELECTRICAL ELECTRICAL CLEARANCE LIGHTS................	EA	1
111	207	PAOZZ	5935-00-462-6603	MS27142-2	96906	..CONNECTOR,PLUG,ELEC ELECTRICAL CLEARANCELIGHTS............	EA	1
111	208	PAOZZ	5935-00-167-7775	MS27144-1	96906	..CONNECTOR,PLUG,ELEC ELECTRICAL CLEARANCELIGHTS............	EA	3
111	209	PAOZZ	2590-01-036-0785	79U563-D3	27315	.LEAD ELECTRICAL CAB WIRING.................................	EA	1
111	210	PAOZZ	5935-00-167-7775	MS27144-1	96906	..CONNECTOR,PLUG,ELEC ELECTRICAL LEAD.......................	EA	2
111	211	PAOZZ		79U563-D8	27315	.LEAD,ELECTRICAL: CAB WIRING................................	EA	1
111	212	PAOZZ	5935-00-167-7775	MS27144-1	96906	..CONNECTOR,PLUG,ELEC ELECTRICAL LEAD.......................	EA	1
111	213	XDOZZ	5940-00-983-6105	MILT55164-39T810	81349	.BOARD TERMINAL CAB WIRING..................................	EA	1
111	214	XDOZZ	5310-00-934-9747	MS35649-262	96906	.NUT,PLAIN,HEXAGON FUSE HOLDER MTG..........................	EA	1
111	215	PAOZZ	5310-00-045-4007	MS35338-41	96906	.WASHER LOCK FUSE HOLDER MTG................................	EA	1
111	216	XDOZZ	5305-00-889-3000	MS35206-230	96906	.SCREW MACHINE FUSE HOLDER MTG..............................	EA	1
111	217	PAOZZ	2590-00-248-3276	13215E7622-23	97403	..LEAD,ELECTRICAL CAB WIRING................................	EA	1
111	218	PAOZZ	5935-00-167-7775	MS27144-1	96906	..CONNECTOR,PLUG,ELEC CAB WIRING............................	EA	1
111	219	XDOZZ		13215E7622-32	97403	..LEAD ELECTRICAL CAB WIRING................................	EA	1
111	220	PAOZZ	5935-00-167-7775	MS27144-1	96906	..CONNECTOR PLUG CAB WIRING..................................	EA	2
111	221	PAOZZ	5930-00-655-1518	MS35058-27	96906	.SWITCH TOGGLE CAB WIRING...................................	EA	1

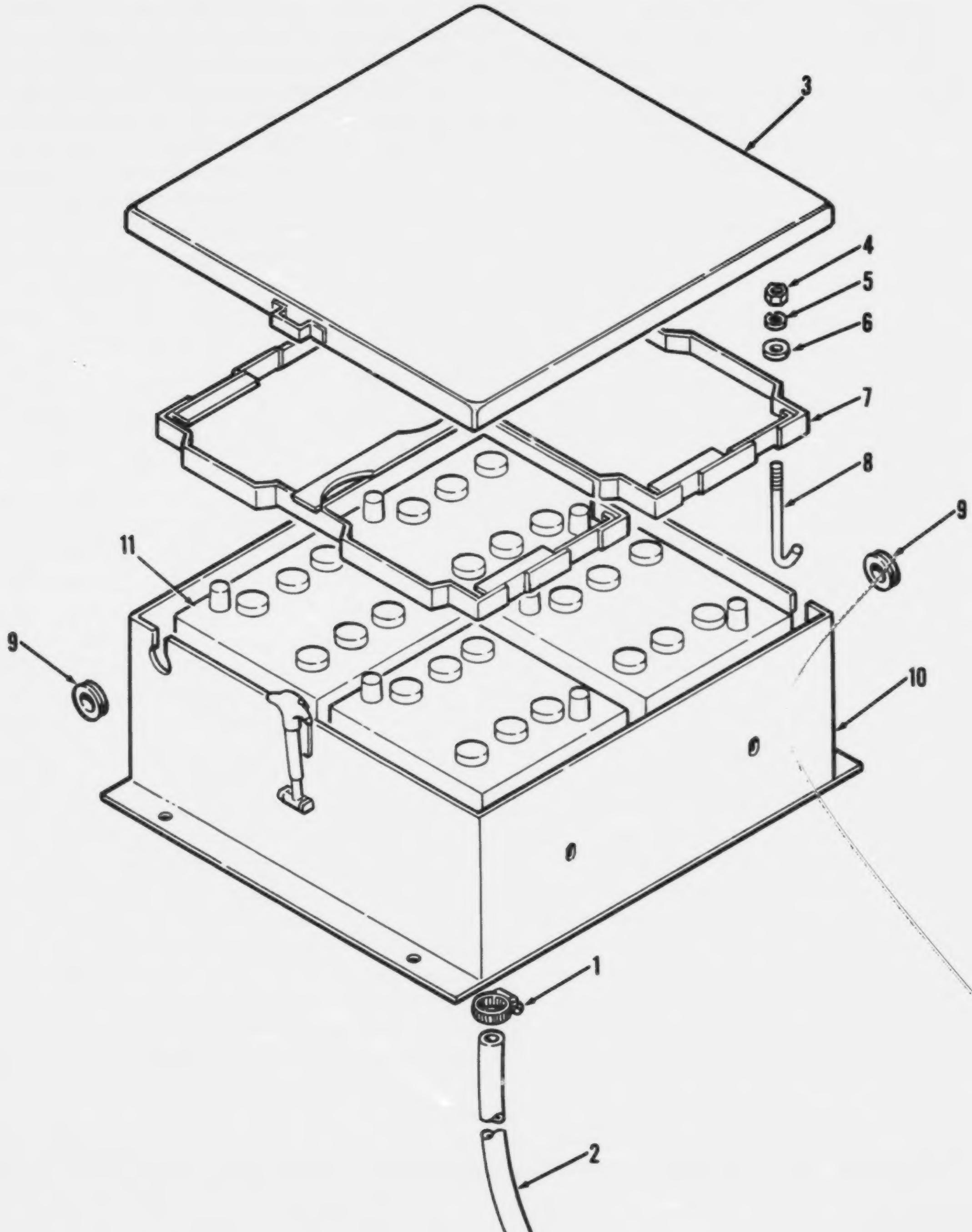

Figure 112. Battery and battery case assembly

(1) ILLUSTRATION (a) FIG NO.	(b) ITEM NO.	(2) SMR CODE	(3) NATIONAL STOCK NUMBER	(4) PART NUMBER	(5) FSCM	(6) DESCRIPTION USABLE ON CODE	(7) U/M	(8) QTY INC IN UNIT
						FUNCTIONAL GROUP 43 WIRING SYSTEM,CARRIER		
112		XDOZZ		14U90	27315	.BATTERY CASE CARRIER BATTERY ASSY...........................	EA	1
112	1	PAOZZ	4730-00-908-3194	MS35842-11	96906	..CLAMP HOSE BATTERY CASE DRAIN..............................	EA	1
112	2	XDOZZ	4720-01-055-6987	13218E0001-302	97403	..HOSE,PREFORMED BATTERY CASE DRAIN..........................	FT	1
112	3	XDOZZ		13213E5216	97403	..COVER BATTERY BATTERY CASE.................................	EA	1
112	4	XDOZZ	5310-00-080-8495	MS35425-35	96906	..NUT PLAIN WING BATTERY RETAINER............................	EA	4
112	5	XDOZZ	5310-00-582-5965	MS35338-44	96906	..WASHER,LOCK BATTERY RETAINER HOLD DOWN.....................	EA	4
112	6	XDOZZ	5310-00-823-8804	MS27183-9	96906	..WASHER FLAT BATTERY RETAINER HOLD DOWN.....................	EA	4
112	7	XDOZZ		13215E9970	97403	..RETAINER BATTERY BATTERY CASE..............................	EA	2
112	8	XDOZZ		13215E9969	97403	..BOLT HOOK BAT RETAINER HOLD DOWN...........................	EA	4
112	9	PCOZZ	5325-00-276-6343	MS35489-23	96906	..GROMET RUBBER BAT CASE.....................................	EA	2
112	10	XDOZZ		13213E9136	97403	..CASE BATTERY CARRIER BATTERY ASSY..........................	EA	1
112	11	PAOZA	6140-00-057-2554	MS35000-3	96906	.BATTERY,DRY STORAGE, 12 VOLT,CARRIER........................	EA	4

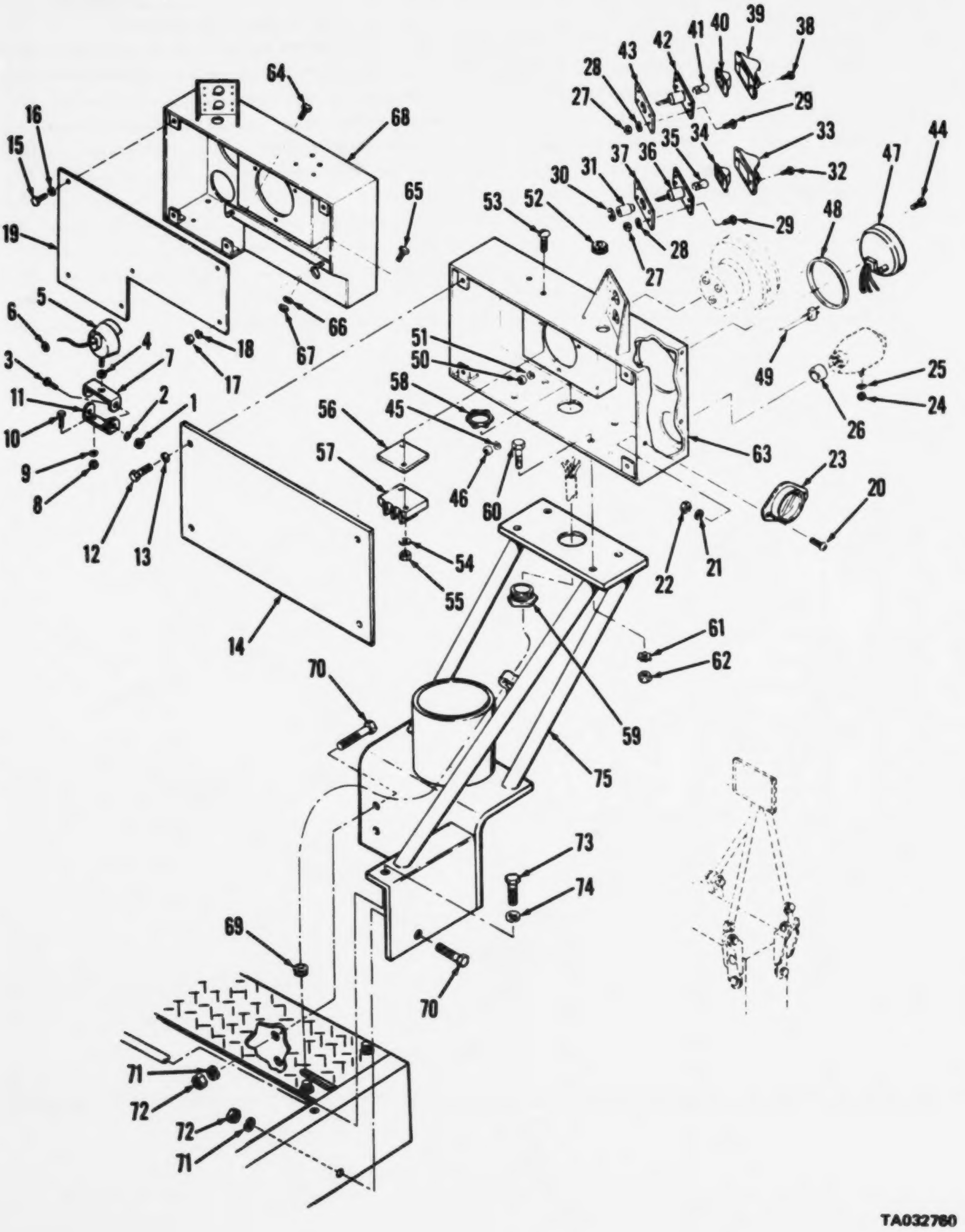

Figure 113. Black-out, turn signal and clearance-lights

(1) ILLUSTRATION (a) FIG NO.	(b) ITEM NO.	(2) SMR CODE	(3) NATIONAL STOCK NUMBER	(4) PART NUMBER	(5) FSCM	(6) DESCRIPTION USABLE ON CODE	(7) U/M	(8) QTY INC IN UNIT
						FUNCTIONAL GROUP 44 LIGHT ASSEMBLIES AND MIRROR ASSEMBLY		
113	1	XBOZZ	5310-00-880-7744	MS51967-5	96906	.NUT,PLAIN,HEXAGON 5/16-18 BRACKET MTG....................	EA	2
113	2	XBOZZ	5310-00-728-2044	MS45904-73	96906	.WASHER,LOCK 5/16 BRACKET MTG..........................	EA	2
113	3	XBOZZ	5306-00-225-9088	MS90726-33	96906	.SCREW CAP HX HD 5/16-18X.815 BRACKET MTG................	EA	2
113	4	XBOZZ	5310-00-616-7998	MS35334-21	96906	.WASHER LOCK 3/8 HEADLIGHT BLKDT.........................	EA	1
113	5	PAOZZ	6220-00-678-9046	MS51318-1	96906	.HEADLIGHT BLACKOUT:CARRIER...............................	EA	1
113	6	PCOZZ	5325-00-C60-0976	MS35490-7	96906	.GROMMET RUBBER INSULATING, HEADLIGHT ASSY...............	EA	1
113	7	XDOZZ		816T1300	27315	.BRACKET TOP BLACKOUT LIGHT...............................	EA	1
113	8	XBOZZ	5310-00-761-6882	MS51967-2	96906	.NUT,PLAIN,HEXAGON 1/4-20 THD, BRACKET....................	EA	2
113	9	XBOZZ	5310-00-582-5965	MS35338-44	96906	.WASHER,LOCK 1/4 IN. BRACKET MTG..........................	EA	2
113	10	XBOZZ	5305-00-071-2238	MS9C725-13	96906	.SCREW CAP HEXAGON 1/4-20 THD 1 3/4" LG BRACKET MTG.........	EA	2
113	11	XDOZZ		816T1297	27315	.BRACKET BOTTOM BLACKOUT LIGHT............................	EA	1
113	12	XBOZZ		MS90725-3	96906	.SCREW,CAP,HEX HD 1-4-20 X 1-2,RIGHT HAND PLATE MTG..........	EA	4
113	13	XBOZZ	5310-00-582-5965	MS35338-44	96906	.WASHER,LOCK 1/4 PLATES MTG RH............................	EA	4
113	14	XDOZZ		818T614	27315	.PLATE RH HEADLIGHT WELDMENT..............................	EA	1
113	15	XBOZZ		MS90725-3	96906	.SCREW,CAP,HEX HD: 1-4-20 X 1-2,LEFT HAND,PLATE MTG..........	EA	4
113	16	XBOZZ	5310-00-582-5965	MS35338-44	96906	.WASHER,LOCK 1/4 IN. PLATES MOUNTING......................	EA	4
113	17	XBOZZ	5310-00-934-9758	MS35649-202	96906	.NUT,PLAIN,HEXAGON NO. 10.................................	EA	16
113	18	XBOZZ	5310-00-615-5596	MS35340-35	96906	.WASHER LOCK. NO.10 REFLECTOR MTG.........................	EA	10
113	19	XDOZZ		818P190	27315	.PLATE LH HEADLIGHT WELDMENT..............................	EA	1
113	20	XBOZZ	5305-00-984-6213	MS35206-266	96906	.SCREW,MACHANE NO.10-24,7/8 IN. REFLECTOR MTG..............	EA	8
113	21	XBOZZ		MS35340-39	96906	.WASHER,LOCK,NO. 10,REFLECTOR MTG..........................	EA	6
113	22	XBOZZ		MS35649-202	96906	.NUT,PLAIN,HEX,NO.10,REFLECTOR MTG.........................	EA	8
113	23	PAOZZ	9905-00-202-3639	MS35387-2	96906	.REFLECTOR INDICATIN AMBER INDICATING......................	EA	4
113	24	XBOZZ	5310-00-880-7746	MS51968-5	96906	.NUT,PLAIN,HEXAGON 5/16-24 HEXAGON LIGHT MTG...............	EA	2
113	25	XBOZZ	5310-00-728-2044	MS45904-73	96906	.WASHER,LOCK 5/16 LIGHT MTG...............................	EA	2
113	26	XDOZZ		18Z244401	27315	.SPACERS 5/16 ID LIGHT MARKER FRONT BLACKOUT................	EA	2
113	27	XBOZZ	5310-00-934-9758	MS35649-202	96906	.NUT,PLAIN,HEXAGON 10-24, CLEARANCE LIGHTS MTG..............	EA	28
113	28	XBOZZ	5310-00-045-3296	MS35338-43	96906	.WASHER,LOCK NO.10,CLEARANCE LIGHTS MTG....................	EA	18
113	29	XBOZZ	5305-00-984-6212	MS35206-265	96906	.SCREW,MACHINE 10-24X3/4, CLEARANCE LIGHTS MTG..............	EA	28
113	30	XBOZZ	5310-00-833-8567	18Z2432	27315	.WASHER,SLOTTED LIGHT MARKER..............................	EA	7
113	31	XBOZZ		79Z244701	27315	.SHELL SINGLE FEMALE, LIGHT MARKER.........................	EA	7
113		PAOZZ	6220-00-725-9295	MS35422-1	96906	.LIGHT MARKER BLACKOUT....................................	EA	2
113	32	XBOZZ		MS35215-25	96906	..SCREW MACHINE DOOR MTG..................................	EA	2
113	33	PBOZZ	6220-00-752-6516	7526516	19207	..DOOR BLACKOUT...	EA	1

(1) ILLUSTRATION (a) FIG NO.	(b) ITEM NO.	(2) SMR CODE	(3) NATIONAL STOCK NUMBER	(4) PART NUMBER	(5) FSCM	(6) DESCRIPTION USABLE ON CODE	(7) U/M	(8) QTY INC IN UNIT
113	34	PAOZZ	6220-00-752-5993	7525993	19207	..LENS LIGHT BLACKOUT	EA	1
113	35	PAOZZ	6240-00-019-0877	190877	19207	..LAMP,INCANDESCENT BLACKOUT LIGHT	EA	1
113	36	PAOZZ	6250-00-371-4018	7526515	19207	..PLATE,MOUNTING,LAMP BLACKOUT LIGHT	EA	1
113	37	PAOZZ	5330-00-353-0959	7526509	00000	..FELT MECHANICAL BLACKOUT LIGHTS	EA	1
113		PAOZZ	6220-00-577-3434	MS35423-1	96906	.LIGHT MARKER CLEARANCE	EA	5
113	38	XBOZZ		MS35215-25	96906	..SCREW MACHINE DOOR MTG	EA	2
113	39	PBOZZ	6220-00-752-6516	7526516	19207	..DOOR CLEARANCE MARKER	EA	1
113	40	PAOZZ	6220-00-752-5993	7525993	19207	..LENS LIGHT CLEARANCE MARKER	EA	1
113	41	PAOZZ	6240-00-019-0877	190877	19207	..LAMP,INCANDESCENT CLEARANCE MARKER	EA	1
113	42	PAOZZ	6250-00-371-4018	7526515	19207	..PLATE MOUNTING LAMP CLEARANCE MARKER	EA	1
113	43	PAOZZ	5330-00-353-0959	7526509	00000	..FELT MECHANICAL CLEARANCE LIGHTS	EA	1
113	44	XBOZZ	5305-00-889-3002	MS35206-242	96906	.SCREW MACHINE 8-32X5/16	EA	2
113	45	XBOZZ	5310-00-045-3295	MS35338-42	96906	.WASHER,LOCK NO.8-LIGHT TURN SIGNAL	EA	2
113	46	XBOZZ	5310-00-934-9757	MS35649-282	96906	.NUT,PLAIN,HEXAGON NO. 8-32	EA	2
113		PAOZZ	6220-00-086-4894	N402-22	13548	.LIGHT TURN SIGN HEADLIGHT ASSY	EA	2
113	47	PAOZZ	6220-00-451-4981	40209Y	13548	..STOP LIGHT-TAIL TURN SIGNAL	EA	1
113	48	PAOZZ	5325-00-455-0561	40MGR	13548	..GROMMET MOUNTIN TURN SIGNAL LIGHT	EA	1
113	49	XDOZZ		PL3	13548	..HARNESS WIRING TURN SIGNAL	EA	1
113	50	PAOZZ	5310-00-934-9758	MS35649-202	96906	.NUT, PLAIN, HEX NO. 10-24, HEADLIGHT MOUNTING	EA	6
113	51	PAOZZ	5310-00-045-3296	MS35338-43	96906	.WASHER, LOCK NO. 10, HEADLIGHT MOUNTING	EA	6
113	52	PCOZZ	5325-00-060-0976	MS35490-7	96906	.GROMMET, RUBBER HEADLIGHT WIRING	EA	1
113	53	PAOZZ	5305-00-984-6213	MS35206-266	96906	.SCREW, MACHINE NO. 10-24X 7/8, TERMINAL BOARD	EA	4
113	54	PAOZZ	5310-00-045-3296	MS35338-43	96906	.WASHER, LOCK NO. 10 TERMINAL BOARD MOUNTING	EA	4
113	55	XBOZZ	5310-00-934-9751	MS35650-302	96906	.NUT,PLAIN,HEXAGON TERMINAL NO. 10	EA	4
113	56	PCOZZ		2071590	27315	.INSULATOR ELECT TERMINAL BD	EA	2
113	57	XDOZZ		39T83	27315	.BOARD TERMINAL HEADLIGHT ASSY	EA	2
113	58	XBOZZ		2071589D6	27315	.LOCK NUT,ELECTRICAL ELEC COND	EA	1
113	59	XBOZZ		44U300433	27315	.NIPPLE ELEC 1-1/2X2	EA	1
113	60	XBOZZ	5305-00-782-9495	MS90725-111	96906	.SCREW CAP HX HD 1/2-13X1-1/4 BRACKET LAMP RH	EA	4
113	61	XBOZZ		MS45104-84	96906	.WASHER LOCK 1/2 BRACKET LAMP RH	EA	4
113	62	XBOZZ	5310-00-768-0318	MS51967-14	96906	.NUT,PLAIN,HEXAGON 1/2-13 BRACKET LAMP RH	EA	4
113	63	XDOZZ		16J511	27315	.BRACKET LAMP RH HEADLIGHT ASSY	EA	1
113	64	XBOZZ	5305-00-044-4153	MS90725-109	96906	.SCREW,CAP,HEXAGON HEX HD 1/2-13X1.00 SUPPORT MTG	EA	1
113	65	XBOZZ	5305-00-071-1769	MS90725-115	96906	.SCREW CAP HX HD HEX 1/2-13X2 SUPPORT MTG	EA	1
113	66	XBOZZ		MS45104-84	96906	.WASHER LOCK 1/2 BRACKET LAMP LH	EA	2
113	67	XBOZZ	5310-00-768-0318	MS51967-14	96906	.NUT PLAIN HEXAGON 1/2-13 BRACKET LAMP LH	EA	2
113	68	XDOZZ		16J512	27315	.BRACKET LAMP LH HEADLIGHT ASSY	EA	1
113	69	PCOZZ		MS35409-23	96906	.GROMMET RUBBER HEADLIGHT WIRING	EA	2
113	70	XBOZZ	5305-00-725-4138	MS90726-170	96906	.SCREW CAP HX HD HEX HD 5/8-11X3-1/2 SUPPORT MTG	EA	3
113	71	PAOZZ	5310-00-820-6653	MS35338-50	96906	.WASHER,LOCK 5/8 SUPPORT MTG	EA	3

(1) ILLUSTRATION (a) FIG NO.	(b) ITEM NO.	(2) SMR CODE	(3) NATIONAL STOCK NUMBER	(4) PART NUMBER	(5) FSCM	(6) DESCRIPTION USABLE ON CODE	(7) U/M	(8) QTY INC IN UNIT
113	72	XBOZZ	5310-00-763-8920	MS51967-20	96906	.NUT,PLAIN,HEXAGON	EA	3
113	73	XBOZZ	5305-00-071-2235	MS90725-16	96906	.SCREW,CAP,HEXAGON HEX HD 5/8-11X1.1/4 SUPPORT MTG	EA	1
113	74	XBOZZ	5310-00-820-6653	MS35338-50	96906	.WASHER LOCK 5/8 SUPPORT MTG	EA	1
113	75	XDOZZ		816JP6	27315	.SUPPORT HDLGHT HEADLIGHT ASSY	EA	1

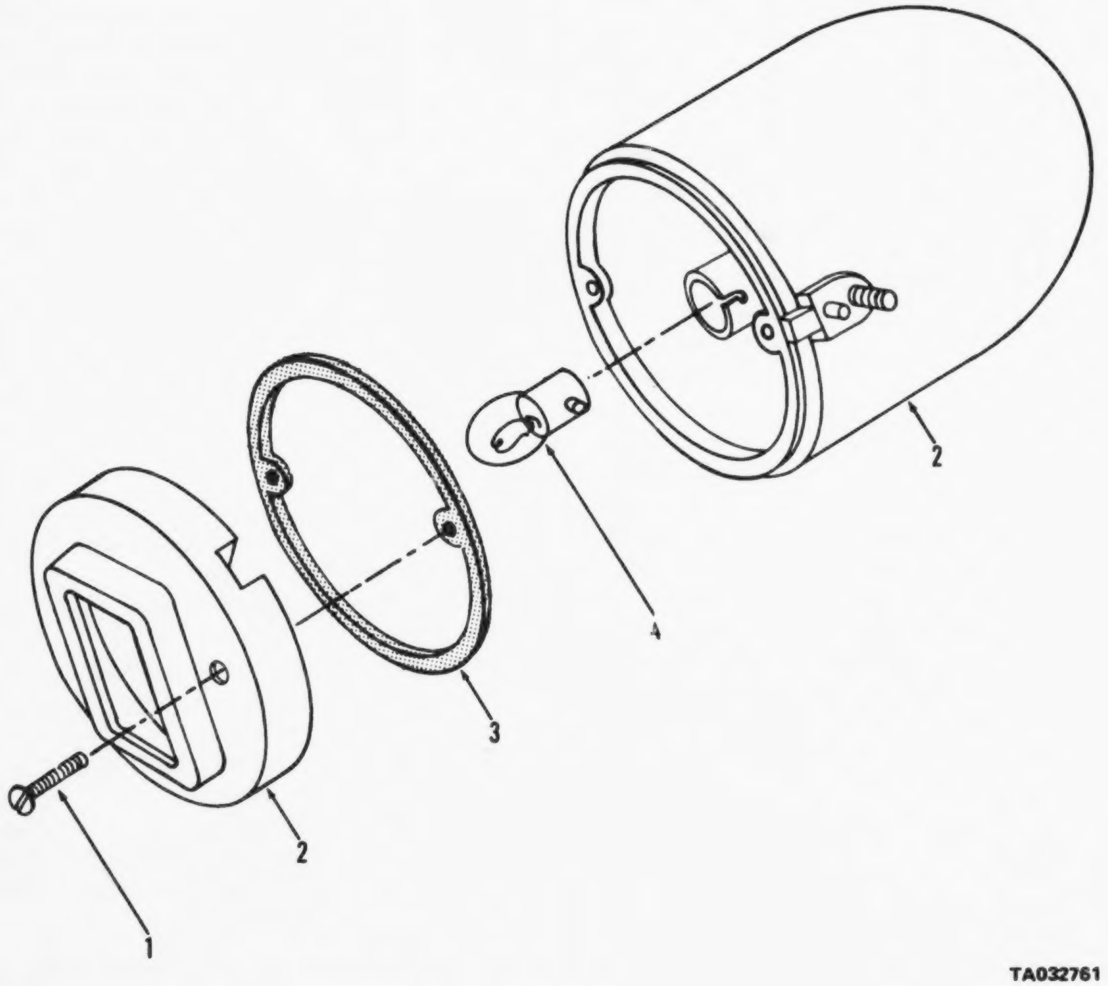

Figure 114. Light assembly, marker

(1) ILLUSTRATION (a) FIG NO.	(b) ITEM NO.	(2) SMR CODE	(3) NATIONAL STOCK NUMBER	(4) PART NUMBER	(5) FSCM	(6) DESCRIPTION USABLE ON CODE	(7) U/M	(8) QTY INC IN UNIT
						FUNCTIONAL GROUP 44 LIGHT ASSEMBLIES AND MIRROR ASSEMBLY		
114		PAOZZ	6220-00-670-7692	8741644	19207	.LIGHT,MARKER FRONT BLACKOUT	EA	2
114	1	XBOZZ	5305-00-764-0070	MS51959-46	96906	..SCREW MACHINE LIGHT MARKER	EA	2
114	2	XBOZZ		924584	73331	..BODY ASSY LIGHT MARKER	EA	1
114	3	XDOZZ	5330-00-678-9047	8694464	73331	..GASKET LIGHT MARKER	EA	1
114	4	PAOZZ	6240-00-019-0877	1251	24455	..LAMP INCANDESCENT LIGHT MARKER	EA	1

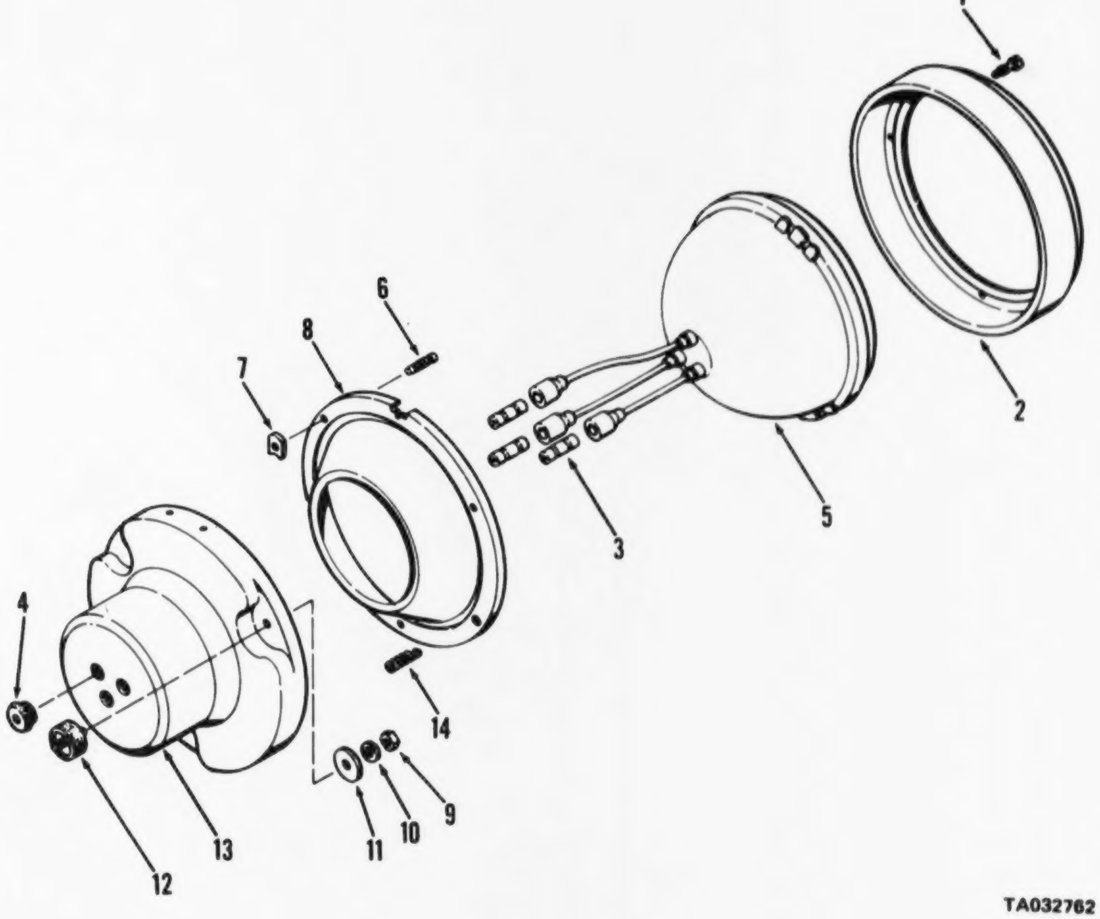

Figure 115. Headlight assembly

(1) ILLUSTRATION (a) FIG NO.	(b) ITEM NO.	(2) SMR CODE	(3) NATIONAL STOCK NUMBER	(4) PART NUMBER	(5) FSCM	(6) DESCRIPTION USABLE ON CODE	(7) U/M	(8) QTY INC IN UNIT
						FUNCTIONAL GROUP 44 LIGHT ASSEMBLIES AND MIRROR ASSEMBLY		
115		PAOZZ	6220-00-678-9045	8741462	19207	.HEADLIGHT HEADLIGHT ASSY..................................	EA	2
115	1	XBOZZ	5305-00-832-5743	8741437	19207	..SCREW,EXTERNALLY HEADLIGHT ASSY..........................	EA	3
115	2	XDOZZ	5365-00-832-5650	8741446	19207	..RING RETAINING ASSY HEADLIGHT ASSY.......................	EA	1
115	3	PAOZZ	5935-00-807-4105	8741492	19207	..ADAPTER,CONNECTOR HEADLIGHT..............................	EA	3
115	4	PCOZZ	5325-00-088-6147	8741442	19207	..GROMMET,RUBBER HEADLIGHT.................................	EA	3
115	5	PAOZZ	6240-00-686-4168	8741491	19207	..LAMP,INCANDESCENT HEADLIGHT ASSY.........................	EA	1
115	6	XBOZZ	5305-00-353-0969	7538146	19207	..SCREW,EXTERNALLY 1-4-28X1 LAMP...........................	EA	2
115	7	XBOZZ		8741495	00000	..NUT FRICTION ADJ SCREW...................................	EA	2
115		XDOZZ		8741447	C0000	..RING MOUNTING HEADLAMP...................................	EA	1
115	8	XBOZZ	5310-00-768-0319	MS51969-2	96906	..NUT PLAIN HEXAGON 1-4-28 SHOCK MTG.......................	EA	3
115	9	XBOZZ	5310-00-582-5965	MS35338-44	96906	..WASHER LOCK SHOCK MTG....................................	EA	3
115	10	XBOZZ		5310675	00000	..WASHER PLAIN SHOCK MTG...................................	EA	3
115	11	PAOZZ	5340-00-192-3726	8741441	19207	..MOUNT,RESILIENT HEADLAMP.................................	EA	3
115	12	XAOZZ		8741443	19207	..SPRING HELICAL EXTENSION RING RETAINING..................	EA	3
115	13	XAOZZ		8741461	00000	..HOUSING LIGHT HEADLAMP ASSY..............................	EA	1
115	14	PAOZZ	5360-00-526-5530	8741443	19207	..SPRING RING HEADLAMP ASSY................................	EA	3

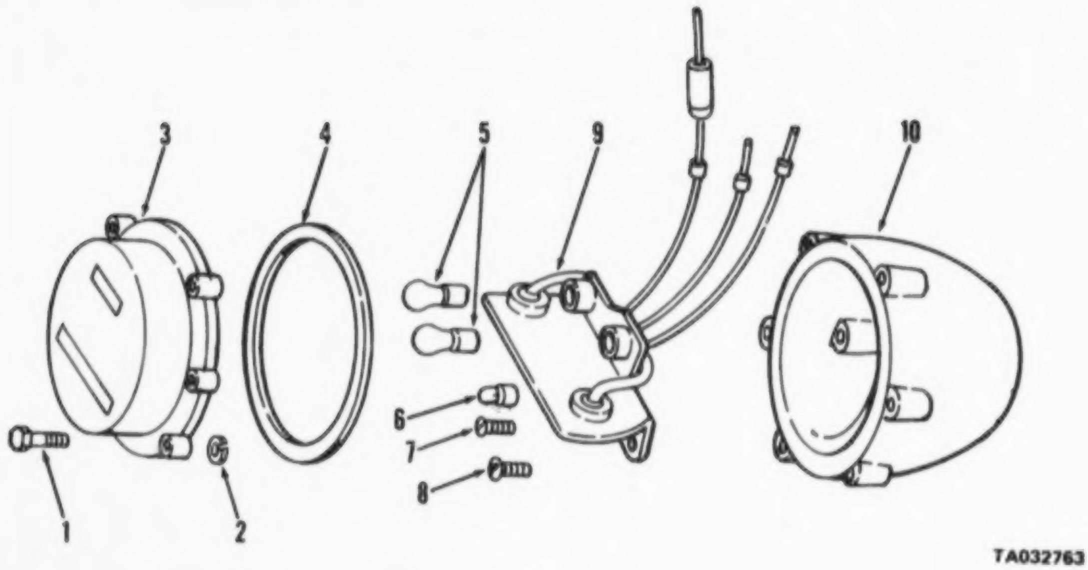

Figure 116. Light, combination, stop and tail

(1) ILLUSTRATION (a) FIG NO.	(b) ITEM NO.	(2) SMR CODE	(3) NATIONAL STOCK NUMBER	(4) PART NUMBER	(5) FSCM	(6) DESCRIPTION USABLE ON CODE	(7) U/M	(8) QTY INC IN UNIT
						FUNCTIONAL GROUP 44 LIGHT ASSEMBLIES AND MIRROR ASSEMBLY		
116		PAOZZ	6220-00-337-6471	MS91330-1	96906	.STOP 24V REAR OUTRIGGERS................................	EA	1
116	1	XBOZZ	5305-00-737-5654	7320641	19207	..SCREW,MACHINE BO LGHT..................................	EA	6
116	2	PAOZZ	5365-00-732-0642	7320642	19207	..RING,RETAINING BO LIGHT LH REAR........................	EA	6
116	3	XBOZZ		7328020	00000	..DOOR BO LIGHT REAR OUTRIGGER...........................	EA	1
116	4	PAOZZ	5330-00-297-7106	7320658	19207	..PACKING,PREFORMED REAR OUTRIGGER	EA	1
116	5	PAOZZ	6240-00-019-0877	1251	73331	..LAMP INCANDESCENT REAR OUTRIGGER	EA	2
116	6	PAOZZ	6240-00-044-6914	446914	73331	..LAMP,INCANDESCENT REAR OUTRIGGER	EA	1
116	7	XBOZZ	5305-00-889-3002	MS35206-242	96906	..SCREW,MACHINE REAR OUTRIGGER	EA	2
116	8	XBOZZ	5305-00-994-6191	MS35206-243	96906	..SCREW,MACHINE REAR OUTRIGGER	EA	3
116	9	XBOZZ	2590-00-693-3452	8378661	19207	..SOCKET LAMP REAR OUTRIGGER	EA	1
116	10	XBOZZ	6220-00-368-4945	MS53047-1	96906	..BODY BO LIGHT REAR OUTRIGGER...........................	EA	1

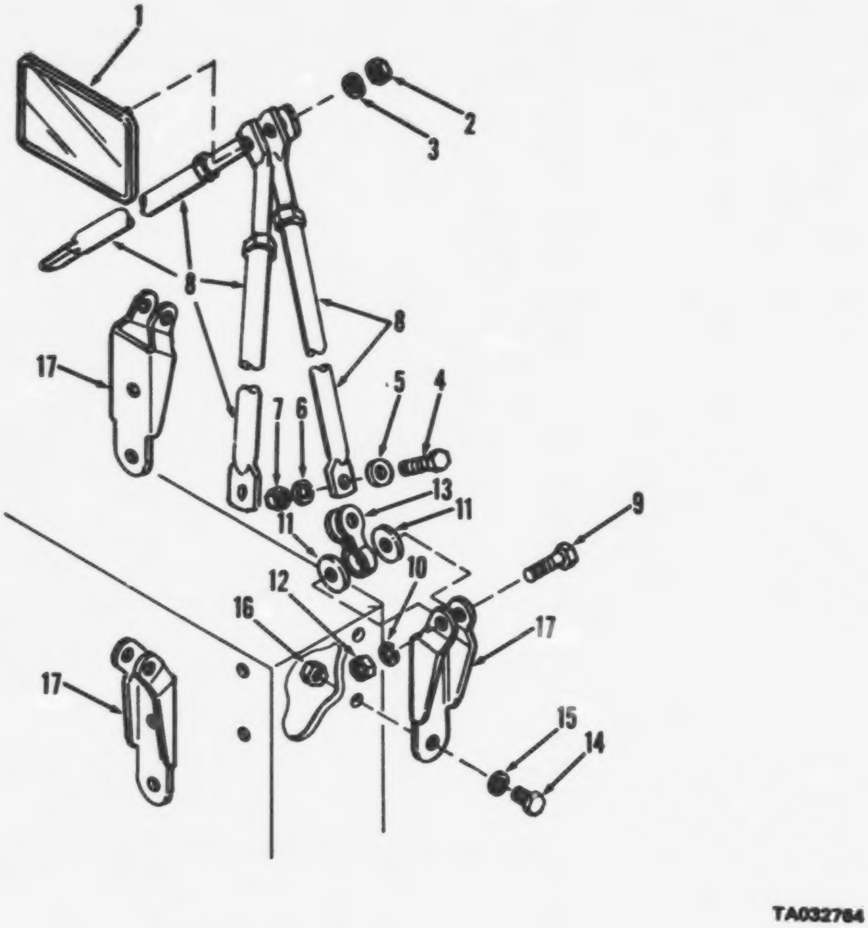

Figure 117. Mirror assembly

(1) ILLUSTRATION (a) FIG NO.	(b) ITEM NO.	(2) SMR CODE	(3) NATIONAL STOCK NUMBER	(4) PART NUMBER	(5) FSCM	(6) DESCRIPTION USABLE ON CODE	(7) U/M	(8) QTY INC IN UNIT
						FUNCTIONAL GROUP 44 LIGHT ASSEMBLIES AND MIRROR ASSEMBLY		
117	1	PAOZZ	2540-00-840-0022	MS53015-1	96906	.MIRROR ASSY REARVIEW..	EA	1
117	2	XBOZZ	5310-00-877-5796	MS21044-N4	96906	..NUT,SELF LOCKING MIRROR ATTACHING...........................	EA	1
117	3	XBOZZ	5310-00-809-4059	MS27183-10	96906	..WASHER FLAT RD 9/32 MIRROR ATTACHING........................	EA	1
117	4	XBOZZ	5305-00-265-2805	MS90726-62	96906	.SCREW CAP HX HD 3/8-24X1-1/4,MIRROR REARVIEW................	EA	3
117	5	XBOZZ	5310-00-087-7493	MS27183-13	96906	.WASHER FLAT 3/8 MIRROR REARVIEW..............................	EA	6
117	6	XBOZZ	5310-00-637-9541	MS35338-46	96906	.WASHER LOCK 3/8 MIRROR REARVIEW..............................	EA	6
117	7	XBOZZ	5310-00-732-0558	MS51967-8	96906	.NUT,PLAIN,HEXAGON 3/8 MIRROR REARVIEW........................	EA	3
117	8	XDOZZ		609002	27315	.ARM MIRROR REARVIEW...	EA	3
117	9	XBOZZ	5305-00-269-2807	MS90726-64	96906	.SCREW CAP HX HD 3/8-24X1-1/2 MIRROR REARVIEW.................	EA	3
117	10	XBOZZ	5310-00-637-9541	MS35338-46	96906	.WASHER,LOCK MIRROR REARVIEW..................................	EA	6
117	11	XBOZZ	5310-00-087-7493	MS27183-13	96906	.WASHER FLAT 3/8,MIRROR REARVIEW..............................	EA	6
117	12	XBOZZ	5310-00-732-0558	MS51967-8	96906	.NUT,PLAIN,HEXAGON 3/8 MIRROR REARVIEW........................	EA	3
117	13	XDOZZ		MS50022	27315	.BRACKET UNIVERSAL,MIRROR REARVIEW............................	EA	3
117	14	XBOZZ	5306-00-225-8496	MS90725-31	96906	.SCREW CAP HX HD 5/16-18X5/8 MIRROR REARVIEW..................	EA	6
117	15	XBOZZ	5310-00-728-2044	MS45904-73	96906	.WASHER,LOCK 5/16, MIRROR REARVIEW............................	EA	6
117	16	XBOZZ	5310-00-880-7744	MS51967-5	96906	.NUT,PLAIN,HEXAGON 5/16-18 BRACKET MOUNTING...................	EA	3
117	17	XDOZZ		8168682	27315	.BRACKET MIRROR REARVIEW.......................................	EA	3

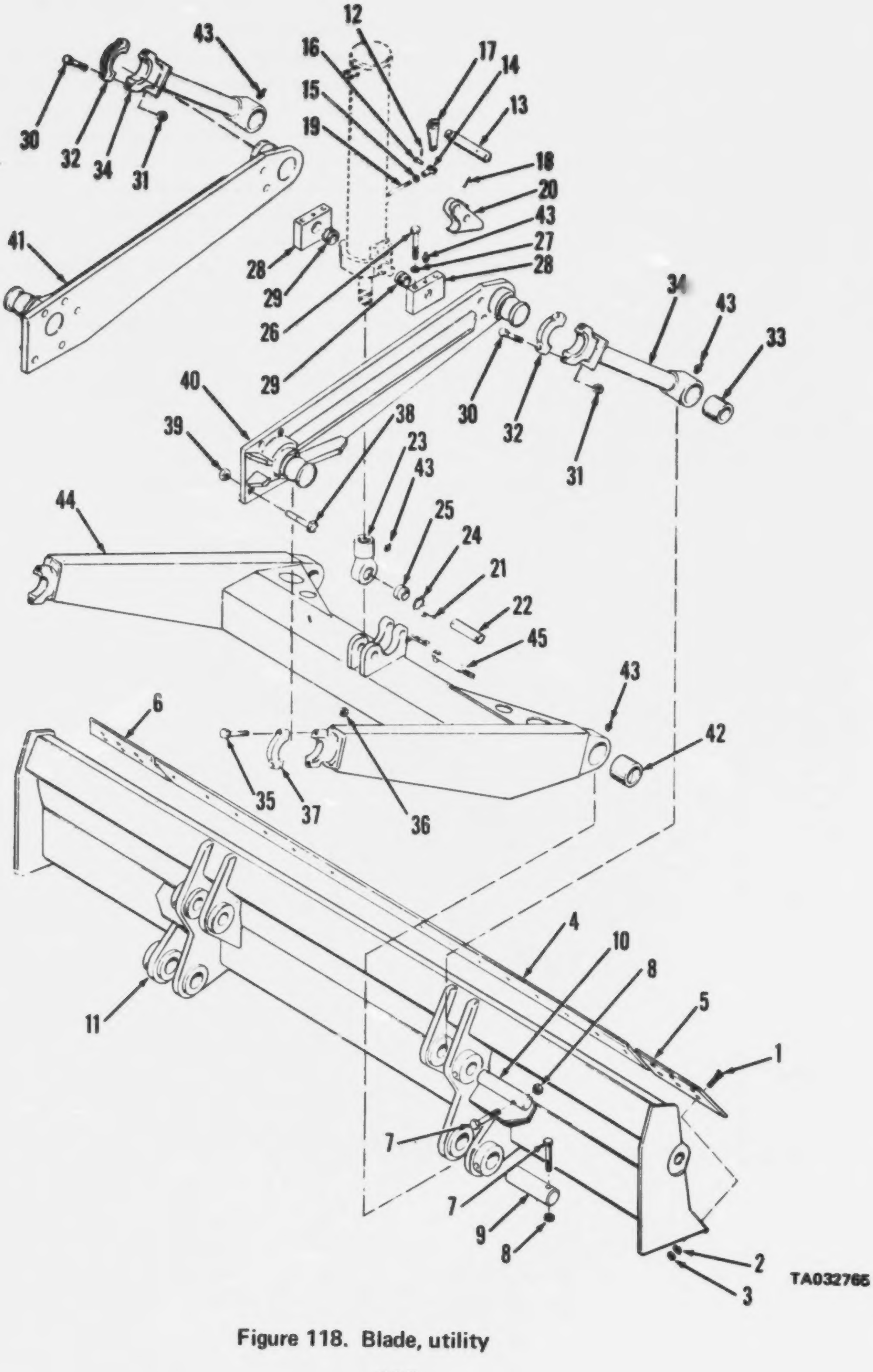

Figure 118. Blade, utility

(1) ILLUSTRATION (a) FIG. NO.	(b) ITEM NO.	(2) SMR CODE	(3) NATIONAL STOCK NUMBER	(4) PART NUMBER	(5) FSCM	(6) DESCRIPTION USABLE ON CODE	(7) U/M	(8) QTY INC IN UNIT
						FUNCTIONAL GROUP 45 UTILITY BLADE AND HYDRAULIC CYLINDER ASSEMBLY		
118	1	XBOZZ	5306-00-127-7239	MS35754-59	96906	..BOLT SQ NECK 3/4-10X2-3/4 CUT EDGE MTG	EA	29
118	2	XBOZZ	5310-00-052-6454	MS35340-51	96906	..WASHER,LOCK 3/4 CUT EDGE MTG	EA	29
118	3	XBOZZ	5310-00-763-8921	MS51967-23	96906	..NUT PLAIN HEX 3/4-10 CUT EDGE MTG	EA	29
118	4	PAOZZ	3830-00-236-2275	MS39103-3	96906	..EDGE CUTTING MOLDBD CARRIER BLADE	EA	1
118	5	PAOZZ	3830-00-858-8133	MS39104-2L	96906	..END BIT EDGE DOZER CARRIER BLADE	EA	1
118	6	PAOZZ	3930-00-858-8132	MS39104-2R	96906	..END BIT EDGE DOZER CARRIER BLADE	EA	1
118	12	XBOZZ	5315-00-835-5820	MS24665-134	96906	..PIN COTTER 1/16X3/4 IN LG LEVER MTG	EA	1
118	13	XBOZZ	5315-00-845-4232	MS35810-32	96906	..PIN STRGT HDLS LEVER MTG	EA	1
118	14	XBOZZ	5340-00-865-9496	MS35812-2	96906	..CLEVIS ROD END LEVER MTG	EA	1
118	15	XBOZZ		MS51968-2	96906	..NUT,PLAIN,HEX,CLEVIS LOCKING	EA	1
118	16	XBOZZ	5315-00-631-1320	MS9048-173	96906	..PIN,SPRING LEVER RTNG	EA	1
118	17	XDOZZ	3040-00-240-5379	13206E2119	97403	..LEVER ARM HOOK RELEASE	EA	1
118	18	PAOZZ	5315-00-821-2437	MS9048-178	96906	..PIN SPRING STL HOOK RTNG	EA	1
118	19	PAOZZ	3040-01-028-3632	819P32	27315	..SHAFT,SHOULDERED HOOK MTG	EA	1
118	20	PAOZZ	3930-01-037-1321	808P9	27315	..HOOK,CYLINDER UTILITY BLADE	EA	1
118	43	PAOZZ	4730-00-050-4208	MS15003-1	96906	..FITTING LUBRICATION CARRIER BLADE	EA	9
118	45	PAOZZ	3810-00-400-7006	13206E5353	97403	..ARM,LOCKING CARRIER	EA	1

AMC FORM 1770, 1 OCT 73 (REPLACES AMC TEST FORMS 1753 AND 1754, 8 APR 73, WHICH WILL BE USED UNTIL 1 AUL 74)

REPAIR PARTS LIST

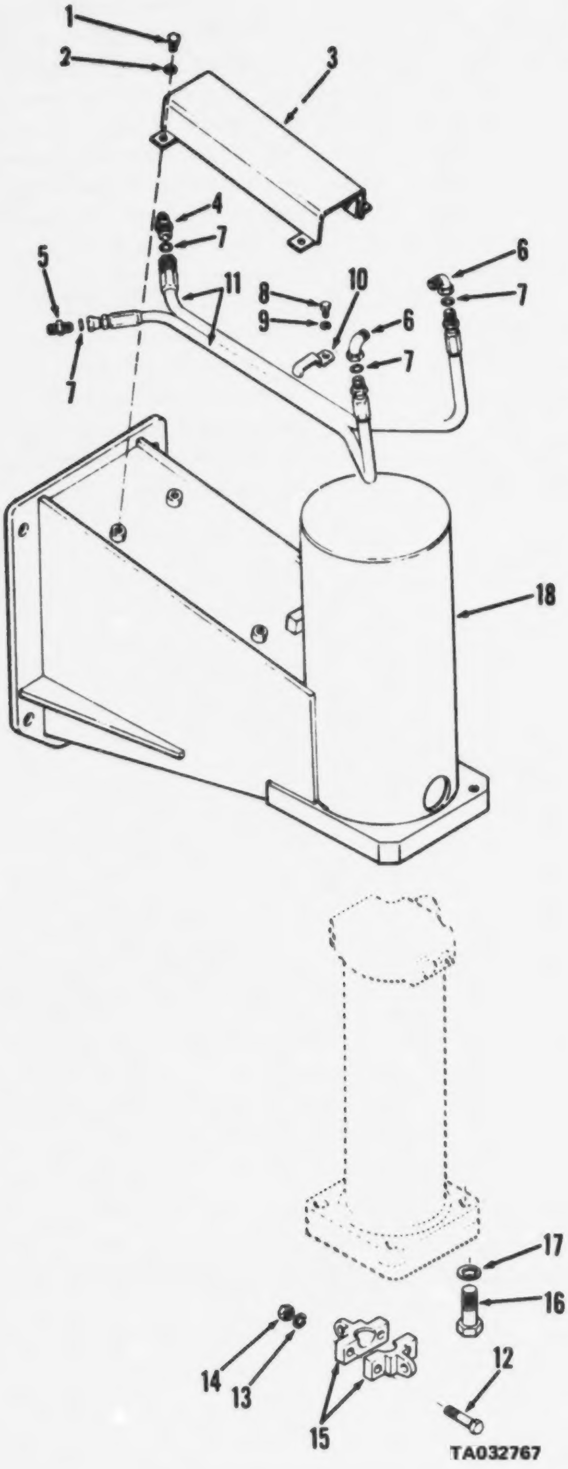

Figure 120. Outriggers, front

(1) ILLUSTRATION (a) FIG NO.	(b) ITEM NO.	(2) SMR CODE	(3) NATIONAL STOCK NUMBER	(4) PART NUMBER	(5) FSCM	(6) DESCRIPTION USABLE ON CODE	(7) U/M	(8) QTY INC IN UNIT
						FUNCTIONAL GROUP 46 OUTRIGGERS AND RELATED PARTS		
120	1	XBOZZ	5305-00-269-3209	MS90725-58	96906	..SCREW,CAP,HEXAGON DECK OUTRIGGER........................	EA	4
120	2	XBOZZ	5310-00-637-9541	MS35338-46	96906	..WASHER,LOCK DECK OUTRIGER................................	EA	4
120	3	XBOZZ		827N594	27315	..STEP PLATE DECK OUTRIGGER FRONT..........................	EA	1
120	4	XBOZZ		D404	91561	..ADAPTER CPLG OUTRIGGER HYD HOSE..........................	EA	1
120	5	XBOZZ	4730-00-471-0045	13205E4421-1	97403	..COUPLING,BODY OUTRIGGER HYDRAULIC HOSE..................	EA	1
120	6	XBOZZ		849FSC08X08	30327	..ELBOW TUBE 1/2-3/4-16X3/4-16 HYDRAULIC.................	EA	2
120	7	PAOZZ	5330-00-579-7916	MS28775-115	96906	..PACKING,PREFORMED OUTRIGGER HOSE CPLG..................	EA	4
120	8	XBOZZ	5305-00-989-7434	MS35207-263	96906	..SCREW,MACHINE NO 10-32X3/8 HOSE CLAMP..................	EA	1
120	9	XBOZZ	5310-00-045-3296	MS35338-43	96906	..WASHER,LOCK NO 10 HOSE CLAMP...........................	EA	1
120	10	PAOZZ	5340-00-731-9611	MS21334-34	96906	..CLAMP,LOOP HOSE MTG.....................................	EA	1
120	11	PCOZZ	4720-00-479-2763	13213E9159	97403	..HOSE ASSEMBLY FRONT OUTRIGGER...........................	EA	2
120		PAOZZ	2590-00-453-8976	13206E5166	97403	..BALL SCKT ASSY OUTRIGGER CYLINDER.......................	EA	1
120	12	XBOZZ	5305-00-725-4133	MS90726-168	96906	...SCREW,CAP,HEXAGON 5/8-18X3 BALL SOCKET................	EA	2
120	13	XBOZZ	5310-00-045-5001	MS35340-50	96906	...WASHER,LOCK 5/8 SPRING BALL SOCKET....................	EA	2
120	14	XBOZZ	5310-00-763-8909	MS51968-20	96906	...NUT PLAIN HEXAGON 5/8-18 BALL SOCKET..................	EA	2
120	15	PBOZZ	2590-00-471-0363	6EC922	02280	...SOCKET BALL	EA	2
120	16	XBOZZ	5305-00-082-6977	MS90727-192	96906	..SCREW,CAP,HEXAGON 3/4-16X3-1/4.........................	EA	4
120	17	XBOZZ	5310-00-052-6454	MS35340-51	96906	..WASHER,LOCK 3/4	EA	4

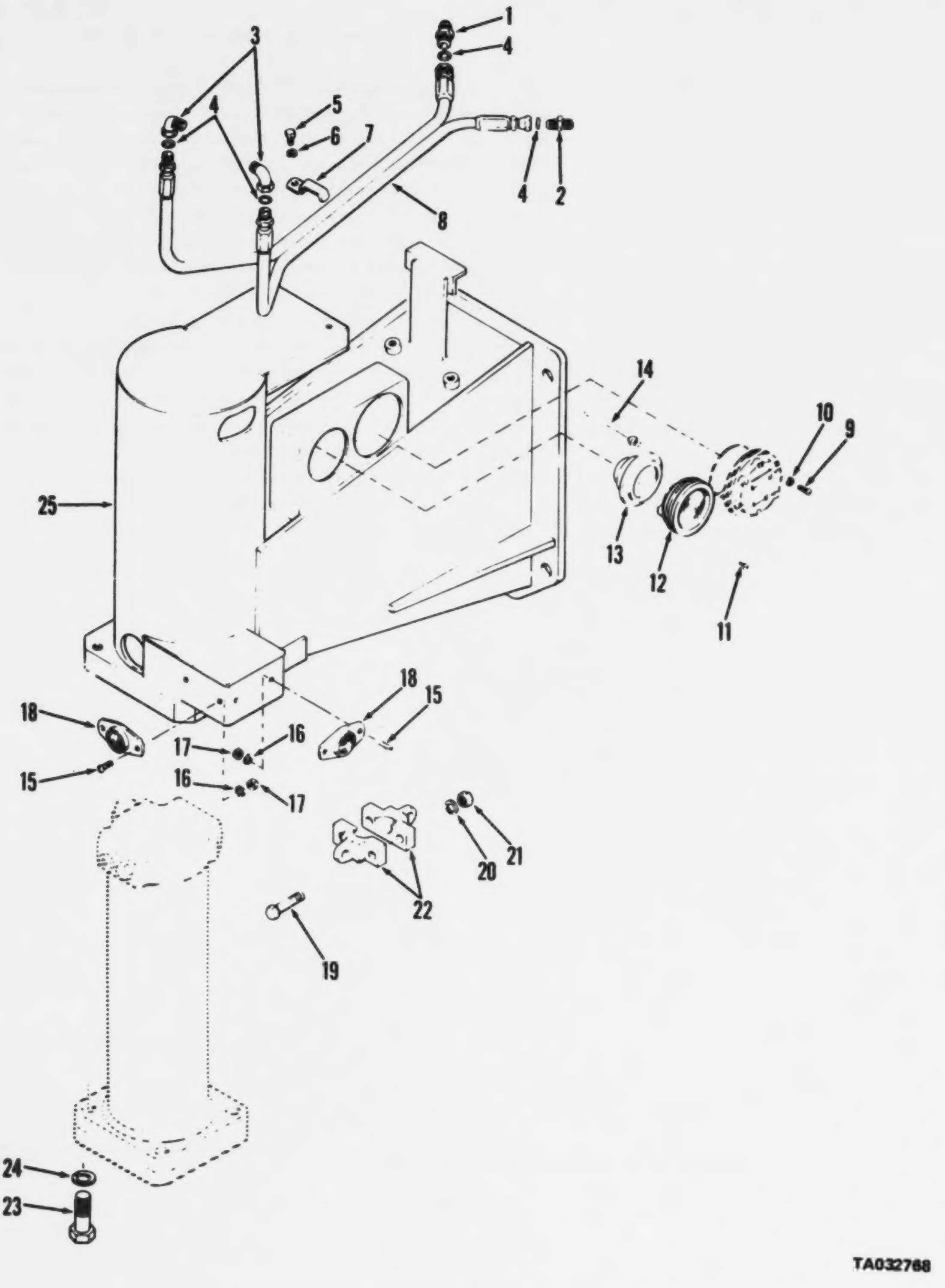

Figure 121. Outrigger, left rear

(1) ILLUSTRATION (a) FIG NO.	(b) ITEM NO.	(2) SMR CODE	(3) NATIONAL STOCK NUMBER	(4) PART NUMBER	(5) FSCM	(6) DESCRIPTION USABLE ON CODE	(7) U/M	(8) QTY INC IN UNIT
						FUNCTIONAL GROUP 46 OUTRIGGERS AND RELATED PARTS		
121	1	XBOZZ		0404	91561	..ADAPTER CPLNG OUTRIGGER HYD HOSE	EA	1
121	2	XBOZZ		0403	91561	..COUPLING HOSE OUTRIGGER HYDRAULIC HOSE	EA	1
121	3	XBOZZ		849FS008X08	30327	..ELBOW TUBE 1/2-3/4-16X3/4-16 HYDRAULIC	EA	2
121	4	PAOZZ	5330-00-579-7916	MS28775-115	96906	..PACKING,PREFORMED OUTRIGGER HOSE CPLNG	EA	4
121	5	XBOZZ	5305-00-989-7434	MS35207-263	96906	..SCREW,MACHINE NO 10-32X3/8 HOSE CLAMP	EA	1
121	6	XBOZZ	5310-00-045-3296	MS35338-43	96906	..WASHER,LOCK NO 10 HOSE CLAMP	EA	1
121	7	XBOZZ	5340-00-731-5613	MS21334-34	96906	..CLAMP,LOOP HOSE MTG	EA	1
121	8	PCOZZ	4720-00-479-2763	13213E9159	97403	..HOSE ASSEMBLY,NON REAR OUTRIGGER	EA	2
121	9	XBOZZ	5305-00-984-5687	MS35206-307	96906	..SCREW MACHINE 3/8-16X1/2 STP LHGT MTG	EA	2
121	10	XBOZZ	5310-00-637-9541	MS35338-46	96906	..WASHER,LOCK 3/8 STP LHGT MTG	EA	2
121	11	XBOZZ	5305-00-432-4163	MS51861-24	96906	..SCREW,TAPPING TURN SIGNAL LGHT MTG	EA	1
131		PAOOO	6220-00-869-3712	LN402-12-40MGR	13548	..STOP LIGHT-TAILLIGH TURN SIGNAL, LEFT	EA	1
121	12	PAOZZ	6220-00-116-7230	402-12	13548	...STOP LIGHT-TAILLIGH TURN SIGNAL LH REARUTRIGGER	EA	1
121	13	XBOZZ	5325-00-455-0561	40MGR	13548	...RING LAMP TURN SIGNAL RH REAR OUTRIGGER	EA	1
121	14	XBOZZ		PL3	13548	...LEAD ASSY ELEC TURN SIGNAL LH REAR	EA	1
121	15	XBOZZ	5305-00-988-1723	MS35206-279	96906	..SCREW,MACHINE 1/4-20X1/2 REFLECTOR MTG	EA	4
121	16	XBOZZ	5310-00-582-5965	MS35338-44	96906	..WASHER,LOCK 1/4 REFLECTOR MTG	EA	4
121	17	XBOZZ	5310-00-761-6882	MS51967-2	96906	..NUT,PLAIN,HEXAGON 1/4 REFLECTOR MTG	EA	4
121	18	PBOZZ	9905-00-205-2795	MS35387-1	96906	..REFLECTOR CRANE	EA	2
121		PBOZZ	2590-00-453-8976	13206E5160	97403	..BALL SOCKET OUTRIGGER CYLINDER	EA	1
121	19	XBOZZ	5305-00-725-4133	MS90726-168	96906	...SCREW,CAP,HEXAGON 5/8-18X3 BALL SOCKET	EA	2
121	20	XBOZZ	5310-00-045-5001	MS35340-50	96906	...WASHER,LOCK 5/8 SPRING BALL SOCKET	EA	2
121	21	XBOZZ	5310-00-763-8905	MS51968-20	96906	...NUT PLAIN HEXAGON 5/8-18 BALL SOCKET	EA	2
121	22	XDOZZ	2590-00-471-0363	680922	02280	...SOCKET BALL HLF OUTRIGGER	EA	2
121	23	XBOZZ	5305-00-082-6977	MS90727-192	96906	..SCREW,CAP,HEXAGON 3/4-16X3-1/4	EA	4
121	24	XBOZZ	5310-00-052-6454	MS35340-51	96906	..WASHER,LOCK 3/4	EA	4

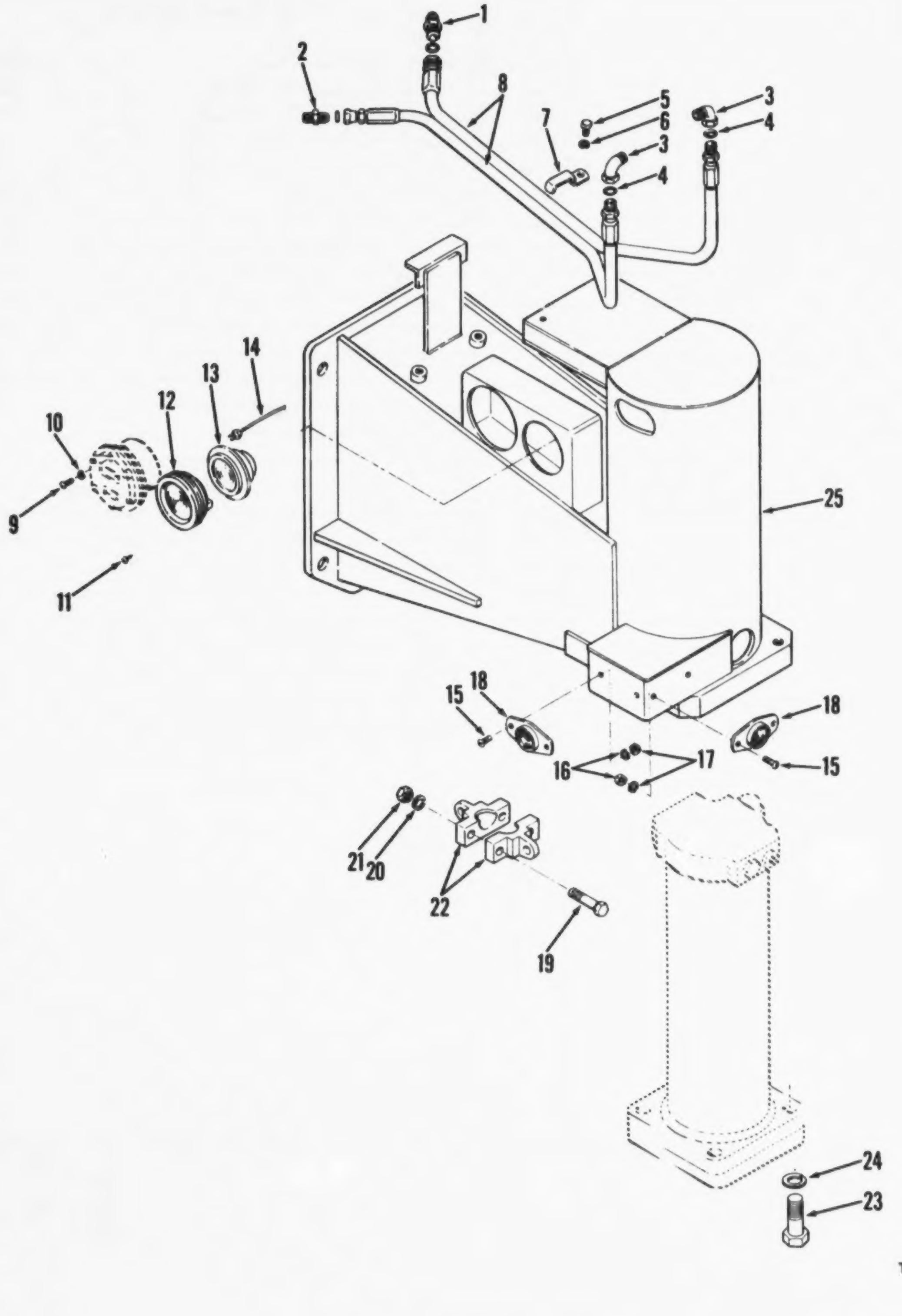

Figure 122. Outrigger, right rear

(1) ILLUSTRATION (a) FIG NO.	(b) ITEM NO.	(2) SMR CODE	(3) NATIONAL STOCK NUMBER	(4) PART NUMBER	(5) FSCM	(6) DESCRIPTION USABLE ON CODE	(7) U/M	(8) QTY INC IN UNIT
						FUNCTIONAL GROUP 46 OUTRIGGERS AND RELATED PARTS		
122	1	XBOZZ		D404	91561	..ADAPTER CPLNG OUTRIGGER HYD HOSE..........................	EA	1
122	2	XBOZZ		D403	91561	..COUPLING HOSE OUTRIGGER HYDRAULIC HOSE....................	EA	1
122	3	XBOZZ		84SFSC08X08	30327	..ELBOW TUBE 1/2-3/4-16X3/4-16 HYDR HOSE....................	EA	2
122	4	XBOZZ		18Q1100115	27315	..PACKING PREFMD OUTRIGGER HOSE CPLNG.......................	EA	4
122	5	XBOZZ	5305-00-989-7434	MS35207-263	96906	..SCREW,MACHINE NO 10-32X3/8 HOSE CLAMP.....................	EA	1
122	6	XBOZZ	5310-00-045-3296	MS35338-43	96906	..WASHER,LOCK NO 10 HOSE CLAMP..............................	EA	1
122	7	XBOZZ	5340-00-731-5611	MS21334-34	96906	..CLAMP,LOOP HOSE MTG.......................................	EA	1
122	8	PCOZZ	4720-00-479-2763	13213E9159	97403	..HOSE ASSEMBLY,NON REAR OUTRIGGER..........................	EA	2
122	9	XBOZZ	5305-00-594-5687	MS35206-307	96906	..SCREW MACHINE 3/8-16X1/2 STP LHGT MTG.....................	EA	2
122	10	XBOZZ	5310-00-637-9541	MS35338-46	96906	..WASHER,LOCK 3/8 STP LHGT MTG..............................	EA	2
122	11	XBOZZ	5305-00-432-4163	MS51861-24	96906	..SCREW,TAPPING TURN SIGNAL LHGT MTG........................	EA	1
122		XDOZZ		LN402-12/40MGP	13548	..LIGHT TURN SIGN RH REAR OUTRIGGER.........................	EA	1
122	12	PAOZZ	6220-00-116-7230	402-12	13548	...STOP LIGHT-TAILLIGH TURN SIGNAL RH REARUTRIGGER..........	EA	1
122	13	XBOZZ	5325-00-455-0561	40MGR	13548	...RING LAMP TURN SIGNAL LH REAR OUTRIGGER..................	EA	1
122	14	XBOZZ		PL3	13548	...LEAD ASSY ELEC TURN SIGNAL RH REAR.......................	EA	1
122	15	XBOZZ	5305-00-988-1723	MS35206-279	96906	..SCREW,MACHINE 1/4-20X1/2 REFLECTOR MTG....................	EA	4
122	16	XBOZZ	5310-00-582-5965	MS35338-44	96906	..WASHER,LOCK 1/4 REFLECTOR MTG.............................	EA	4
122	17	XBOZZ	5310-00-761-6882	MS51967-2	96906	..NUT,PLAIN,HEXAGON 1/4 REFLECTOR MTG.......................	EA	4
122	18	PBOZZ	9905-00-205-2795	MS35387-1	96906	..REFLECTOR CRANE...	EA	2
122	19	XBOZZ	5305-00-725-4133	MS90726-168	96906	...SCREW,CAP,HEXAGON 5/8-18X3 BALL SOCKET...................	EA	2
122	20	XBOZZ	5310-00-045-5001	MS35340-50	96906	...WASHER,LOCK 5/8 SPRING BALL SOCKET.......................	EA	2
122	21	XBOZZ	5310-00-763-8905	MS51968-20	96906	...NUT PLAIN HEXAGON 5/8-18 BALL SOCKET.....................	EA	2
122	22	XDOZZ	2590-00-471-0363	680522	02280	...SOCKET BALL HLF..	EA	2
122	23	XBOZZ	5305-00-082-6977	MS90727-192	96906	..SCREW,CAP,HEXAGON 3/4-16X3-1/4	EA	4
122	24	XBOZZ	5310-00-052-6654	MS35340-51	96906	..WASHER,LOCK 3/4	EA	4

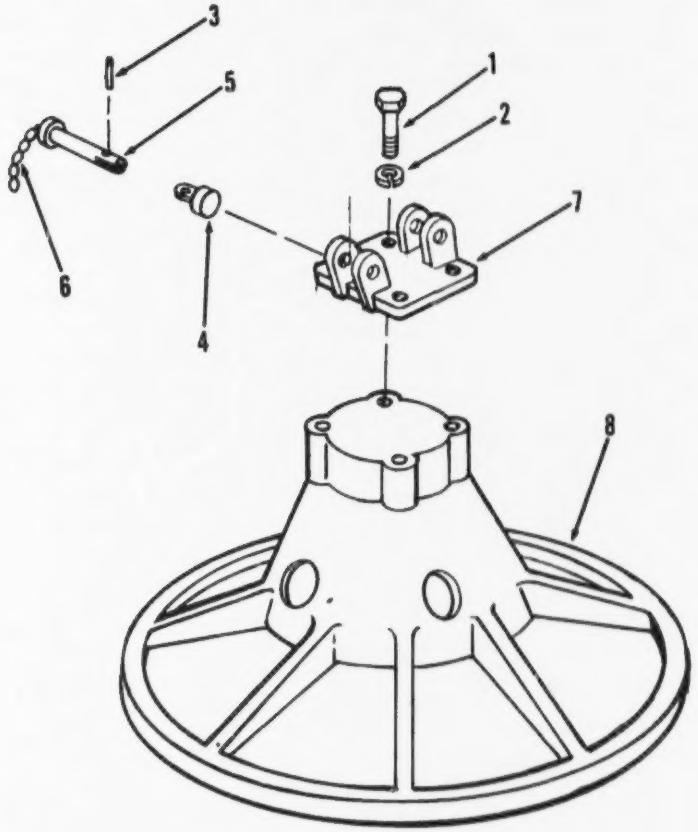

Figure 124. Float pad assembly, outrigger

(1) ILLUSTRATION (a) FIG NO.	(b) ITEM NO.	(2) SMR CODE	(3) NATIONAL STOCK NUMBER	(4) PART NUMBER	(5) FSCM	(6) DESCRIPTION USABLE ON CODE	(7) U/M	(8) QTY INC IN UNIT
						FUNCTIONAL GROUP 46 OUTRIGGERS AND RELATED PARTS		
124		XBOZZ		829N266	27315	.FLOAT PAD ASSY OUTRIGGER..................................	EA	1
124	1	XBOZZ		MS35457-163	96906	..SCREW CAP SOC 5/8-11X1-3/4 FACE PLATE....................	EA	4
124	2	XBOZZ	5310-00-820-6653	MS35338-50	96906	..WASHER,LOCK SPRING,518 FACE PLATE MTG....................	EA	4
124		PAOZZ	3810-00-236-0448	13206E3184	97403	..PLATE FACE FLOAT PAD......................................	EA	1
124	3	XBOZZ		4-818N36	27315	...PIN ROLL 3/160DX9/16 IN LG TOGGLE ATTH..................	EA	2
124	4	XBOZZ		819T184	27315	...TOGGLE PIN FLOAT PAD FACE PLATE.........................	EA	2
124	5	XBOZZ		819T183	27315	...PIN,BAR: PAD TO OUT RIGGER MTG..........................	EA	2
124	6	XBOZZ		6-81PN36	27315	...CHAIN WLD 3/16 TY 1 GR C CL 4 15 LNKS..................	EA	2
124	7	XBOZZ		819T564	27315	...PLATE FLOAT PAD...	EA	1
124	8	XBOZZ		829N268	27315	..FLOAT OUTRIGGER...	EA	1

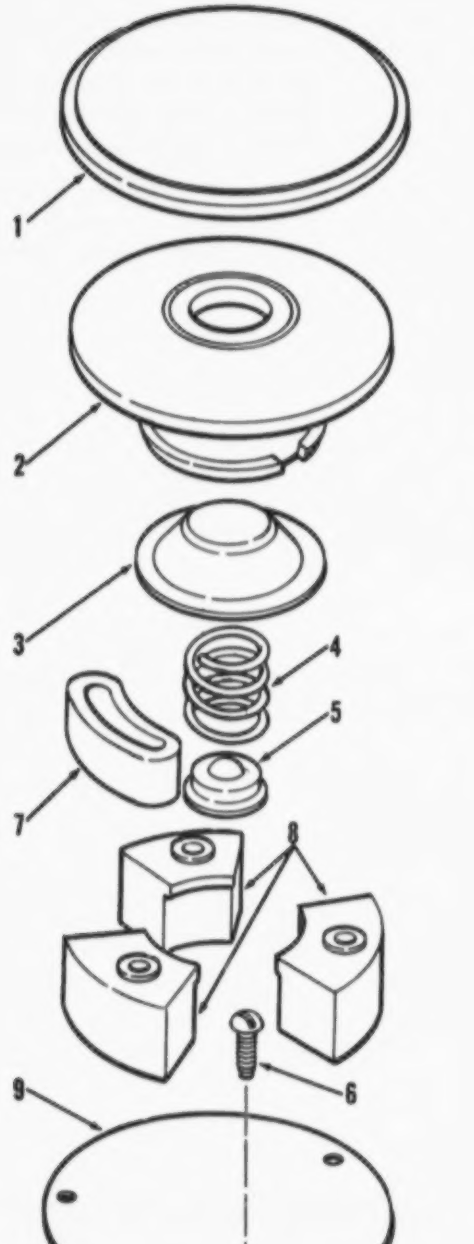

Figure 125. Button assembly, horn

(1) ILLUSTRATION (a) FIG NO.	(b) ITEM NO.	(2) SMR CODE	(3) NATIONAL STOCK NUMBER	(4) PART NUMBER	(5) FSCM	(6) DESCRIPTION USABLE ON CODE	(7) U/M	(8) QTY INC IN UNIT
						FUNCTIONAL GROUP 47 STEERING ASSEMBLY, FRONT,CARRIER		
125		PAOZZ	2590-00-591-0678	465530	77640	.HORN BUTTON CARRIER STEERING SYSTEM..........................	EA	1
125		PAOZZ	2590-00-340-1409	450157	77640	..HORN BUTTON HORN ASSY..	EA	1
125	1	PAOZZ	2590-00-612-2181	450066	77640	...RUBBER COVER HORN BUTTON....................................	EA	1
125	2	XBOZZ	2590-00-371-3137	450029	77640	...HORN BUTTON HORN ASSY.......................................	EA	1
125	3	PAOZZ	5999-00-215-4048	029037	77640	...CUP CONTACT HORN ASSY.......................................	EA	1
125	4	XBOZZ	5360-00-253-7229	401081	77640	...SPRING,HELICAL HORN BUTTON RETURN...........................	EA	1
125	5	XBOZZ	5999-00-374-0826	029031	77640	...BASE SPRING HORN BUTTON ASSY................................	EA	1
125	6	XDOZZ		G148595	77640	...SCREW,SELF-TAPPING..	EA	3
125		XDOZZ	2590-00-737-3216	453077-A1	77640	..CONTACT ASSY HORN ASSY.......................................	EA	1
125	7	XBOZZ		454082	77640	....INSULATOR CONTACT PLATE....................................	EA	3
125	8	XAOZZ		040013	77640	....CONTACT HORN ASSY..	EA	3
125	9	XDOZZ		453077	77640	....PLATE CONTACT HORN ASSY....................................	EA	1

AMC FORM 1779, 1 OCT 73 (REPLACES AMC TEST FORMS 1753 AND 1754, 6 APR 70, WHICH WILL BE USED UNTIL 1 JUL 74)

REPAIR PARTS LIST

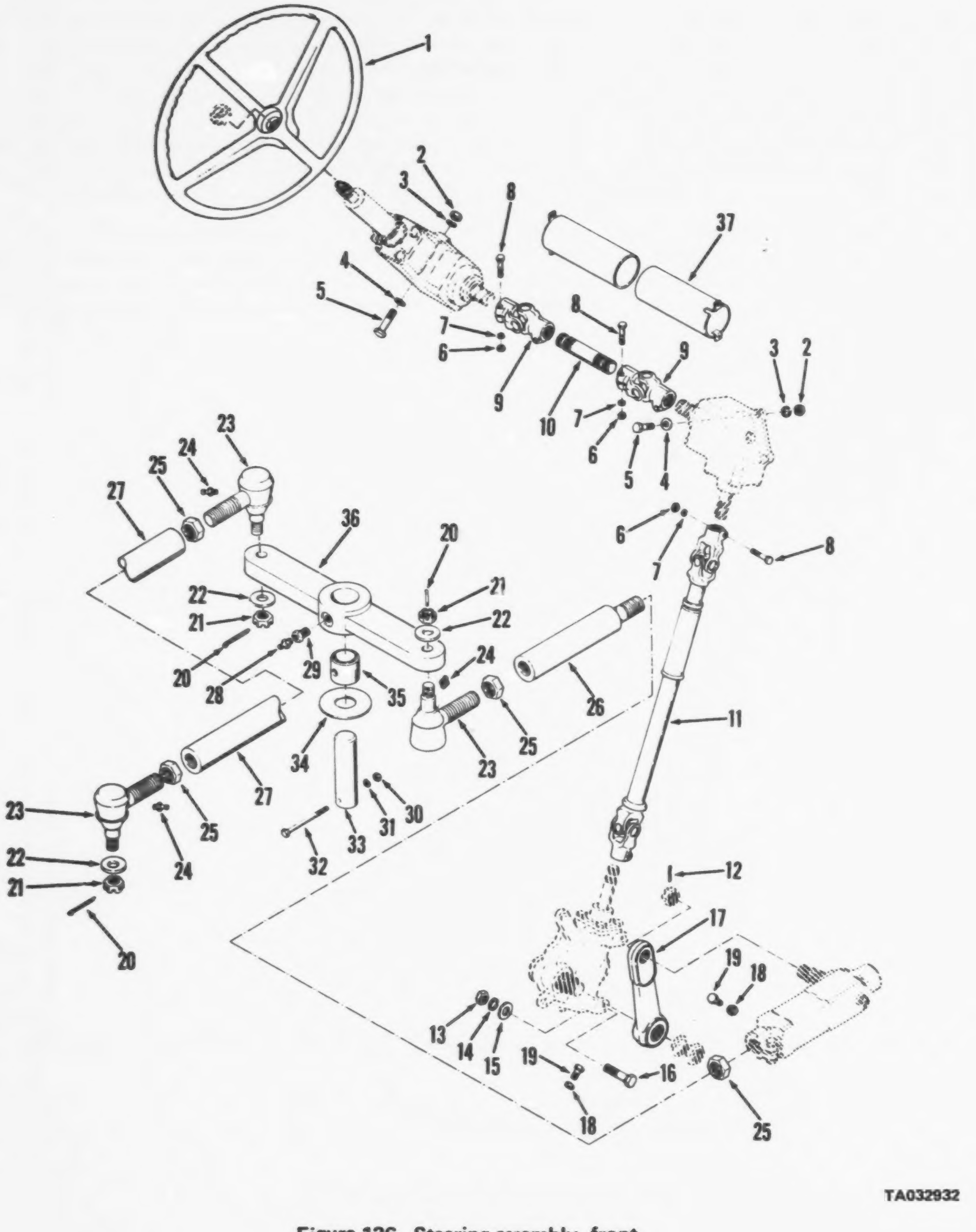

Figure 126. Steering assembly, front

(1) ILLUSTRATION (a) FIG NO.	(b) ITEM NO.	(2) SMR CODE	(3) NATIONAL STOCK NUMBER	(4) PART NUMBER	(5) FSCM	(6) DESCRIPTION USABLE ON CODE	(7) U/M	(8) QTY INC IN UNIT
						FUNCTIONAL GROUP 47 STEERING ASSEMBLY,		
						FRONT,CARRIER		
126		AFOFF		8100J1453	27315	.STEERING SYSTEM STEERING SYSTEM FRONT....................	EA	1
126	1	XBOZZ		68647	77915	..WHEEL STEERING STEERING SYSTEM FRONT....................	EA	1
126	24	PAOZZ	4730-00-050-4208	MS15003-1	96906	..FITTING,LUBRICATION FITTING LUB 1-8 NPT,ALL STUD - TIE ROD ASSY FRONT....................	EA	3
126	25	XBOZZ		MS35691-82	96906	..NUT,HEX,JAM,FRONT STEERING SYSTEM....................	EA	4
126	26	PBOZZ	5340-00-458-8064	13208E6521	97403	..ROD END,THREADED CONNECTOR VALVE TO ARM....................	EA	1
126	27	PBOZZ	4710-00-240-9010	13213E9201	97403	..TUBE STEERING TUBE STEERING LINKAGE....................	EA	1
126	28	PAOZZ	4730-00-050-4208	MS15003-1	96906	..FITTING,LUBRICATION....................	EA	1
126	37	XBOZZ		14074	27315	..GUARD SHAFT STEERING TUBE CONNECTOR....................	EA	2

AMC FORM 1779, 1 OCT 73 (REPLACES AMC TEST FORMS 1753 AND 1754, 6 APR 70, WHICH WILL BE USED UNTIL 1 JUL 74)

REPAIR PARTS LIST

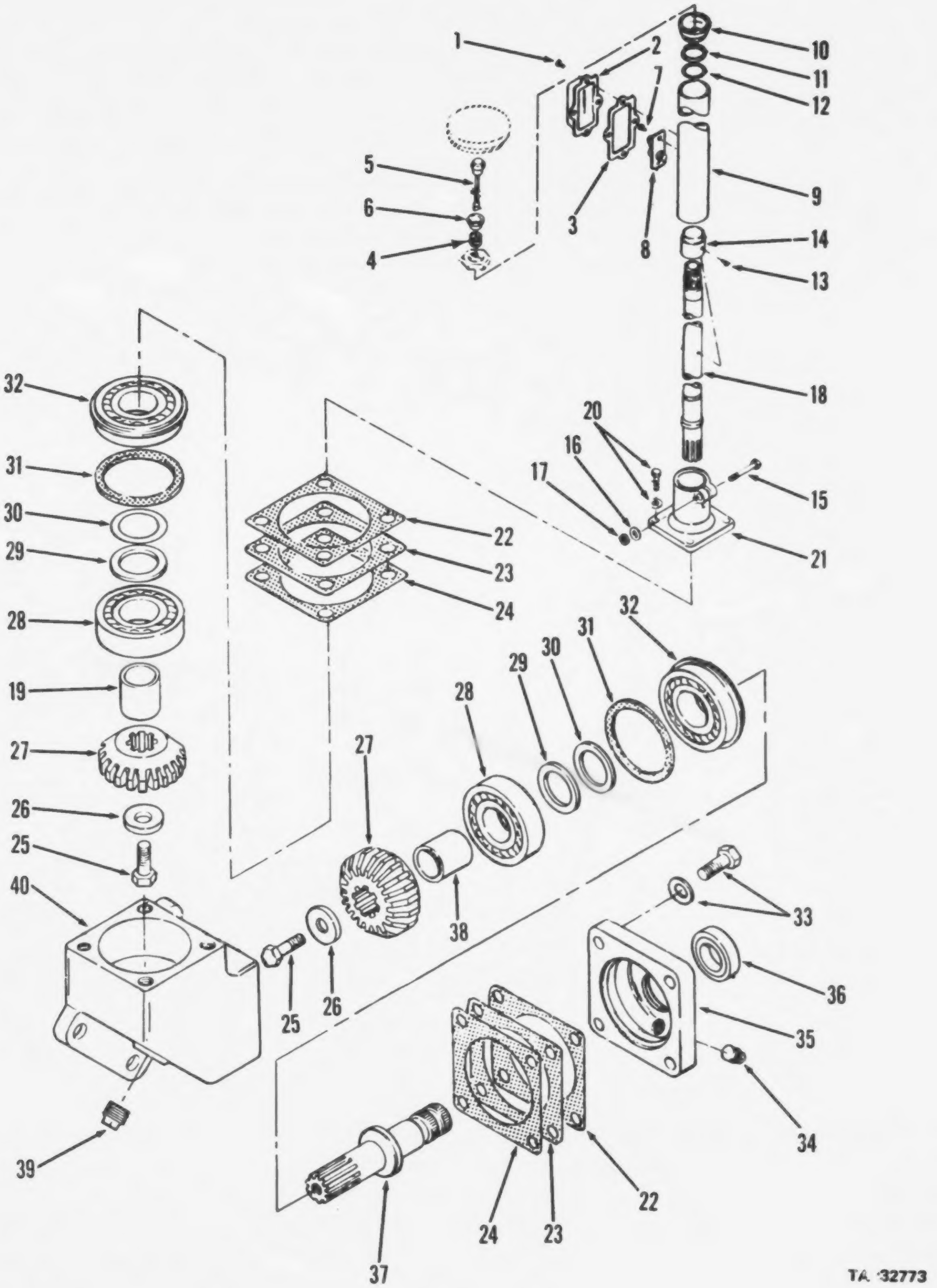

Figure 127. Gear box assembly, front

(1) ILLUSTRATION (a) FIG NO.	(b) ITEM NO.	(2) SMR CODE	(3) NATIONAL STOCK NUMBER	(4) PART NUMBER	(5) FSCM	(6) DESCRIPTION USABLE ON CODE	(7) U/M	(8) QTY INC IN UNIT
						FUNCTIONAL GROUP 47 STEERING ASSEMBLY,		
						FRONT,CARRIER		
127	34	XBOZZ	4730-00-044-4577	1-45HPS	30780	..PLUG,PIPE 1-4NPT SQ HD COVER............................	EA	1
127	39	XBOZZ	4730-00-044-4583	920131	09367	..PLUG PIPE 3-8NPT SQ HD HOUSING..........................	EA	1

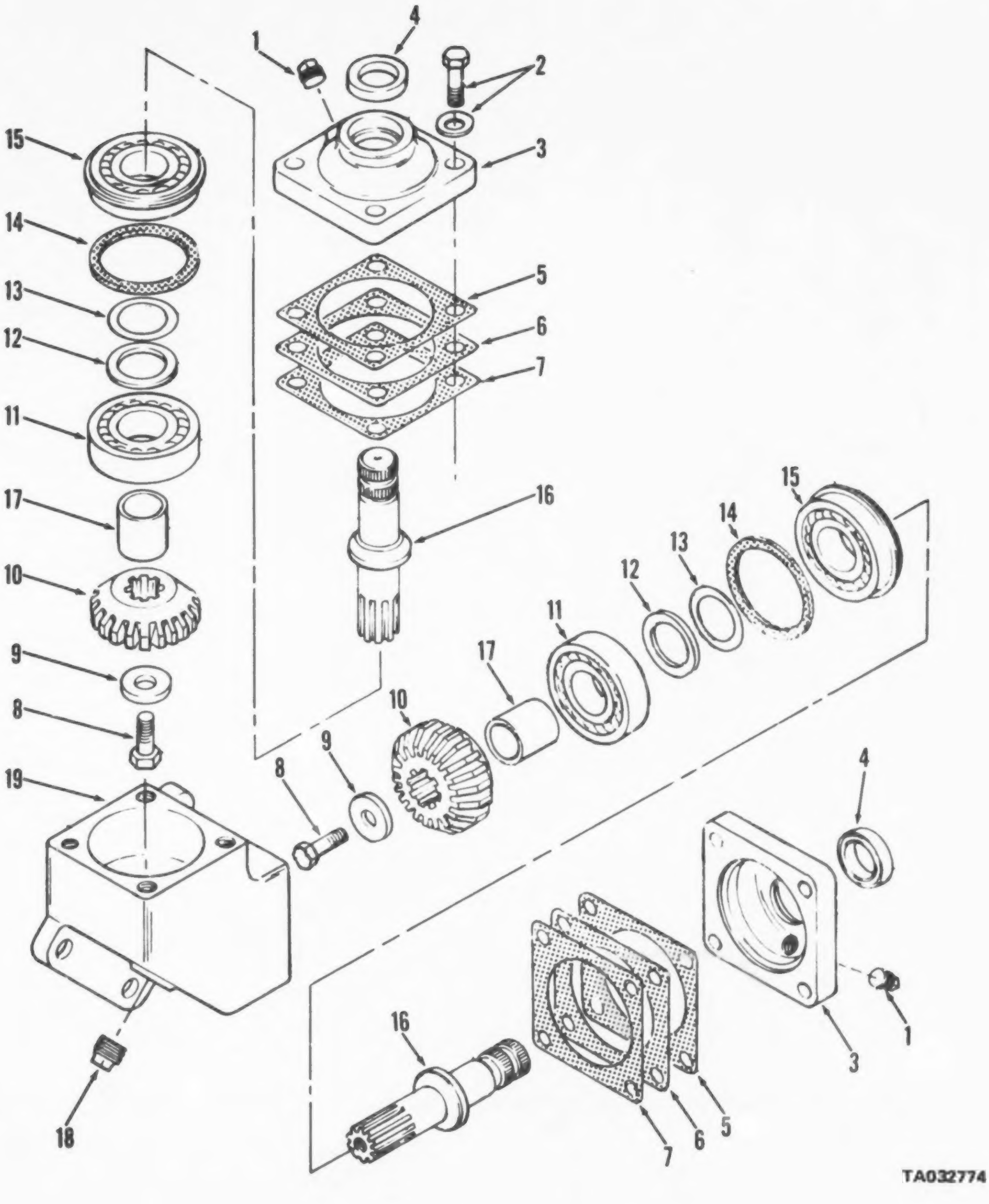

Figure 128. Gear box assembly, stub

(1) ILLUSTRATION (a) FIG NO.	(b) ITEM NO.	(2) SMR CODE	(3) NATIONAL STOCK NUMBER	(4) PART NUMBER	(5) FSCM	(6) DESCRIPTION USABLE ON CODE	(7) U/M	(8) QTY INC IN UNIT
						FUNCTIONAL GROUP 47 STEERING ASSEMBLY, FRONT,CARRIER		
128	1	XBOZZ	4730-00-044-4577	1-4SHPS	30780	..PLUG,PIPE 3-8NPT SQ HD COVER..............................	EA	2
128	12	XBOZZ	5365-00-801-9828	028264	77640	..SPACER BEARING STRG GEAR..................................	EA	2
128	19	XBOZZ	4730-00-044-4583	920131	09367	..PLUG PIPE 3-8NPT HOUSING..................................	EA	1

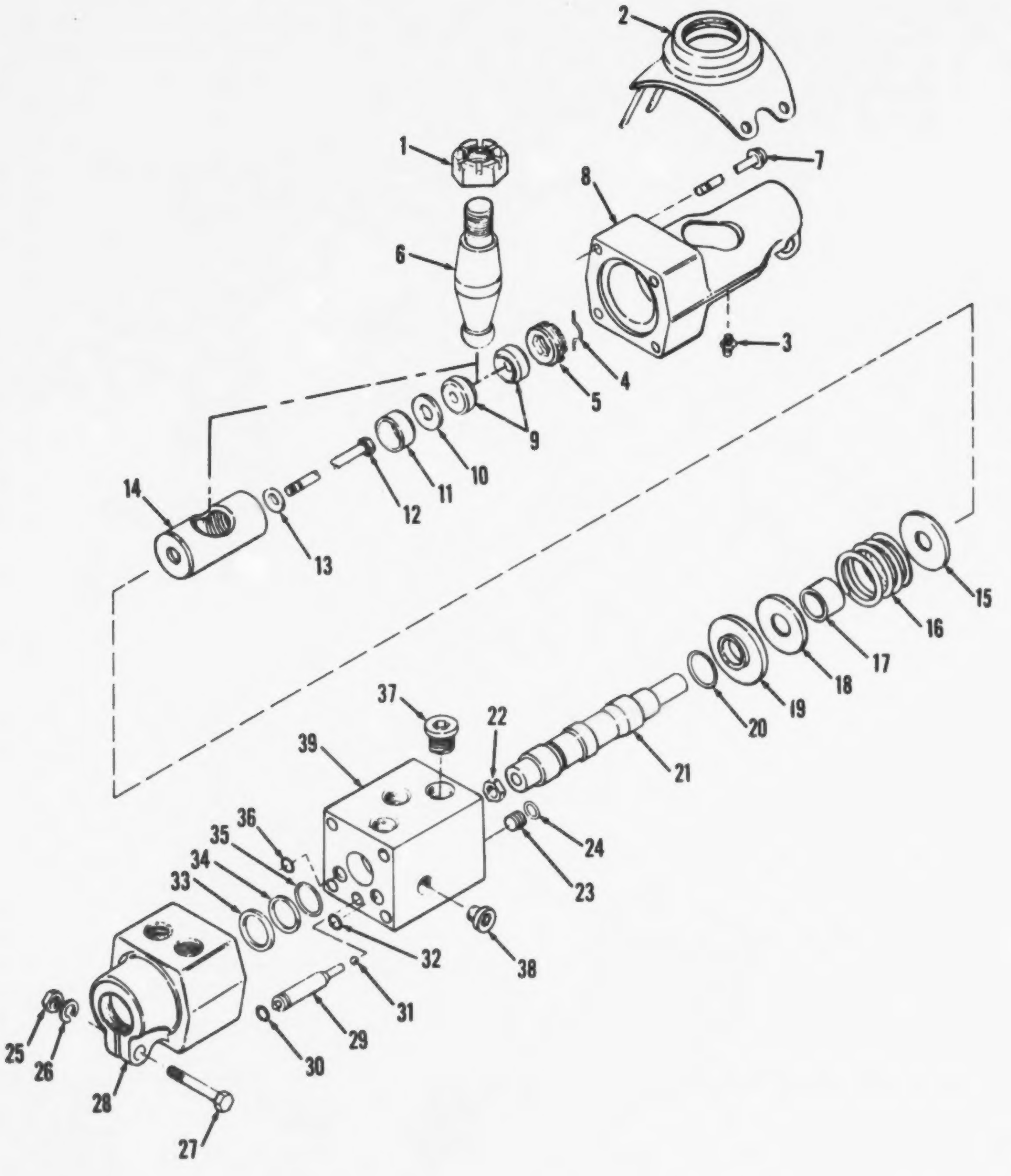

Figure 129. Valve assembly, steering control

(1) ILLUSTRATION (a) FIG NO.	(b) ITEM NO.	(2) SMR CODE	(3) NATIONAL STOCK NUMBER	(4) PART NUMBER	(5) FSCM	(6) DESCRIPTION USABLE ON CODE	(7) U/M	(8) QTY INC IN UNIT
						FUNCTIONAL GROUP 47 STEERING ASSEMBLY, FRONT,CARRIER		
129	3	PAOZZ	4730-00-477-1741	134063	02880	..FITTING,LUBRICATION BALL STUD................................	EA	1

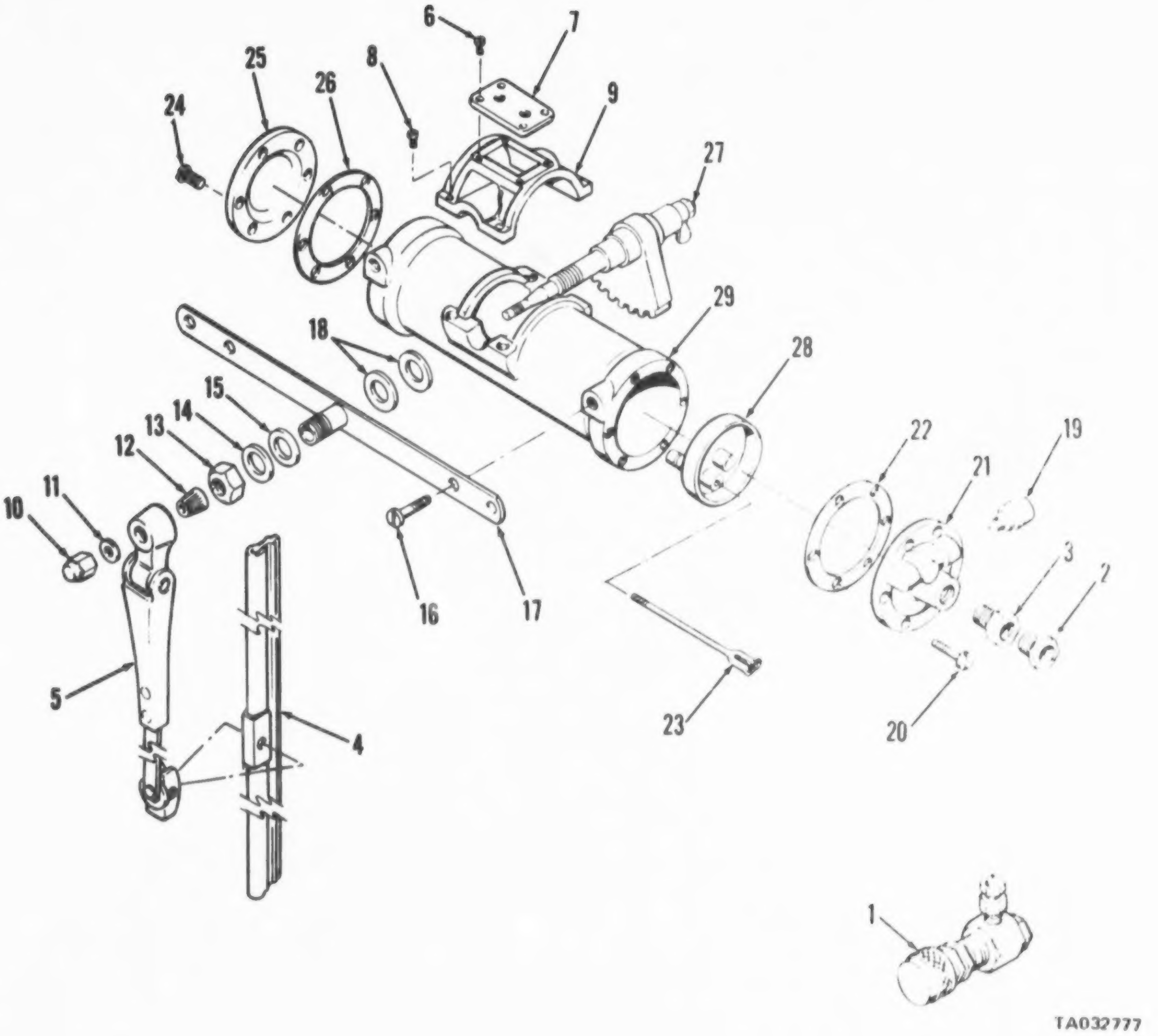

Figure 131. Wiper assembly, windshield

(1) ILLUSTRATION (a) FIG NO.	(b) ITEM NO.	(2) SMR CODE	(3) NATIONAL STOCK NUMBER	(4) PART NUMBER	(5) FSCM	(6) DESCRIPTION USABLE ON CODE	(7) U/M	(8) QTY INC IN UNIT
						FUNCTIONAL GROUP 48 WINDSHIELD WIPER, PRESSURE INDICATOR,HORN,VALVES,LINES AND FITTINGS		
131		PBOOO		13205E3920	97403	.WIPER ASSEMBLY CAB	EA	1
131	1	XDOZZ		75470-52T	60703	..VALVE PRESS REG WNDSHLD WPR	EA	1
131	2	PAOZZ	4730-01-044-2680	365	60703	..INVERTED NUT,TUBE TUBE TO MOTOR	EA	1
131	3	PAOZZ	4730-00-117-9148	366	60703	..ADAPTER,STRAIGHT TUBE TO MOTOR	EA	1
131	4	PAOZZ	2540-00-073-9846	M874-462T	60703	..BLADE WINDSHIELD	EA	1
131	5	PAOZZ	2540-00-073-9849	87415-772T	60703	..ARM,WINDSHIELD CAB	EA	1
131		PAOZZ	2540-01-025-7948	D23298FPD	60703	..MOTOR ASSEMBLY WINDSHIELD WIPER	EA	1
131	6	XBOZZ		87551-16R	60703	...SCREW MOTOR COVER MTG	EA	1
131	7	XDOZZ		F942-6	60703	...COVER MOTOR UNDSHLD WIPER	EA	1
131	8	XBOZZ		87551-16R	60703	...SCREW SHIELD MTG	EA	4
131	9	XAOZZ		82759	60703	...SHIELD WNDSHLD WIPER	EA	1
131	10	XBOZZ		75026-22T	60703	...NUT CAP WNDSHLD WIPER ARM MTG	EA	1
131	11	PAOZZ		2397-62T	60703	...WASHER,LOCK WNDSHLD WPR ARM MTG	EA	1
131	12	XBOZZ	2540-00-690-2726	86324-1	60703	...DRIVER ARM WINDSHIELD WIPER	EA	1
131	13	XBOZZ	5310-00-804-1209	76115ZT	60703	...NUT,PLAIN,HEXAGON GEAR SHAFT	EA	1
131	14	XBOZZ	5310-01-028-4848	77121-32T	60703	...WASHER,FLAT WIPER MOTOR SEAL	EA	1
131	15	XDOZZ		77121-1	60703	...WASHER NNMTLLC WIPER MOTOR SEAL	EA	1
131	16	XBOZZ		1771-16J	60703	...SCREW MACHINE NO 12-24X3/8 PLATE MTG	EA	2
131	17	XDOZZ		F1043-5	60703	...PLATE MOUNTING WIPER MOTOR	EA	1
131	18	PAOZZ		76116-2	60703	...WASHER NNMTLLC WIPER MOTOR SEAL	EA	2
131	19	XDOZZ		75704-1J	60703	...SILENCER VLV HD WNDSHLD WIPER MOTOR	EA	1
131	20	XBOZZ		87551-16R	60703	...SCREW VALVE HEAD MTG	EA	1
131	21	XBOZZ		F424-56	60703	...HEAD VALVE WNDSHLD WPR MTR	EA	1
131	22	KFOZZ		F422	60703	...GASKET VALVE HD WIPER MOTOR PART OF KITP/N SP1079-54	EA	1
131	23	KFOZZ		F1526-3	60703	...VALVE STEM WIPER MOTOR PART OF KIT.....SP1079-54	EA	1
131	24	XBOZZ		87591-16R	60703	...SCREW PLATE MTG	EA	6
131	25	XDOZZ		F423	60703	..PLATE END WIPER MOTOR	EA	1
131	26	KFOZZ		F422	60703	...GASKET WIPER PLATE PART OF KIT	EA	1
131		KFOZZ		F1350-16	60703	...PISTON ASSY WIPER	EA	1
131	27	PAOZZ	2540-00-227-5535	F1386-1J	60703	...SHAFT AND GEAR WIPER MOTOR	EA	1
131	28	KFOZZ		F1372-16	60703	...VALVE STOP WIPER MOTOR PART OF KIT.....SP1079-54	EA	1
131	29	XDOZZ		F940-2	60703	...CYL MTR W/BYPSS WIPER MOTOR	EA	1
131		PAOZZ	2090-00-570-1739	SP1079-54	60703	.REPAIR KIT,PLUNGER WIPER MOTOR	EA	1
131	22					GASKET VALVE HD	EA	1
131	23					VALVE STEM	EA	1
131	26					GASKET	EA	1
131	28					VALVE STOP	EA	1

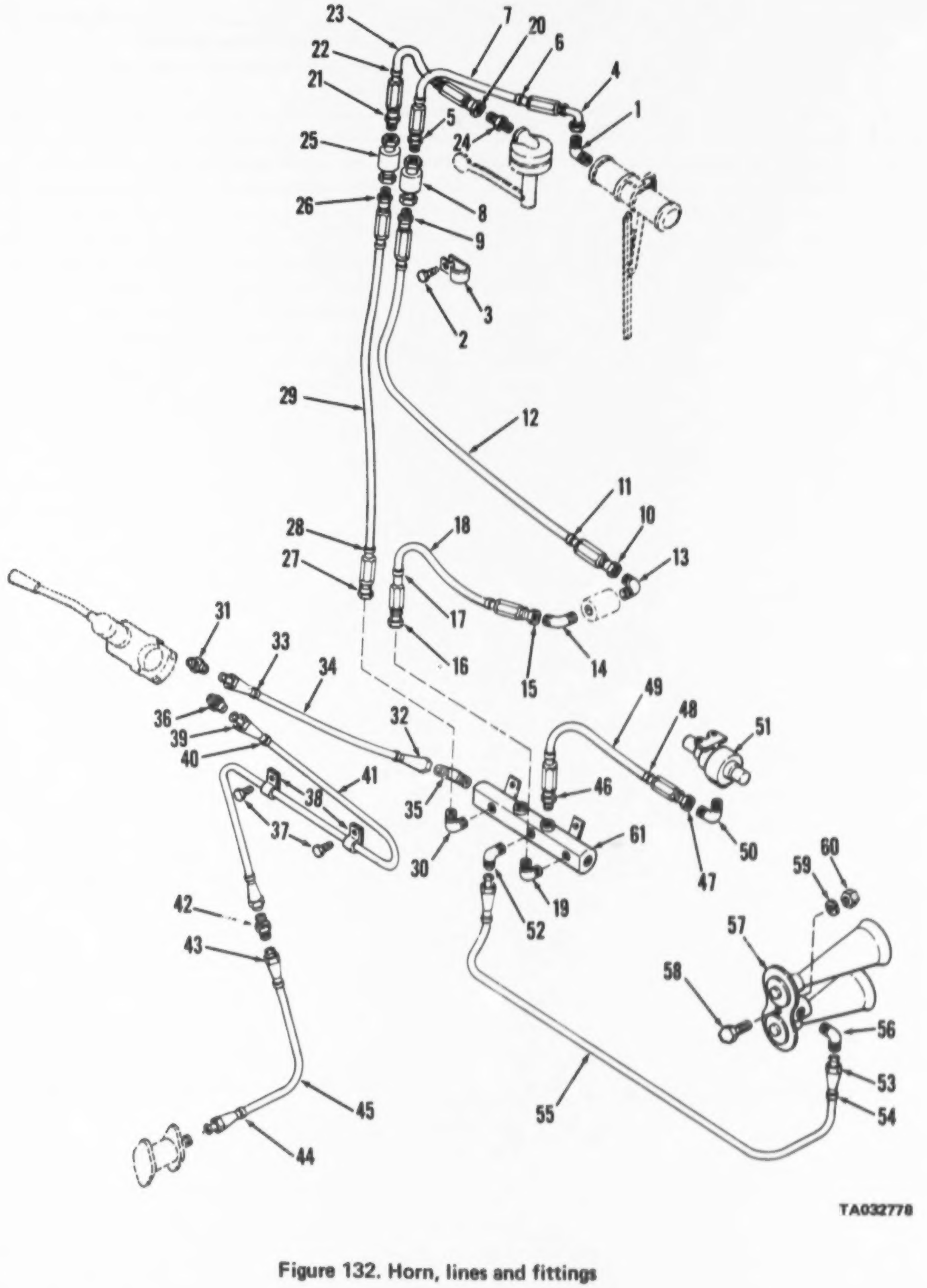

Figure 132. Horn, lines and fittings

(1) ILLUSTRATION (a) FIG NO.	(b) ITEM NO.	(2) SMR CODE	(3) NATIONAL STOCK NUMBER	(4) PART NUMBER	(5) FSCM	(6) DESCRIPTION USABLE ON CODE	(7) U/M	(8) QTY INC IN UNIT
						FUNCTIONAL GROUP 48 WINDSHIELD WIPER, PRESSURE INDICATOR,HORN,VALVES,LINES AND FITTINGS		
132	1	XBOZZ		2PA4ZMB	70434	.ELBOW 90 DEGREE MALE WNDSHLD WIPER HOSE	EA	1
132	2	PAOZZ	5305-00-432-4201	MS51861-45	96906	.SCREW,TAPPING NO 10-16X1/2 CLMP MTG	EA	1
132	3	PAOZZ	5340-00-921-6993	MS21334-32	96906	.CLAMP,LOOP 3/4 NOM DIA HOSE MTG	EA	1
132		MFOZZ		MS39263-4	96906	.HOSE ASSY WINDSHIELD WIPER	EA	1
132	4	XBOZZ		13218E5286-2	97403	..COUPLING HOSE WINDSHIELD WIPER HOSE	EA	1
132	5	XBOZZ	4730-01-046-1288	13215E7642-6	97403	..COUPLING HOSE WNDSHLD WPR HOSE	EA	1
132	6	PAOZZ	9905-00-935-3863	MS35020-28	96906	..BAND,MARKER HOSE	EA	2
132	7	PCOZZ		MS39262-4A	96906	..HOSE RUBBER 1/4 NOM	FT	1
132	8	XBOZZ	4730-00-449-5021	13205E3840	97403	.COUPLING,ASSEMBLY WINDSHIELD WIPER HOSE	EA	1
132		MFOZZ		MS39263-4	96906	.HOSE ASSY RUBBR WINDSHIELD WIPER	EA	1
132	9	XBOZZ		44031101	27315	..COUPLING HOSE TO WNDSHLD WIPER	EA	1
132	10	XBOZZ	4730-01-046-1288	13215E7642-6	97403	..ADAPTER,STRAIGHT TO WNDSHLD WIPER	EA	1
132	11	PAOZZ	9905-00-935-3863	MS35020-28	96906	..BAND,MARKER WNDSHLD WIPER HOSE	EA	2
132	12	PCOZZ		MS39262-4	96906	..HOSE,NONMETALLIC 1/4 NOM WINDSHIELD	FT	1
132	13	XDOZZ		2PA4ZMB	70434	.ELBOW TUBE 90 DEG MALE WNDSHLD WPR HOSE	EA	1
132	14	XBOZZ		44021502	27315	.ELBOW,TUBE 1-8-27X7-16-20-1/4TUBE WNDSHL WPR HOSE	EA	1
132		MFOZZ		MS39263-4	96906	.HOSE ASSY RBBR WNDSHLD WPR	EA	1
132	15	XBOZZ	4730-01-028-1583	13215E7641-1	97403	..ADAPTER,STRAIGHT WNDSHLD WIPER HOSE	EA	1
132	16	XBOZZ	4730-01-046-1288	13215E7642-6	97403	..ADAPTER,STRAIGHT WNDSHLD WPR HOSE	EA	1
132	17	PAOZZ	9905-00-935-3863	MS35020-28	96906	..BAND,MARKER HOSE	EA	2
132	18	PCOZZ		MS35262-4	96906	..HOSE,NONMETALLIC WNDSHLD WPR HOSE	FT	1
132	19	PAOZZ	4730-00-277-5553	340CX4	79470	.ELBOW,PIPE 90 DEGREE 1/4-18	EA	1
132		MFOZZ		MS39263-4	96906	.HOSE ASSY RBBR LOW PRESS INDCTR LINE	EA	1
132	20	XBOZZ	4730-01-046-1288	13215E7642-6	97403	..ADAPTER,STRAIGHT LOW PRESSURE INDCTR	EA	1
132	21	XBOZZ	4730-01-028-1583	13215E7641-1	97403	..ADAPTER,STRAIGHT LOW PRESS INDCTR HOSE	EA	1
132	22	PAOZZ	9905-00-935-3863	MS39020-28	96906	..BAND,MARKER LOW PRESS INDCTR HOSE	EA	2
132	23	PCOZZ		MS39262-4	96906	..HOSE,NONMETALLIC 1/4 NOM LOW PRESS	FT	1
132	24	XBOZZ	4730-00-266-0532	15F4J	70411	.ADAPTER,STRAIGHT 1-4 TUBE LOW PRESS INDCTR LINE	EA	1
132	25	XBOZZ	4730-00-449-5021	13205E3840	97403	.COUPLING,ASSEMBLY LOW PRESS INDCTR LINE	EA	1
132		MFOZZ		MS39263-4	96906	.HOSE ASSY RBBR LOW PRESS INDCTR	EA	1
132	26	XBOZZ	4730-01-028-1583	13215E7641-1	97403	..ADAPTER,STRAIGHT LOW PRESS INDCTR	EA	1
132	27	XBOZZ	4730-01-046-1288	13215E7642-6	97403	..ADAPTER,STRAIGHT LOW PRESS INDCTR HOSE	EA	1
132	28	PAOZZ	9905-00-935-3863	MS35020-28	96906	..BAND,MARKER LOW PRESS INDCTR HOSE	EA	1
132	29	PCOZZ		MS39262-4	96906	..HOSE,NONMETALLIC 1-4 NOM LOW PRESS	FT	1
132	30	XBOZZ	4730-00-254-6225	13205E3838-3	97403	.ELBOW,PIPE TO TUBE HOSE TO MANIFOLD	EA	1
132	31	XBOZZ	4730-00-266-0538	MS35869-2-3	96906	.ADAPTER,STRAIGHT 3/8 TUBE	EA	1
132		MFOZZ		WWT775	81349	.TUBE ASSY COP HAND BRAKE LINE V TO MANIFOLD	EA	1

(1) ILLUSTRATION (a) FIG NO.	(b) ITEM NO.	(2) SMR CODE	(3) NATIONAL STOCK NUMBER	(4) PART NUMBER	(5) FSCM	(6) DESCRIPTION USABLE ON CODE	(7) U/M	(8) QTY INC IN UNIT
132	33	PAOZZ	9905-00-935-3863	MS39020-28	96906	..BAND,MARKER TUBE ASSY....................................	EA	2
132	35	XOOZZ	4730-00-720-0119	49X6X8	79470	.ELBOW,PIPE TO TUBE 90 DEG MALE 1-2NPTFX5-8-18X3-8TUBE......	EA	1
132	36	XBOZZ	4730-00-266-0538	MS35869-2-3	96906	.ADAPTER,STRAIGHT 3-8 TUBE....................................	EA	1
132	37	PAOZZ	5305-00-432-4201	MS51861-45	96906	.SCREW,TAPPING NO 10-16X1-2....................................	EA	2
132	38	PAOZZ	5340-00-764-7051	MS21333-69	96906	.CLAMP,LOOP TUBE MTG....................................	EA	2
132		MFOZZ		WWT775	81349	.TUBE ASSY COP HAND BRAKE VALVE....................................	EA	1
132	39	PAOZZ	4730-00-011-8539	MS39167-5	96906	..NUT,TUBE COUPLING HAND BRAKE LINE....................................	EA	2
132	40	PAOZZ	9905-00-935-3863	MS39020-28	96906	..BAND,MARKER TUBE ASSEMBLY....................................	EA	2
132	42	XBOZZ	4730-00-265-6911	42X6	79470	.NIPPLE,TUBE 3-8ODX1/8 NPT....................................	EA	1
132		MFOZZ		WWT775	81349	.TUBE ASSY COP BRAKE VALVE TO CHK VALVE....................................	EA	1
132	44	PAOZZ	9905-00-935-3863	MS39020-28	96906	..BAND,MARKER BRAKE VALVE TO CHK VALVE.... ASSY..............	EA	2
132		MFOZZ		MS39263-4	96906	.HOSE ASSY RBR PRESS SWITCH LINE....................................	EA	1
132	48	PAOZZ	9905-00-935-3863	MS39020-28	96906	..BAND,MARKER PRESS SWITCH HOSE ASSY....................................	EA	2
132	50	PAOZZ	4730-00-254-6225	13205E3838-3	97403	..CLAMP,RIM CLENCHING 90 DEG PRESS SWITCH HOSE ASSY..........	EA	1
132	51	PAOZZ	5930-00-058-1576	MS27152-1	96906	.SWITCH,PRESSURE WARNING....................................	EA	1
132	52	PAOZZ	4730-00-254-6225	13205E3838-3	97403	.ELBOW,PIPE TO TUBE 90 DEG PRESS SWITCH HOSE ASSY............	EA	1
132		MFOZZ		WWT775	81349	.TUBE ASSY COP HORN AIR LINE....................................	EA	1
132	55	MPOZZ		820N55	27315	.TUBE ASSY COP HORN AIR LINE....................................	EA	1
132	56	XOOZZ		2MA42M8	70434	.ELBOW MALE 90 DEG HORN AIR LINES....................................	EA	1
132	57	PAOZZ	2590-00-900-1640	MS513C1-1	96906	.HORN SOUND AIR 28V DC CARRIER....................................	EA	1
132	58	PAOZZ	5305-00-267-8977	MS90726-10	96906	..SCREW CAP HEXAGON 1-4-28 HORN MTG....................................	EA	2
132	59	PAOZZ	5310-00-550-1130	MS35333-40	96906	..WASHER LOCK NO 4 HORN MTG....................................	EA	2
132	60	PAOZZ	5310-00-768-0319	MS51968-2	96906	..NUT,PLAIN,HEXAGON 1/4-28 HORN MTG....................................	EA	2
132	61	XBOZZ		840P1	27315	.MANIFOLD AIR CAN PIPING....................................	EA	1

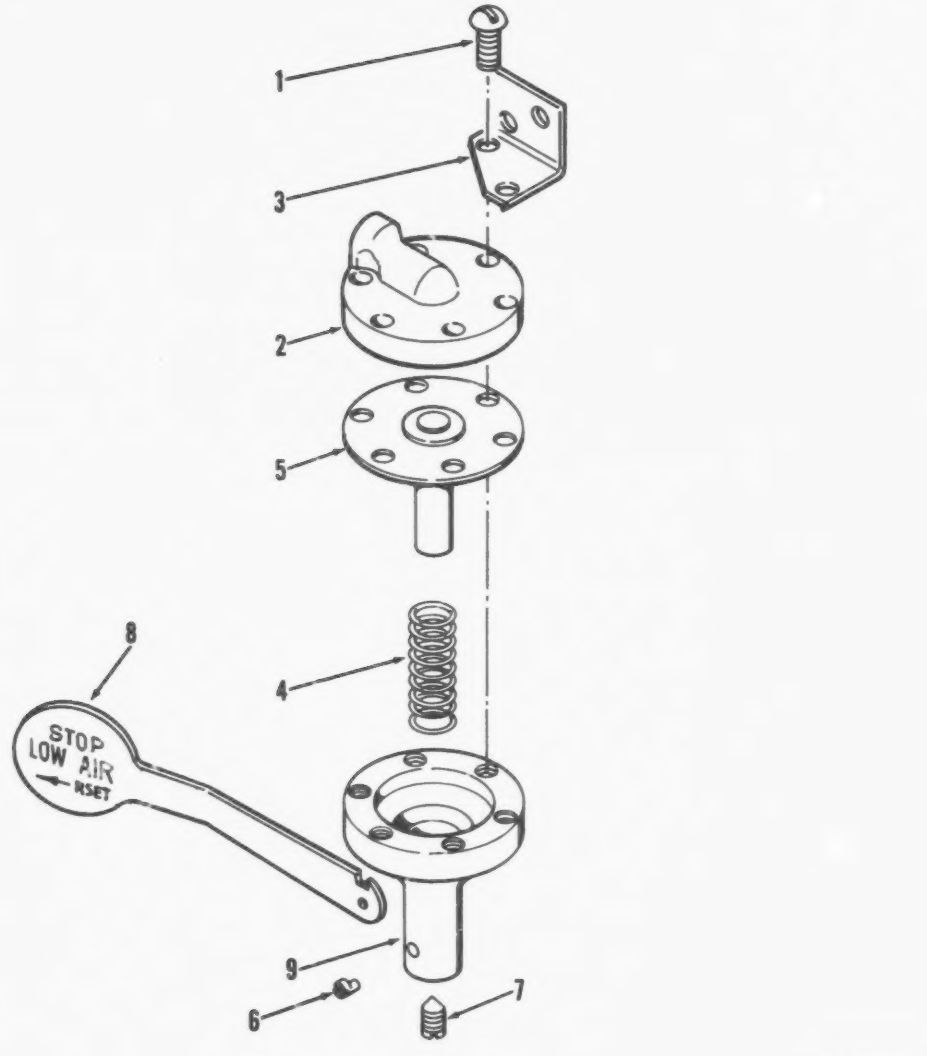

Figure 133. Indicator, air pressure

(1) ILLUSTRATION (a) FIG NO.	(b) ITEM NO.	(2) SMR CODE	(3) NATIONAL STOCK NUMBER	(4) PART NUMBER	(5) FSCM	(6) DESCRIPTION USABLE ON CODE	(7) U/M	(8) QTY INC IN UNIT
						FUNCTIONAL GROUP 48 WINDSHIELD WIPER, PRESSURE INDICATOR,HORN,VALVES,LINES AND FITTINGS		
133		PBOOD	6685-01-025-4131	0202-95-00	01606	.INDICATOR,LOW AIR SYSTEM..................................	EA	1
133	1	XBOZZ	5305-01-029-1187	0202-95-001	01606	..SCREW HOUSING MTG..	EA	1
133	2	XAOZZ		0202-95-002	01606	..HOUSING UPPER INDICATOR..................................	EA	1
133	3	XDOZZ		0202-95-009	01606	..BRACKET MTG INDICATOR MTG................................	EA	1
133	4	XDOZZ		0202-95-003	01606	..SPRING HLCPS DIAPHRAGM...................................	EA	1
133	5	PAOZZ		0202-95-004	01606	..DIAPHRAGM INDICATOR......................................	EA	1
133	6	PAOZZ	5305-01-028-8750	0202-95-007	01606	..SETSCREW CAM ATTACHING...................................	EA	1
133	7	PAOZZ		0202-95-006	01606	..STUD,ADJUSTING CAM PIVOT.................................	EA	1
133	8	XDOZZ		0202-95-008	01606	..PLATE INDICATOR..	EA	1
133	9	XAOZZ		0202-95-005	01606	..HOUSING LOWER INDICATOR..................................	EA	1

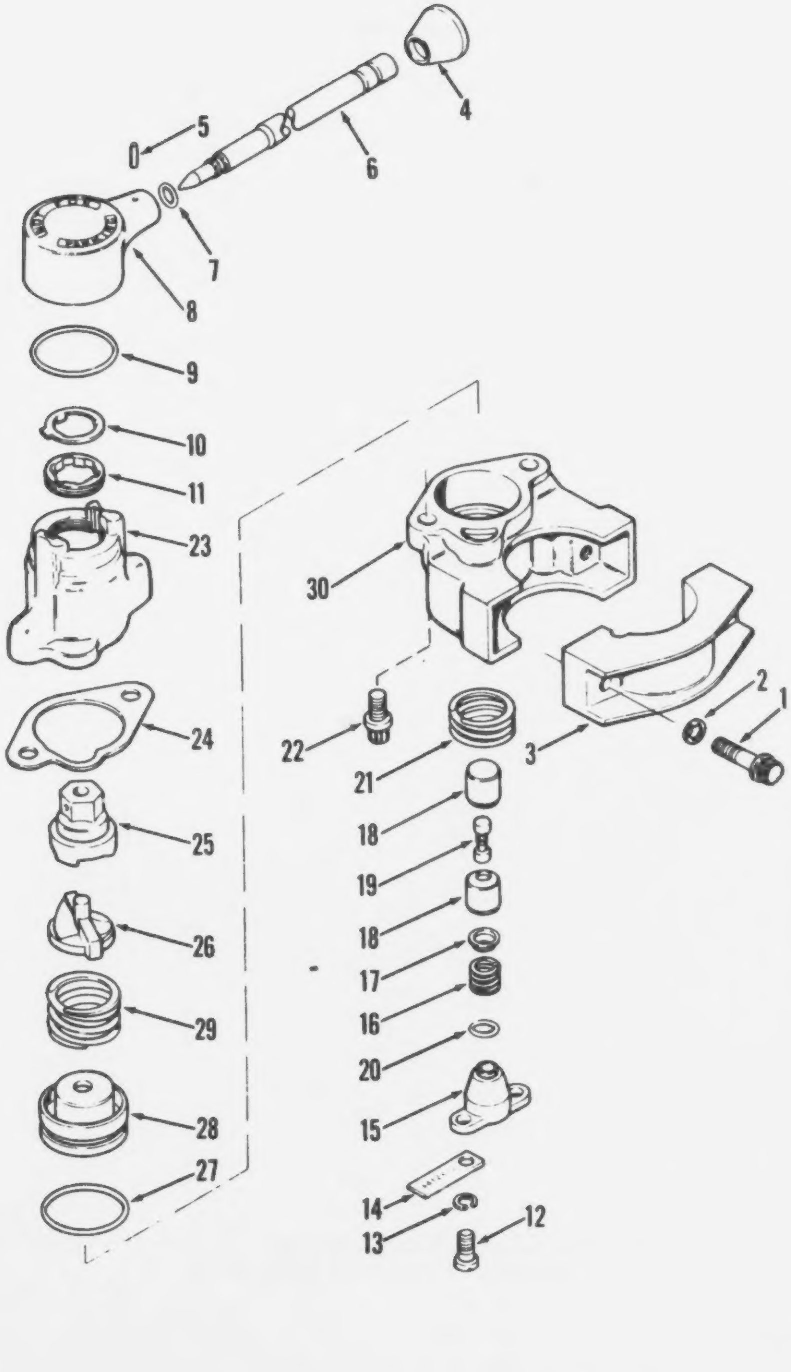

Figure 134. Valve assembly, brake actuating

(1) ILLUSTRATION (a) FIG NO.	(b) ITEM NO.	(2) SMR CODE	(3) NATIONAL STOCK NUMBER	(4) PART NUMBER	(5) FSCM	(6) DESCRIPTION USABLE ON CODE	(7) U/M	(8) QTY INC IN UNIT
						FUNCTIONAL GROUP 48 WINDSHIELD WIPER, PRESSURE INDICATOR, HORN, VALVES, LINES AND FITTINGS		
134		PBOFZ		7C10-06	06853	.VALVE ASSEMBLY MANUAL BRAKE ACTUATING........................	EA	1
134	1	PAOZZ	5306-00-519-6666	214607	06853	..BOLT,MACHINE 3/8-16 X 1-5/8................................	EA	1
134	2	PAOZZ	5310-00-763-0038	202583	06853	..WASHER,LOCK CLAMP MOUNTING.................................	EA	1
134	3	XBOZZ		234845	06853	..CLAMP,VALVE..	EA	1
134	4	XBOZZ	5355-00-221-6537	246726	06853	..KNOB HANDLE,VALVE..	EA	1

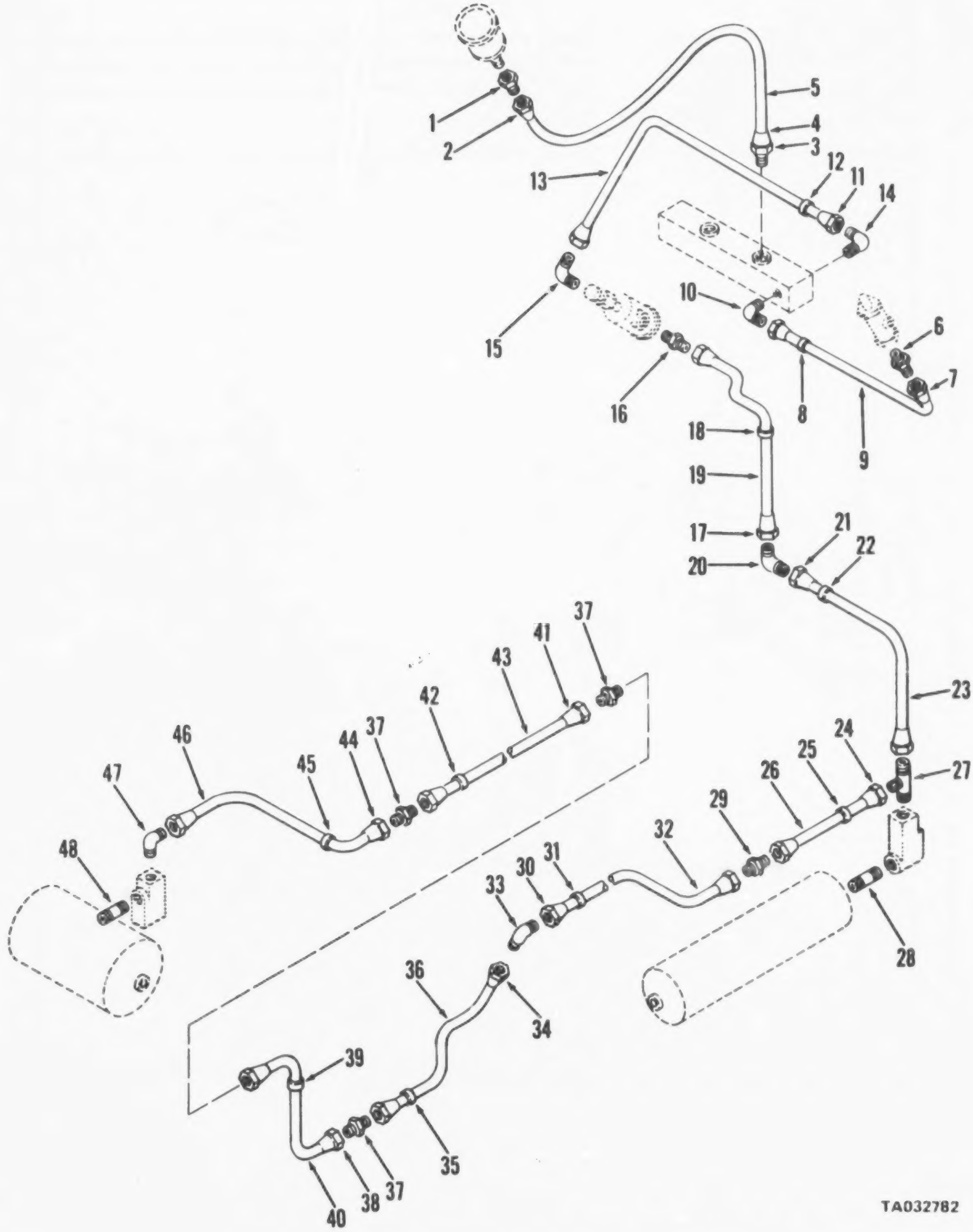

Figure 136. Hose and tube assemblies, reservoir exhaust

(1) ILLUSTRATION (a) FIG NO.	(b) ITEM NO.	(2) SMR CODE	(3) NATIONAL STOCK NUMBER	(4) PART NUMBER	(5) FSCM	(6) DESCRIPTION USABLE ON CODE	(7) U/M	(8) QTY INC IN UNIT
						FUNCTIONAL GROUP 49 VALVE ASSEMBLIES, RESERVOIR EXHAUST HOSES AND TUBE ASSEMBLIES		
136		PCOZZ	4720-01-028-1830	44021409	27315	.HOSE ASSEMBLY AIR GAGE..	EA	1
136	2	XBOZZ		13218E9286-2	97403	..COUPLING,HOSE:AIR AIR GAGE LINES............................	EA	1
136	3	XBOZZ	4730-01-046-1288	13215E7642-6	97403	..ADAPTER,STRAIGHT AIR GAGE HOSE ASSY.........................	EA	1
136	4	PAOZZ	9905-00-935-3863	MS39020-28	96906	..BAND,MARKER AIR GAGE HOSE ASSY..............................	EA	2
136	5	PCOZZ		MS39262-4	96906	..HOSE,NONMETALLIC AIR GAGE HOSE ASSY.........................	FT	1
136	6	XBOZZ	4730-00-266-0532	15F4J	70411	.ADAPTER,STRAIGHT DRAIN CONTROL VALVE HOSE ASSEMBLY..........	EA	1
136		MFOZZ		820P465	27315	.TUBE ASSY COP DRAIN CONTROL VALVE HOSE.......................	EA	1
136	10	XBOZZ	4730-00-254-6225	13205E3838-3	97403	.ELBOW,PIPE TO TUBE 90 DEG DRAIN CONTROL......................	EA	1
136		MFOZZ		820N60	27315	.TUBE ASSY COP PARK RELEASE AIR LINE..........................	EA	1
136	14	XBOZZ	4730-00-254-6225	13205E3838-3	97403	.ELBOW,PIPE TO TUBE 90 DEG PARK RELEASE.......................	EA	1
136	15	XDOZZ		2MA4ZMB	70434	.ELBOW MALE 90 DEG PARK RELEASE VALVE AIR.....................	EA	1
136	16	XBOZZ	4730-00-266-0532	15F4J	70411	.ADAPTER,STRAIGHT PARK RELEASE VALVE AIR......................	EA	1
136		MFOZZ		820P496	27315	.TUBE ASSY COP PARK RELEASE VALVE AIR LINE: CIRCUIT 204H.....	EA	1
136	20	XBOZZ	4730-00-891-9967	55X4	79470	.ELBOW TUBE 1/4 PARK RELEASE VALVE AIR........................	EA	1
136		MFOZZ		820P428	27315	.TUBE ASSY COP PARK RELEASE VALVE LINE........................	EA	1
136	22	PAOZZ	9905-00-935-3863	MS39020-28	96906	..BAND MARKER PARK RELEASE VALVE LINE 204A....................	EA	2
136		MFOZZ		820N46	27315	..TUBE ASSY COP RESERVOIR EXHAUST LINE........................	EA	1
136	25	PAOZZ	9905-00-935-3863	MS39020-28	96906	..BAND MARKER EXHAUST RESERVOIR TUBE ASSY.CIRCUIT 204B.......	EA	2
136	27	PAOZZ	4730-00-401-7131	13205E3874-1	97403	.TEE,PIPE TO TUBE EXHAUST RESERVOIR LINE......................	EA	1
136	28	XBOZZ	4730-00-222-1840	MS51846-77	96906	.NIPPLE PIPE 3-4PIPEX1-3-8 EXHAUST RESERVOIR CIRCUIT 204.....	EA	1
136	29	XBOZZ	4730-00-764-8771	42X4	79470	.NIPPLE,TUBE EXHAUST RESERVOIR CIRCUIT 204....................	EA	1
136		MFOZZ		820N3902	27315	.TUBE ASSY COP EXHAUST RESERVOIR CIRCUIT......................	EA	1
136	31	PAOZZ	9905-00-935-3863	MS39020-28	96906	..MARKER BAND EXH RESERVOIR CIRCUIT 204.......................	EA	2
136	33	XBOZZ	4730-00-618-5382	4R6RX5	45681	.TEE,TUBE EXH RESERVOIR CIRCUIT 204D..........................	EA	1
136		MFOZZ		820N6502	27315	.TUBE ASSY COP EXH RESERVOIR CIRCUIT 204D.....................	EA	1
136	35	PAOZZ	9905-00-935-3863	MS39020-28	96906	..BAND MARKER EXH RESERVOIR CIRCUIT 204D......................	EA	2
136	37	XBOZZ	4730-00-764-8771	42X4	79470	.NIPPLE,TUBE EXH RESERVOIR CIRCUIT 204D.......................	EA	3
136		MFOZZ		820P48002	27315	.TUBE ASSY COP EXH RESERVOIR CIRCUIT 204E.....................	EA	1
136		MFOZZ		820P407	27315	.TUBE ASSY COP EXH RESERVOIR CIRCUIT 204F.....................	EA	1
136		MFOZZ		820P406	27315	.TUBE ASSY COP EXH RESERVOIR CIRCUIT 204G.....................	EA	1
136	39	PAOZZ	9905-00-935-3863	MS39020-28	96906	..BAND MARKER EXH RESERVOIR CIRCUIT 204E TUBE ASSY..........	EA	2
136	46	PAOZZ	4710-00-277-5525	WWT775	81349	..TUBE,COPPER EXH RESERVOIR CIRCUIT 204G..BE ASSY:1/4 OD X 0.030 WALL THK33 IN LG.......................................	FT	V
136	47	PAOZZ	4730-00-254-6225	13205E3838-3	97403	.ELBOW,PIPE TO TUBE 90 DEG EXH RESERVOIR..	EA	1
136	48	PAOZZ	4730-00-222-1840	MS51846-77	96906	.NIPPLE PIPE 3-4 PIPEX1-3-8 EXH RESERVOIR.-CIRCUIT 204G......	EA	1

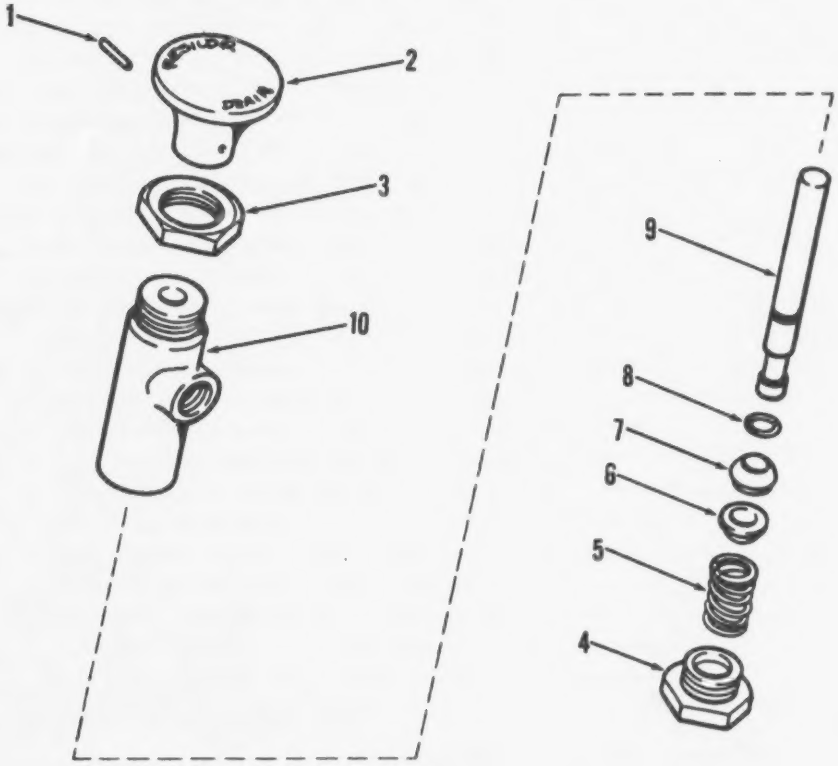

Figure 137. Valve assembly, drain

(1) ILLUSTRATION (a) FIG NO	(b) ITEM NO	(2) SMR CODE	(3) NATIONAL STOCK NUMBER	(4) PART NUMBER	(5) FSCM	(6) DESCRIPTION USABLE ON CODE	(7) U/M	(8) QTY INC IN UNIT
						FUNCTIONAL GROUP 49 VALVE ASSEMBLIES, RESERVOIR EXHAUST HOSES AND TUBE ASSEMBLIES		
137		PAOOO	2530-00-929-5517	277C0C	06853	.VALVE,CONTROL DRAIN	EA	1
137	1	XAOZZ		241556	06853	..PIN, SPRING BUTTON HOLDING	EA	1
137	2	XDOZZ		241830	06853	..BUTTON, VALVE ACTUATING	EA	1
137	3	XAOZZ		234333	06853	..NUT BODY MOUNTING	EA	1
137	4	XAOZZ		234840	06853	..NUT, PLAIN, CAP END CAP	EA	1
137	5	XAOZZ		235729	06853	..SPRING, HELICAL VALVE HOLDING	EA	1
137	6	XAOZZ		238687	06853	..SEAT, VALVE SPRING	EA	1
137	7	XAOZZ		238686	06853	..VALVE INLET	EA	1
137	8	PAOZZ	5330-00-456-C362	234305	06853	..PACKING, PREFORMED STEM SEAL	EA	1
137	9	XAOZZ		241825	06853	..STEM, NEEDLE VALVE	EA	1
137	10	XAOZZ		241828	C6853	..BODY, VALVE DRAIN	EA	1

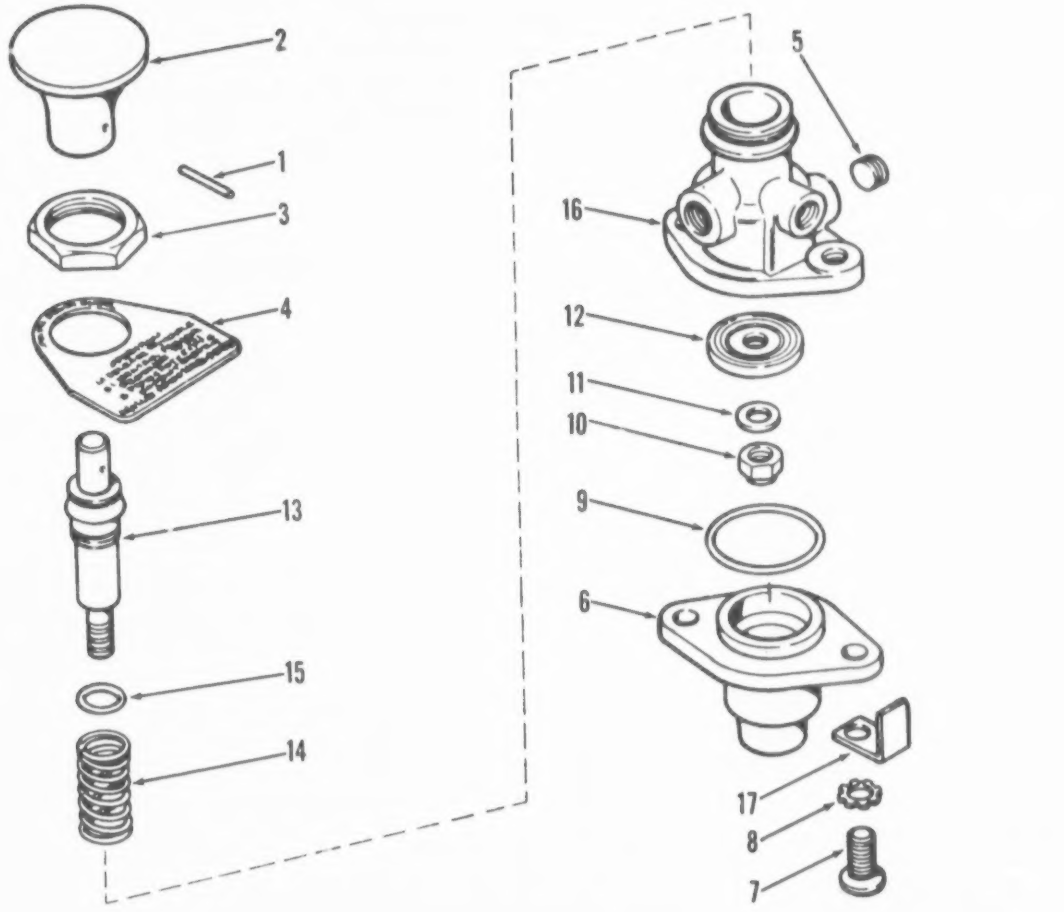

Figure 138. Valve, park release control

(1) ILLUSTRATION (a) FIG NO.	(b) ITEM NO.	(2) SMR CODE	(3) NATIONAL STOCK NUMBER	(4) PART NUMBER	(5) FSCM	(6) DESCRIPTION USABLE ON CODE	(7) U/M	(8) QTY INC IN UNIT
						FUNCTIONAL GROUP 49 VALVE ASSEMBLIES, RESERVOIR EXHAUST HOSES AND TUBE ASSEMBLIES		
138	1	XAOZZ		238379	06853	..PIN SPRING PUSH BUTTON HOLDING	EA	1
138	2	PAOZZ	4820-00-412-3798	241866	06853	..BUTTON PUSH PLUNGER ACTUATING	EA	1
138	3	XBOZZ		239315	06853	..NUT SPECIAL VALVE MTG	EA	1
138	4	XBOZZ		244567	06853	..PLATE INSTR VALVE	EA	1
138	5	XBOZZ	5340-00-410-6032	210050	06853	..PLUG PIPE BODY SEAL	EA	1
138		XDOZZ		7021-15	06853	..VALVE ASSY PARKING	EA	1
138	6	XAOZZ		240283	06853	...COVER VALVE	EA	1
138	7	XAOZZ		238501	06853	...SCREW,MACHINE COVER MTG	EA	2
138	8	XAOZZ		235383	06853	...WASHER,LOCK COVER MTG	EA	2
138	9	XAOZZ		240480	06853	...GASKET COVER SEAL	EA	1
138	10	XAOZZ		230401	06853	...NUT SLFLKNG VALVE ATTACHING	EA	2
138	11	XAOZZ		202678	06853	...WASHER,FLAT VALVE MTG	EA	1
138	12	XAOZZ		240277	06853	...VALVE AIR	EA	1
138	13	XAOZZ		240273	06853	...PLUNGER VALVE QUICK RELEASE	EA	1
138	14	XAOZZ		240285	06853	...SPRING HCPS PLUNGER HOLDING	EA	1
138	15	XAOZZ		240580	06853	...PACKING PREMD PLUNGER SEAL	EA	1
138	16	XAOZZ		240381	06853	...BODY VALVE	EA	1
138	17	XBOZZ		245704	06853	..TAG MARKER VALVE IDENTIFICATION	EA	1

AMC FORM 1779, 1 OCT 73 (REPLACES AMC TEST FORMS 1753 AND 1754, 6 APR 70, WHICH WILL BE USED UNTIL 1 JUL 74)

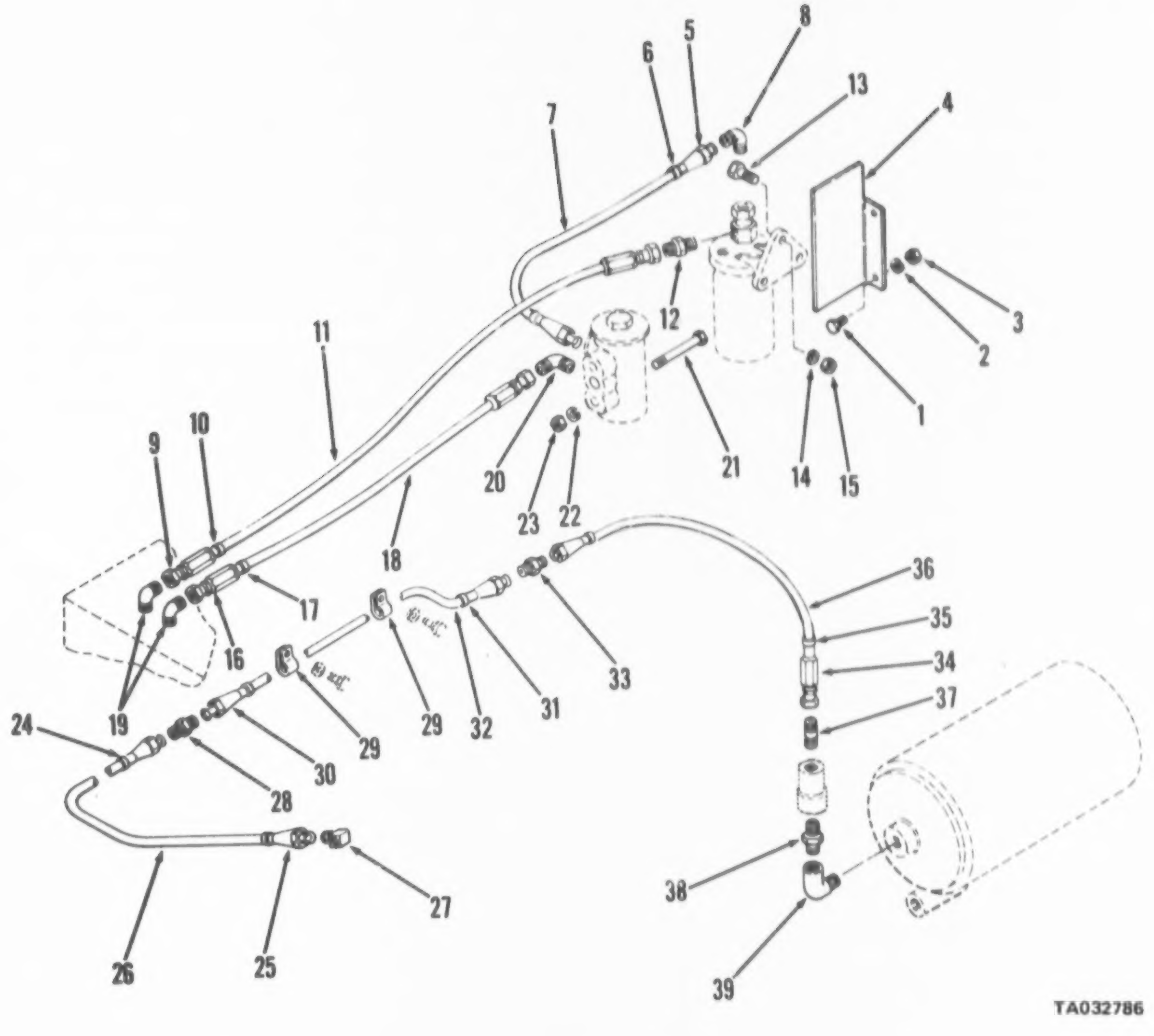

Figure 140. Hose and tube assemblies, compressor

(1) ILLUSTRATION (a) FIG NO	(b) ITEM NO	(2) SMR CODE	(3) NATIONAL STOCK NUMBER	(4) PART NUMBER	(5) FSCM	(6) DESCRIPTION USABLE ON CODE	(7) U/M	(8) QTY INC IN UNIT
						FUNCTIONAL GROUP 50 GOVERNOR,EVAPORATOR, VALVES,HOSE AND TUBE ASSEMBLIES,AIR COMPRESSOR SYSTEM		
140	1	XBOZZ	5305-00-225-3840	MS90725-7	96906	.SCREW,CAP,HEXAGON 1-4-20X7-8 AGH EVAP..........................	EA	2
140	2	XBOZZ	5310-00-582-5965	MS35338-44	96906	.WASHER,LOCK 1-4 ALCH EVAP GUARD MTG..........................	EA	2
140	3	XBOZZ	5310-00-761-6882	MS51967-2	96906	.NUT,PLAIN,HEXAGON 1-4-20 ALCH EVAP GUARD,MTG................	EA	2
140	4	XDOZZ		818T589	27315	.GUARD ALCH EVAP..	EA	1
140		MFOFF		820P499	27315	.TUBE ASSEMBLY, EVAPORATOR CHECK VALVE........................	EA	1
140	5	PAOZZ	4730-00-011-8539	MS39167-5	96906	..NUT,TUBE COUPLING CHK VALVE TO GOV TUBE.....................	EA	2
140	7	AOOZZ		WWT775	81349	..TUBE ASSY COP EVAP CHK VALVE TO GOVERNORCIRCUIT 210D.......	EA	1
140	8	PAOZZ	4730-00-256-6227	49X6X2	79470	.ELBOW,PIPE TO TUBE 90DEG 1-8-27X5-8-18.........................	EA	1
140		MFOFF		44Q25802	27315	.HOSE ASSEMBLY CHECK VALVE, CIRCUIT 210H......................	EA	1
140	12	XBOZZ	4730-00-266-0532	19F4J	70411	.ADAPTER,STRAIGHT CHK VALVE TO COM-CIRCUIT 210H..............	EA	1
140	13	XBOZZ	5305-00-225-3840	MS90725-7	96906	.SCREW,CAP,HEXAGON 1-4-20 ALC EVAP MTG........................	EA	3
140	14	XBOZZ	5310-00-582-5965	MS35338-44	96906	.WASHER,LOCK 1-4 ALC EVAP MTG..................................	EA	3
140	15	XBOZZ	5310-00-761-6882	MS51967-2	96906	.NUT,PLAIN,HEXAGON 1-4-20 ALC EVAP MTG........................	EA	3
140		MFOZZ		44Q25801	27315	.HOSE ASSY RBR GOV TO AIR COMP-CIRCUIT 210....................	EA	1
140	17	PAOZZ	9905-00-935-7777	MS39020-29	96906	..BAND,MARKER GOV TO COMPRESSOR HOSE ASSY.....................	EA	2
140	18	MFOZZ		MS35262-6	96906	..HOSE ASSY RBR CHK VALVE TO COMPRESSOR.......................	EA	1
140	19	XBOZZ		2BA47B8	70436	.ELBOW TUBE MALE 90DEG-1-4TUBE-1-8 PIPE........................	EA	2
140	20	XOOZZ		56X4	79470	.FITTING TUBE M 45DEG 1-8-27NPTFX7-16-20.......................	EA	1
140	21	XBOZZ	5305-00-071-2232	MS90725-19	96906	.SCREW,CAP,HEXAGON 1-4-20X3-1-4 GOVERNOR..TG..................	EA	2
140	22	XDOZZ	5310-00-582-5965	MS35338-44	96906	.WASHER,LOCK 1-4 GOVERNOR MTG..................................	EA	2
140	23	XBOZZ	5310-00-761-6882	MS51967-2	96906	.NUT,PLAIN,HEXAGON 1-4-20 GOVERNOR MTG........................	EA	2
140		MFOFF		820P474	27315	.TUBE ASSEMBLY COPPER, AIR PIPING CIRCUIT,210A...............	EA	1
140	24	PFOZZ	9905-00-935-3863	MS39020-28	96906	..BAND,MARKER TUBE ASSY AIR PP CKT 210A......................	EA	2
140	25	PAOZZ	4730-00-011-6478	MS39167-8	96906	..NUT,TUBE COUPLING TUBE ASSY AIR PP CKT..0A..................	EA	2
140	27	XBOZZ	4730-00-921-3245	8BA10ZMB	70434	.ELBOW,PIPE TO TUBE 5-8 TUBE TO 1-2 PIPE.......................	EA	1
140	28	PAOZZ	4730-00-277-3874	MS39157-8	96906	.NIPPLE TUBE 5-8 TUBE TO TUBE AIR PP CKT......................	EA	1
140	29	PAOZZ	5340-00-CBB-1256	MS21333-104	96906	.CLAMP,LOOP 5-8 TUBE RTNG.....................................	EA	2
140		MFOZZ		820P473	27315	.TUBE ASSEMBLY AIR PP CKT 210 AIR COMP....................... 5/8"ODX.035WALLX37.00LG....................................	EA	1
140	31	PFOZZ	9905-00-935-3863	MS39020-28	96906	..BAND,MARKER TUBE ASSY AIR PP CKT 210C.......................	EA	2
140	33	XBOZZ	4730-00-277-3874	MS39157-8	96906	.NIPPLE,TUBE 5-8TUBE-AIR PP CKT 210...........................	EA	1
140	35	PEOZZ	9905-00-935-7777	MS39020-29	96906	..BAND,MARKER TUBE ASSY AIR PP CKT............................	EA	2
140	36	PCOZZ		MS39268-8	96906	..HOSE RUBBER HOSE ASSY..	FT	V
140	37	XBOZZ	4730-00-266-0543	MS35869-4-5	96906	.ADAPTER,STRAIGHT 5-8 AIR PP CKT 210..........................	EA	1
140	38	XBOZZ	4730-00-272-1839	MS51846-58	96906	.NIPPLE PIPE 1-2X1-1-8 CLOSE-CHK VALVE........................	EA	1
140	39	XBOZZ	4730-01-007-3664	13218E0114-15	97403	.ELBOW,PIPE 90DEG NPTF-1-2-14 CHK VALVE.......................	EA	1

AMC FORM 1775, 1 OCT 73 (REPLACES AMC TEST FORMS 1753 AND 1754, 6 APR 70, WHICH WILL BE USED UNTIL 1 JUL 74)

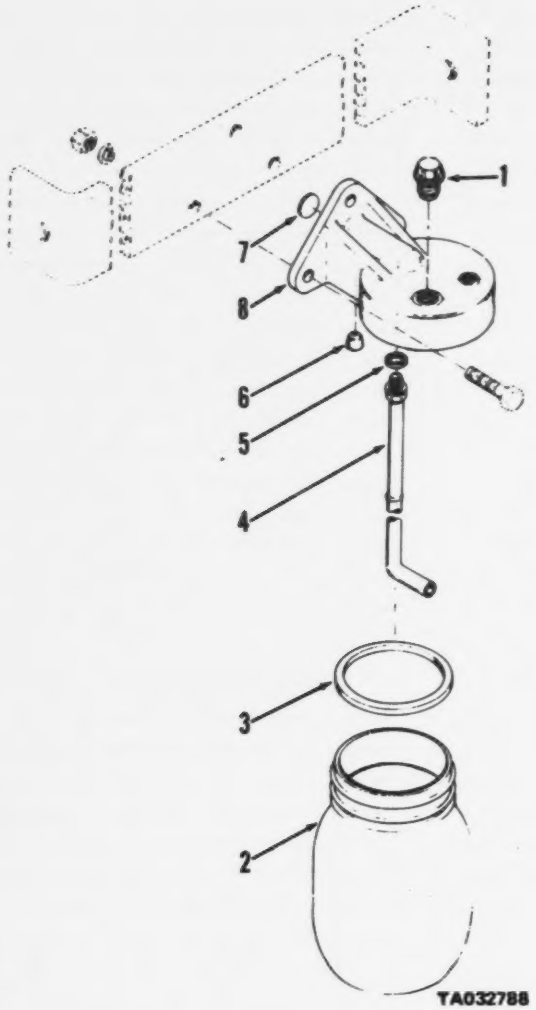

Figure 142. Evaporator assembly, alcohol

(1) ILLUSTRATION		(2)	(3)	(4)	(5)	(6)	(7)	(8)
(a) FIG NO.	(b) ITEM NO.	SMR CODE	NATIONAL STOCK NUMBER	PART NUMBER	FSCM	DESCRIPTION USABLE ON CODE	U/M	QTY INC IN UNIT
						FUNCTIONAL GROUP 50 GOVERNOR,EVAPORATOR, VALVES,HOSE AND TUBE ASSEMBLIES,AIR COMPRESSOR SYSTEM		
142		PBOOZ	2530-00-133-9971	7C21-03	06853	.EVAPORATOR ALC AIR PP SYSTEM................................	EA	1
142	1	XDOZZ	2530-00-401-8143	243939	06853	..PLUG FILLER ALC EVAP.......................................	EA	1
142	2	PBOZZ	2530-00-755-7198	238956	06853	..RESERVOIR ALC 1 PT PLASTIC JAR.............................	EA	1
142	3	PAOZZ	5330-00-755-7191	243540	06853	..GASKET RSVR ALC EVAP.......................................	EA	1
142	4	XAOZZ		243937	06853	..TUBE COPPER ACL EVAPORATING................................	EA	1
142	5	XDOZZ	5330-00-733-4599	236728	06853	..RING,SEALING EVAPORATOR TUBE...............................	EA	1
142	6	XDOZZ	2530-00-856-3542	239135	06853	..FILTER AIR ALC EVAP..	EA	1
142	7	XDOZZ	5340-00-234-4902	242221	06853	..PLUG EXPANSION ALC EVAP....................................	EA	1
142	8	XAOZZ		242141	06853	..BODY ALC EVAP..	EA	1

best copy available

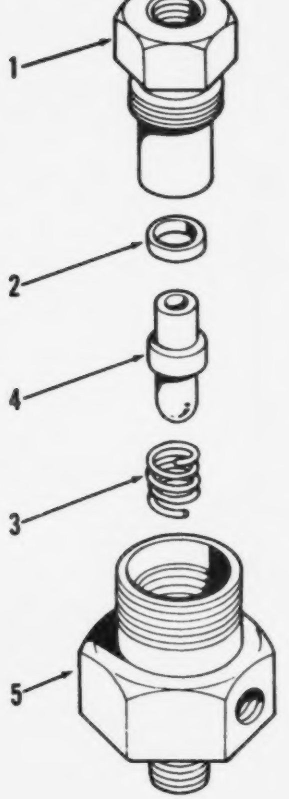

Figure 143. Valve, check; alcohol evaporator

(1) ILLUSTRATION (a) FIG NO.	(b) ITEM NO.	(2) SMR CODE	(3) NATIONAL STOCK NUMBER	(4) PART NUMBER	(5) FSCM	(6) DESCRIPTION USABLE ON CODE	(7) U/M	(8) QTY INC IN UNIT
						FUNCTIONAL GROUP 50 GOVERNOR,EVAPORATOR, VALVES,HOSE AND TUBE ASSEMBLIES,AIR COMPRESSOR SYSTEM		
143		PAOZZ	4820-00-411-5457	7023-01	06853	.VALVE CHECK ALCOHOL EVAP	EA	1
143	1	XAOZZ		240909	06853	..NUT PLAIN CAP VALVE RTNG	EA	1
143	2	XAOZZ		240908	06853	..PACKING,PREFORMED CHECK VALVE	EA	1
143	3	XAOZZ		240906	06853	..SPRING HELPS VALVE LOADING	EA	1
143	4	XAOZZ		240907	06853	..VALVE CHECK	EA	1
143	5	XAOZZ		240505	06853	..BODY VALVE	EA	1

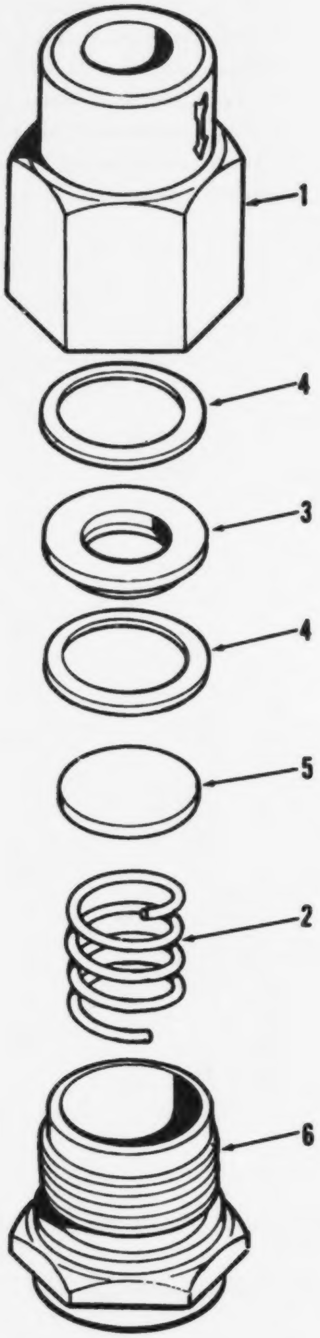

TA032790

Figure 144. Valve, check; air reservoir

(1) ILLUSTRATION (a) FIG NO.	(b) ITEM NO.	(2) SMR CODE	(3) NATIONAL STOCK NUMBER	(4) PART NUMBER	(5) FSCM	(6) DESCRIPTION USABLE ON CODE	(7) U/M	(8) QTY INC IN UNIT
						FUNCTIONAL GROUP 50 GOVERNOR,EVAPORATOR, VALVFS,HOSE AND TUBE ASSEMBLIES,AIR COMPRESSOP SYSTEM		
144		PAOZZ	4820-01-025-0340	227703	06853	.VALVE CHECK AIR RSVR	EA	1
144	1	XAOZZ		237990	06853	..NUT CAP AIR RSVR CHK VALVE	EA	1
144	2	XAOZZ		237594	06853	..SPRING HLCPS CHK VALVF	EA	1
144	3	XAOZZ		203102	06853	..VALVE DISCHAPGE CHK VALVE	FA	1
144	4	XAOZZ		238175	06853	..WASHER FLAT RD CHK VALVE	EA	2
144	5	XAOZZ		237992	06853	..SEAT VALVE CHK VALVE	EA	1
144	6	XAOZZ		282884	06853	..BODY VALVE CHK VALVE	EA	1

AMC FORM 1779, 1 OCT 73 (REPLACES AMC TEST FORMS 1753 AND 1754, 8 APR 70, WHICH WILL BE USED UNTIL 1 JUL 74) REPAIR PARTS LIST

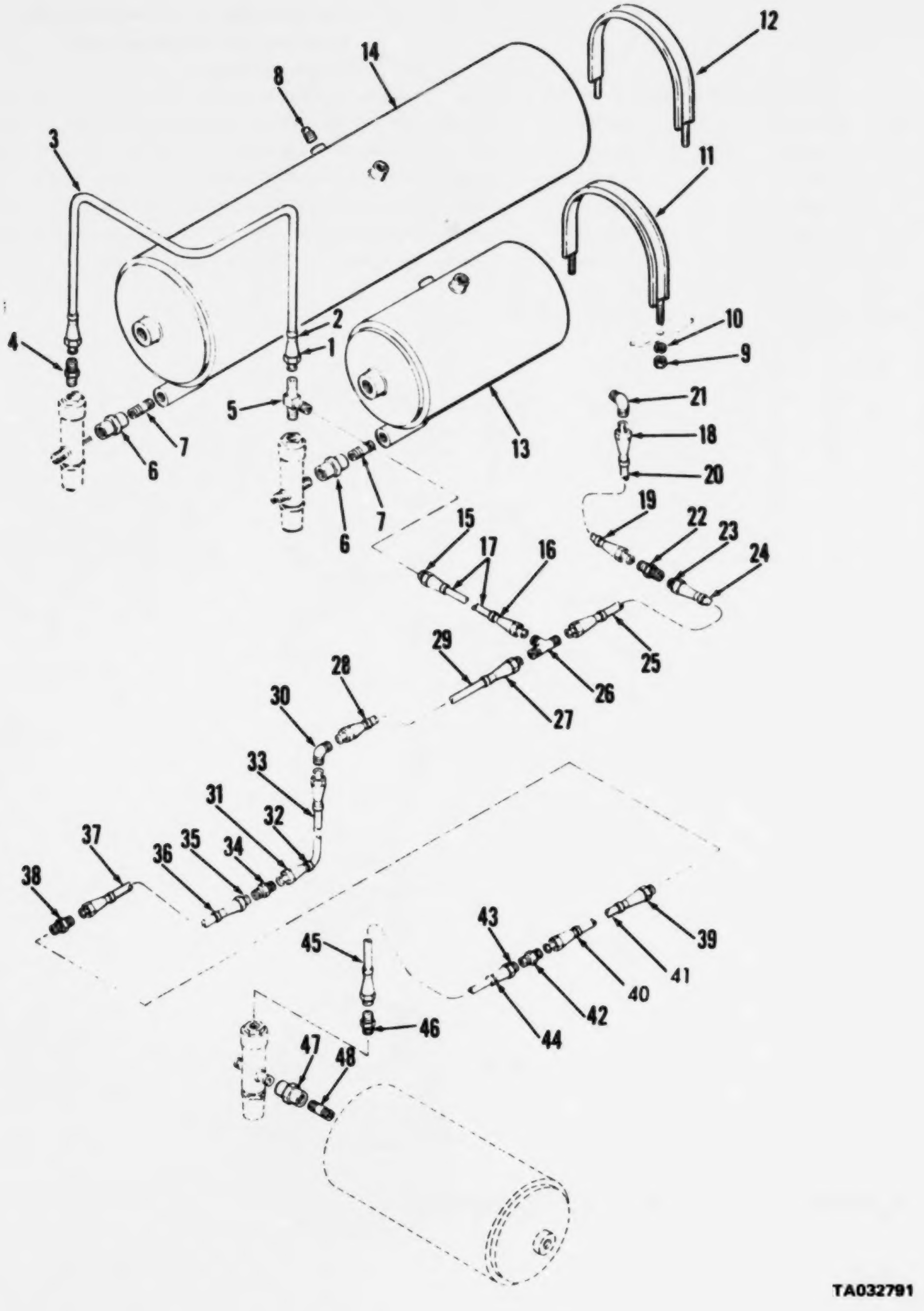

Figure 145. Air reservoir and drain tube assemblies

(1) ILLUSTRATION (a) FIG NO.	(b) ITEM NO.	(2) SMR CODE	(3) NATIONAL STOCK NUMBER	(4) PART NUMBER	(5) FSCM	(6) DESCRIPTION USABLE ON CODE	(7) U/M	(8) QTY INC IN UNIT
						FUNCTIONAL GROUP 51 AIR RESERVOIR AND DRAIN TUBE ASSEMBLIES,BRAKE SYSTEM		
145		MFOZZ		820P4C8	27315	.TUBE ASSY COP AIR PP CKT 207C	EA	1
145	4	PAOZZ	4730-00-391-3771	48X4X4	79470	.ADAPTER,STRAIGHT 1/4 TUBE TO DRAIN VALVE	EA	1
145	5	PAOZZ	4730-00-401-7131	132C5E3874-1	97403	.TEE,PIPE TO TUBE 1/4-18X7/16-20 AIR PP	EA	1
145	6	PAOZZ	4730-00-277-5736	103B1-4	30327	.COUPLING,PIPE; 1-4-18,TUBE TO AIR RSVR	EA	2
145	7	PAOZZ	4730-00-193-2709	MS51846-24	96906	.NIPPLE,PIPE 1-4X1-1-2 TUBE TO AIR RSVR	EA	2
145	8	PAOZZ	4730-00-014-7863	233057	06853	.PLUG PIPE AIR RESERVOIR	EA	1
145	9	PAOZZ	5310-00-732-0558	MS51967-8	96906	.NUT,PLAIN,HEXAGON AIR RSVR CLAMP MTG	EA	8
145	10	PAOZZ	5310-00-637-9541	MS35338-46	96906	.WASHER,LOCK AIR RSVR CLAMP MTG	EA	8
145	11	XDOZZ		820T543	27315	.U-BOLT 3-8-16X2-1-2THD-RSVR MTG	EA	2
145	12	XDOZZ		820T545	27315	.U-BOLT 3-8-16X2-1-2-AIR RSVR MTG	EA	2
145		MFOZZ		820P421	27315	.TUBE ASSY COP AIR PP CKT 207B	EA	1
145	16	PAOZZ	9905-00-935-3863	MS39020-28	96906	..BAND,MARKER TUBE ASSY-AIR PP CKT 207B	EA	2
145	17	MFOZZ		WWT775	81349	..TUBE COPPER TUBE ASSY-AIR PP CKT 207B... FR 1-4ODX0.030WALLX4.5"LGCOP TU	FT	V
145		MFOZZ		820N53	27315	.TUBE ASSY COP AIR PP CKT 207L AIR RSVR	EA	1
145	19	PAOZZ	9905-00-935-3863	MS39020-28	96906	..BAND,MARKER RSVR TO DRAIN CONTROL VALVE.UBE ASSY	EA	2
145	21	XBOZZ	4730-00-231-5632	10F4J	70411	.ELBOW,PIPE TO TUBE 90DEG 1-4TUBE-1-8PIPE.TUBE TO DRN CNTL VALVE-CKT 207L	EA	1
145	22	XBOZZ	4730-00-764-8771	42X4	79470	.NIPPLE,TUBE 1-4 TUBE AIR PP CKT 207A	EA	1
145		MFOZZ		820P4E6	27315	.TUBE ASSY COP TUBE TO TEE-AIR RSVR-AIR	EA	1
145	24	PAOZZ	9905-00-535-3863	MS39020-28	96906	..BAND,MARKER TUBE ASSY-AIR PP CKT 207A	EA	2
145	26	PAOZZ	4730-00-287-1561	44Z275D3	27315	.TEE TUBE AIR PP CKT 207A	EA	1
145		MFOZZ		820A35D1	27315	.TUBE ASSY COP AIR PP CKT 207D	EA	1
145	28	PAOZZ	9905-00-935-3863	MS39020-28	96906	..BAND,MARKER TUBE ASSY-AIR PP CKT 207D	EA	2
145		MFOZZ		820N34D1	27315	.TUBE ASSY COP TO AIR RSVR-AIR PP CKT 207F	EA	1
145	32	PAOZZ	9905-00-935-3863	MS39020-28	96906	..BAND,MARKER TUBE ASSY-AIR PP CKT207F	EA	2
145	34	XBOZZ	4730-00-764-8771	42X4	79470	.NIPPLE,TUBE AIR PP CKT 207F	EA	1
145		MFOZZ		820P4E0D1	27315	.TUBE ASSY COP TO AIR RSVR-AIR PP CKT 207G	EA	1
145	36	PAOZZ	9905-00-935-3863	MS39020-28	96906	..BAND,MARKER TUBE ASSY-AIR PP CKT 207G	EA	2
145	38	XBOZZ	4730-00-764-8771	42X4	79470	.NIPPLE,TUBE AIR PP CKT 207H	EA	1
145		MFOZZ		820P412	27315	.TUBE ASSEMBLY AIR PP CKT 207H	EA	1
145	40	PAOZZ	9905-00-935-3863	MS39020-28	96906	..BAND,MARKER TUBE ASSY-AIR PP CKT 207H	EA	2
145	42	XBOZZ	4730-00-764-8771	42X4	79470	.NIPPLE,TUBE AIR PP CKT 207H	EA	2
145		MFOZZ		820P413	27315	.TUBE ASSY COP AIR PP CKT 207K	EA	1
145	44	PFOZZ	9905-00-935-3863	MS39020-28	96906	..BAND,MARKER TUBE ASSY-AIR CKT 207K	EA	1
145	46	PAOZZ	4730-00-391-3771	48X4X4	79470	.ADAPTER,STRAIGHT 1-4 TUBE TO DRAIN VALVE	EA	1
145	47	XDOZZ	4730-00-277-5736	103B1-4	30327	.COUPLING TUBE VALVE TO RSVR-AIR PP CKT...7K	EA	1
145	48	PAOZZ	4730-00-193-2709	MS51846-24	96906	.NIPPLE,PIPE VALVE TO RSVR-AIR PP CKT 207K	EA	1

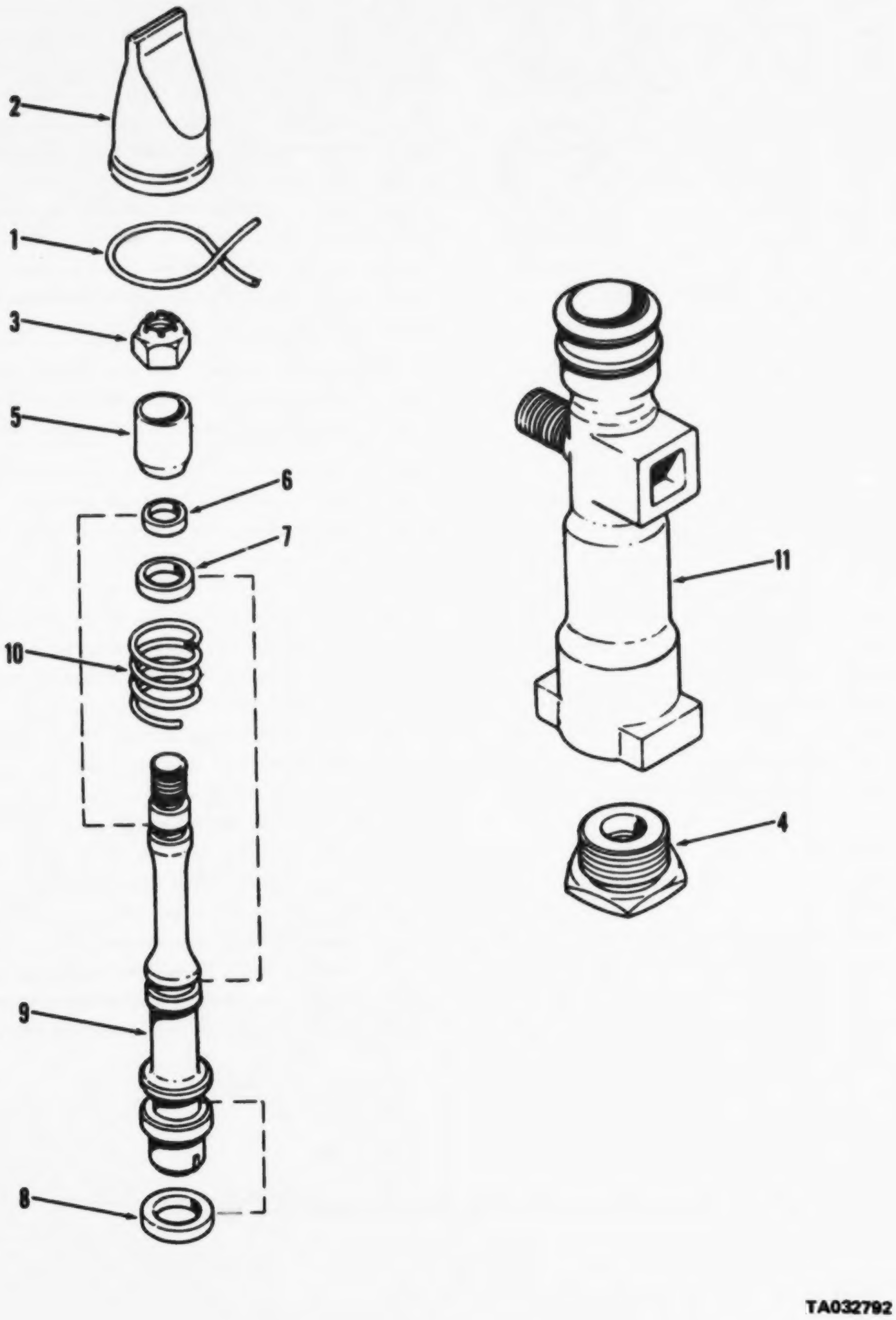

Figure 146. Valve assembly, drain

(1) ILLUSTRATION (a) FIG NO.	(b) ITEM NO.	(2) SMR CODE	(3) NATIONAL STOCK NUMBER	(4) PART NUMBER	(5) FSCM	(6) DESCRIPTION USABLE ON CODE	(7) U/M	(8) QTY INC IN UNIT
						FUNCTIONAL GROUP 51 AIR RESERVOIR AND DRAIN TUBE ASSEMBLIES,BRAKE SYSTEM		
146		PAOZZ	4820-00-411-8102	7024-01	06853	.VALVE AIR PRESSURE REMOTE CONTROL-AIR PP.CKT 207C..........	EA	2
146	1	PAOZZ		241856	06853	..CLAMP,HOSE DUST BOOT ATTACHING..........................	EA	1
146	2	PAOZZ	2530-00-792-1981	241855	06853	..BOOT DUST AND MOIST DRAIN VALVE.........................	EA	1
146	3	XDOZZ		230402	06853	..NUT SLFLKG VALVE MTG....................................	EA	1
146	4	XAOZZ		241851	06853	..VALVE PLUNGER DRAIN VALVE...............................	EA	1
146	5	XDOZZ	4730-00-850-3779	241853	06853	..NUT CAP DRAIN VALVE.....................................	EA	1
146	6	PAOZZ	5330-00-878-6485	240542	06853	..PACKING,PREFORMED DRAIN VALVE...........................	EA	1
146	7	XDOZZ	5330-00-113-8486	240543	06853	..PACKING,PREFORMED VALVE PLUNGER.........................	EA	1
146	8	XDOZZ	5330-00-454-0363	242393	06853	..PACKING,PREFORMED VALVE PLUNGER.........................	EA	1
146	9	XAOZZ		241852	06853	..PLUNGER VALVE RSVR DR...................................	EA	1
146	10	XDOZZ	5360-00-850-3762	241851	06853	..SPRING HLCPS VALVE PLUNGER..............................	EA	1
146	11	XAOZZ		241850	06853	..BODY VALVE DRAIN VALVE..................................	EA	1

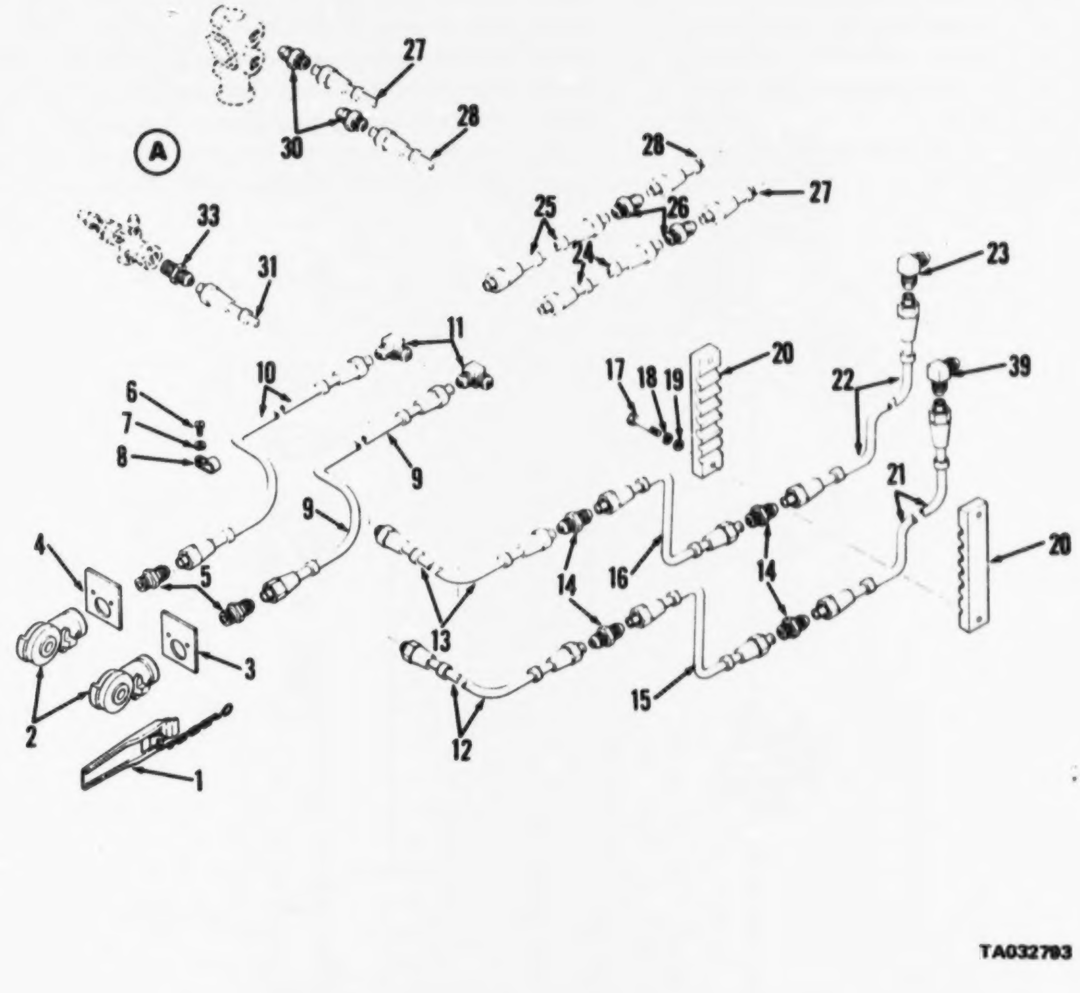

Figure 147. Tube assemblies, air brake (Sheet 1 of 2)

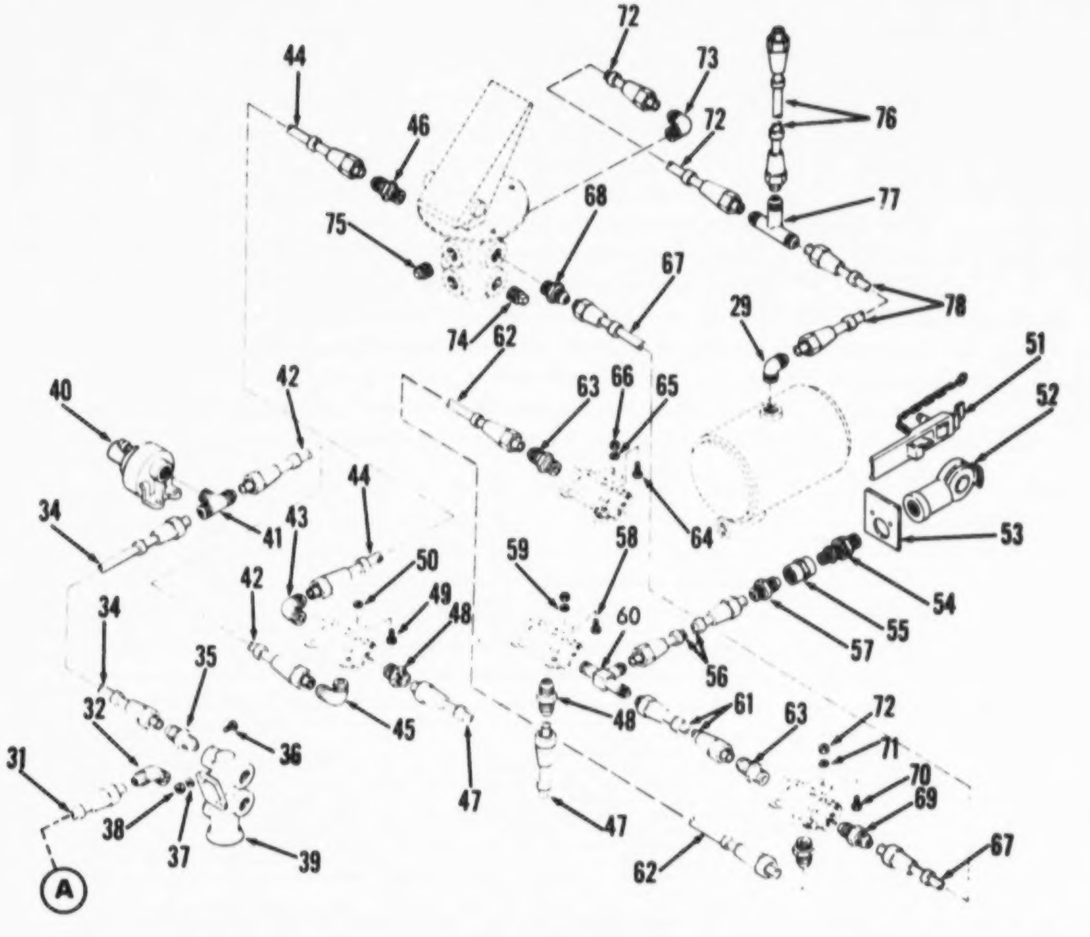

Figure 147. Tube assemblies, air brake (Sheet 2 of 2)

(1) ILLUSTRATION (a) FIG NO.	(b) ITEM NO.	(2) SMR CODE	(3) NATIONAL STOCK NUMBER	(4) PART NUMBER	(5) FSCM	(6) DESCRIPTION USABLE ON CODE	(7) U/M	(8) QTY INC IN UNIT
						FUNCTIONAL GROUP 52 TUBE ASSEMBLIES AND VALVES,AIR BRAKE SYSTEM		
147	1	PAOZZ	2530-00-270-3878	220636	06853	.DUMMY COUPLING,AUTO AIR BRAKE	EA	2
147	2	PAOZZ	4730-00-595-0083	MS35746-1	96906	.COUPLING HALF,QUICK AIR BRAKES	EA	2
147	3	XBOZZ	9905-00-999-7370	MS53007-1	96906	.PLATE IDENT SERVICE	EA	1
147	4	XBOZZ	9905-00-999-7369	MS53007-2	96906	.PLATE IDENT EMERGENCY	EA	1
147	5	PAOZZ	4730-00-439-1720	48X6X8	79470	.CONNECTOR MALE 3/8 AIR LINES TO COUPLINGSS	EA	2
147	6	PAOZZ	5305-00-984-6209	MS35206-262	96906	.SCREW MACH PAN HD 10-24X7-16 CLAMP MTG	EA	4
147	7	PAOZZ	5310-00-045-3296	MS35338-43	96906	.WASHER,LOCK NO 10	EA	4
147	8	PAOZZ	5340-00-764-7051	MS21333-69	96906	.CLAMP,LOOP 3-8	EA	4
147		MFOZZ		820N33	27315	.TUBE ASSY COP AIR LINES-CIRCUIT 206N	EA	1
147	10	MFOZZ		820N32	27315	.TUBE ASSY COP AIR LINES CIRCUIT 203V	EA	1
147	11	XBOZZ		55X6	79470	.ELBOW MALE 90DEG AIR LINES-CIRCUITS 203	EA	2
147	12	MFOZZ		820N3402	27315	.TUBE ASSY COP AIR LINE TO COUPLING-	EA	1
147		PAOZZ	4730-00-011-8539	MS39167-5	96906	..NUT,TUBE COUPLING 3-8 TUBE ASSY-CIRCUIT.06L	EA	2
147	13	MFOZZ		820N27	27315	.TUBE ASSY COP AIR LINE-CIRCUIT 203T	EA	1
147	14	PAOZZ	4730-00-265-6911	42X6	79470	.NIPPLE TUBE 3-8 AIR LINES-CIRCUITS206 AND 203	EA	4
147	15	MFOZZ		820N6403	27315	.TUBE ASSY COP AIR LINES-CIRCUIT 206K	EA	1
147	15	PAOZZ	4730-00-011-8539	MS39167-5	96906	..NUT,TUBE COUPLING TUBE ASSY-AIR LINES	EA	2
147	16	MFOZZ		820N6402	27315	.TUBE ASSY COP AIR LINE-CIRCUIT 203R	EA	1
147	16	PAOZZ		WW775	81349	..TUBE ASSEMBLY TUBE ASSY AIR LINE-CIRCUIT203R-MFR FROM 3-8ODXO.32WALLX 52 IN LG	EA	1
147	17	PAOZZ	5305-00-071-2239	MS90725-12	96906	.SCREW,CAP,HEXAGON 1-4-20X1-1-2 TUBE BLOCK MTG	EA	8
147	18	PAOZZ	5310-00-582-5965	MS35338-44	96906	.WASHER,LOCK 1-4 TUBE BLOCK MTG	EA	8
147	19	PAOZZ	5310-00-823-8804	MS27183-9	96906	.WASHER,FLAT 1/4 TUBE BLOCK MTG	EA	8
147	20	XDOZZ		816P676	27315	.BLOCK TUBE SPRT AIR PIPING LINES	EA	4
147	21	MFOZZ		820N6303	27315	.TUBE ASSY COP AIR LINES- CIRCUIT 206J	EA	1
147	22	MFOZZ		820N6302	27315	.TUBE ASSY COP AIR LINES CIRCUIT 203P	EA	1
147	22	PAOZZ	4730-00-011-8539	MS39167-5	96906	..NUT,TUBE COUPLING TUBE ASSY-AIR CIRCUIT.03P	EA	2
147	22	PAOZZ	4710-00-277-5527	WWT775	81349	..TUBE COPPER AIR LINES-CIRCUIT 203P: 3/8.D X .032 WALL THK, 80 IN LG	FT	V
147	23	XDOZZ		F107-3-8	90480	.ELBOW TUBE 90DEG	EA	2
147	24	MFOZZ		820P45701	27315	.TUBE ASSY,COP TUBE ASSY-AIR PIPING	EA	1
147	25	MFOZZ		820P45702	27315	.TUBE ASSY COP AIR PIPING CIRCUIT 203W	EA	1
147	26	PAOZZ	4730-00-265-6911	42X6	79470	.NIPPLE TUBE AIR PIPING CIRCUITS 203J AND.206E	EA	2
147	27	MFOZZ		820P44701	27315	.TUBE ASSY COP AIR PIPING-CIRCUIT 203J	EA	1
147	28	MFOZZ		820P456	27315	.TUBE ASSY COP AIR PIPING CIRCUIT 206E	EA	1
147	29	PAOZZ	4730-00-841-0561	2003-8-8B	01276	.ELBOW,TUBE: 1-2-14 X 3-4-16,PIPING	EA	1
147	30	PAOZZ	4730-00-439-1720	48X6X8	79470	.CONNECTOR MALE 3-8TUBE-1-4-14X5-8-18	EA	2
147	31	MFOZZ		820N47	27315	.TUBE ASSY COP AIR PIPING CIRCUIT 206D	EA	1
147	31	PAOZZ	4730-00-011-8539	MS39167-5	96906	..NUT,TUBE COUPLING TUBE ASSY AIR PP CKT	EA	2
147	32	PAOZZ	4730-00-502-8991	MS39162-5	96906	.ELBOW,PIPE TO TUBE 90DEG AIR PIPING	EA	1

(1) ILLUSTRATION (a) FIG NO.	(1) ILLUSTRATION (b) ITEM NO.	(2) SMR CODE	(3) NATIONAL STOCK NUMBER	(4) PART NUMBER	(5) FSCM	(6) DESCRIPTION USABLE ON CODE	(7) U/M	(8) QTY INC IN UNIT
147	3	PAOZZ	4730-00-266-0538	MS35869-2-3	96906	.ADAPTER,STRAIGHT 3-8X1-4 AIR PIPING..................	EA	1
147	34	MFOZZ		820P419	27315	.TUBE ASSY COP AIR PIPING CIRCUIT 203L..................	EA	1
147	34	PAOZZ	4730-00-011-8539	MS29167-5	96906	..NUT,TUBE COUPLING 3-8 TUBE ASSY-AIR..................	EA	2
147	35	PAOZZ	4730-00-439-1722	48X6X6	79470	.ADAPTER STRAIGHT 3-8 TUBE-AIR PIPING..................	EA	1
147	36	PAOZZ	5306-00-225-8514	MS90725-50	96906	.BOLT,MACHINE 5-16-18X4-1-2 PTCT VALVE MTG..................	EA	2
147	37	PAOZZ	5310-00-407-9566	MS35338-45	96906	.WASHER,LOCK 5-16 PTCT VALVE MTG..................	EA	2
147	38	PAOZZ	5310-00-761-6882	MS51967-2	96906	.NUT,PLAIN,HEXAGON 5-16-18 PTCT VALVE MTG..................	EA	2
147	39	PAOZZ	2530-00-254-5949	7011-04	06853	.VALVE: PRESSURE CONTROL,AIR PIPING SYSTEM..................	EA	1
147	40	PAOZZ	5930-00-888-9865	MS75062-1	96906	.SWITCH,PRESSURE STPLGHT- AIR PP CIRCUIT..................	EA	1
147	41	XBOZZ		F113-1-4X1-8	50480	.TEE AIR PP CIRCUIT 203K-TUBE TO PRESS..................	EA	2
147	42	MFOZZ		820P420	27315	.TUBE ASSY COP AIR PP CIRCUIT 203K..................	EA	1
147	43	XBOZZ		49X6X6	79470	.ELBOW: MALE,TUBE TO CHECK VALVE,3-8,CIRCUIT 203D	EA	1
147	72	PAOZZ	4730-00-254-6228	735C856	19207	.ELBOW,PIPE TO TUBE TUBE TO CK VALVE-AIR..................	EA	1
147	44	MFOZZ		820P438	27315	.TUBE ASSY,COPPER,AIR PIPING CIRCUIT 203D..................		
147	45	PAOZZ	4730-00-254-6228	735C896	19207	.ELBOW,PIPE TO TUBE 3-8 TUBE TO CK VALVE..................	EA	1
147	46	PAOZZ	4730-00-435-1720	48X6X8	79470	.CONNECTOR TUBE 3-8 MALE-TUBE TO TREADLE..ALVE-AIR PP CKT 203D..................	EA	1
147	47	MFOZZ		820P432	27315	.TUBE ASSY COP VALVE TO VALVE AIR PP CKT..................	EA	1
147	48	PAOZZ	4730-00-439-1722	48X6X6	79470	.ADAPTER STRAIGHT 3-8 TUBE-AIR PIPING CKT..................	EA	2
147	49	PAOZZ	5306-00-225-8479	MS90725-32	96906	.BOLT,MACHINE,5-16 X 3-4,VALVE MTG..................	EA	2
147	51	PAOZZ	2530-00-427-3357	7007-65	06853	.DUMMY COUPLING,AUTO AIR PIPING CIRCUIT..................	EA	1
147	50	PAOZZ	5310-00-407-9566	MS35338-45	96906	.WASHER,LOCK,5-16,VALVE MTG..................	EA	2
147	52	PAOZZ	4730-00-555-0093	MS35746-1	96906	.COUPLING HALF,QUICK AIR PIPING CIRCUIT..................	EA	1
147	53	XBOZZ	9905-00-999-7370	MS53007-1	96906	.PLATE IDENT SERVICE-AIR COUPLING..................	EA	1
147	54	PAOZZ	5307-01-044-7288	205730-9	06853	.STUD,CLAMPING COUPLING MTG..................	EA	1
147	55	PAOZZ	4730-01-029-7765	440238D15	27315	.CONNECTOR,PIPE AIR PP CKT 209-COUPLING..................	EA	1
147	56	MFOZZ		820P437	27315	.TUBE ASSY COP AIR PIPING CKT 209A..................	EA	1
147	57	PAOZZ	4730-00-439-1722	48X6X6	79470	.ADAPTER STRAIGHT 3-8 TEE TO VALVE-AIR PP.CKT 203..................	EA	1
147	58	PAOZZ	5306-00-225-8457	MS90725-32	96906	.BOLT MACHINE 5-16-18X3-4 VALVE MTG..................	EA	2
147	59	PAOZZ	5310-00-407-9566	MS35338-45	96906	.WASHER,LOCK 5-16 VALVE MTG..................	EA	2
147	60	PAOZZ	4730-01-024-2848	44Q208D2	27315	.TEE MALE 90DEG TUBE ASSYS TO VALVE..................	EA	1
147	61	MFOZZ		1-820P426	27315	.TUBE ASSY: COP,AIR PP,CKT 203B..................	EA	1
147		XBOZZ	9905-00-935-3863	MS39020-28	96906	..MARKER BAND TUBE ASSY-AIR PP CKT 203F..................	EA	2
147	62	MFOZZ		1-820P427	27315	.TUBE ASSY: COP,AIR PP,CKT 203B..................	EA	1
147	63	PAOZZ	4730-00-439-1722	48X6X6	79470	.ADAPTER STRAIGHT TUBE ASSY TO VALVES..................	EA	3
147	67	MFOZZ		1-820P439	27315	.TUBE ASSY: COP,AIR PP,CKT 203C..................	EA	1
147	68	PAOZZ	4730-00-435-1720	48X6X8	79470	.CONNECTOR TUBE 3-8 MALE TUBE TO TREADLE..ALVE AIR PIPING CKT 203C..................	EA	1
147	69	PAOZZ	4730-00-435-1722	48X6X6	79470	.ADAPTER STRAIGHT TUBE TO CHK VALVE-AIR PP CKT 203C..................	EA	1
147	72	MFOZZ		820P440	27315	..TUBE ASSY COP TREADLE TO TRAILER VALVE..................	EA	1
147		PAOZZ	4730-00-921-3243	MS35167-7	96906	..NUT,TUBE COUPLING TUBE ASSY-AIR PP CKT..................	EA	2
147	73	PAOZZ	4730-00-254-6229	49F1-2X1-2	30327	.ELBOW,PIPE TO TUBE 1-2-14X3-4-16 AIR PP..................	EA	1
147	774	XDOZZ	4730-00-555-8292	44Z1C4CD4	27315	.PLUG PIPE 1-2-14 TREADLE VALVE..................	EA	3
147	75	PAOZZ	4730-00-554-7540	230576	06853	.PLUG,PIPE 1-4-18 NPTF-TREADLE VALVE..................	EA	2
147	76	MFOZZ		820P502	27315	.TUBE ASSY COP AIR PP CKT 201H..................	EA	1
147	78	PAOZZ	4730-00-401-7132	13205E3855-1	97403	.TEE,TUBE AIR PP CKT 201H..................	EA	1
147	78	MFOZZ		1-820P416	27315	.TUBE ASSY: COP,AIR PP,CKT 201H..................	EA	1

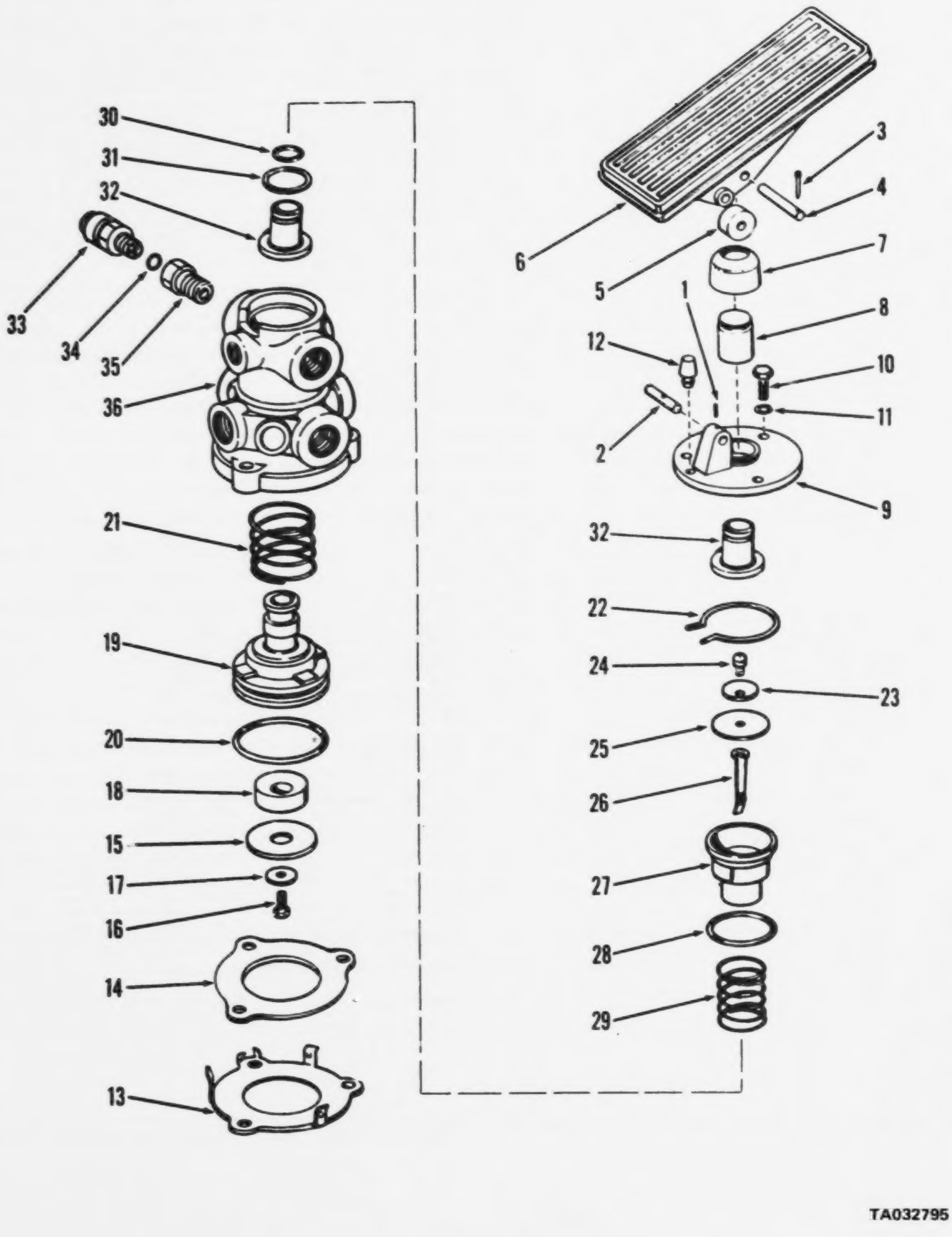

Figure 148. Valve assembly, treadle

(1) ILLUSTRATION		(2)	(3)	(4)	(5)	(6)	(7)	(8)
(a) FIG NO.	(b) ITEM NO.	SMR CODE	NATIONAL STOCK NUMBER	PART NUMBER	FSCM	DESCRIPTION USABLE ON CODE	U/M	QTY INC IN UNIT
						FUNCTIONAL GROUP 52 TUBE ASSEMBLIES AND VALVES,AIR BRAKE SYSTEM		
148		PAOZZ	2530-00-844-2527	7022-02	06853	.VALVE TREADLE BRAKE	EA	1
148	1	XDOZZ		235212	06853	..PIN ROLL STRGHT PIN HLDNG	EA	1
148	2	XDOZZ	5315-00-978-2019	238888	06853	..PIN STRGHT HD TREADLE VALVE	EA	1
148		XDOZZ		7022-06	06853	..PEDAL ASSY CONT TREADLE VALVE	EA	1
148	3	PAOZZ	5365-00-650-0979	210492	06853	...RING,RETAINING STRGHT PIN RTNG	EA	1
148	4	XBOZZ		238474	06853	...PIN STRGT HDLS CONTROL PEDAL ALIGN	EA	1
148	5	XBOZZ	3120-00-625-2559	236288	06853	...ROLLER,LINEAR-ROTAR PEDAL FULCRUM	EA	1
148	6	XBOZZ		279928	06853	...PEDAL CONTROL BRAKE	EA	1
148		PAOZZ	2530-00-195-5795	7022-05	06853	..VALVE ASSY PEDAL CONTROLLED	EA	1
148	7	PCOZZ	2530-00-775-5723	236982	06853	...BOOT,DUST AND MOIST DUST AND MOISTURE	EA	1
148	8	XAOZZ		242094	06853	...PLUNGER DETENT VALVE DRIVING	EA	1
148	9	XDOZZ		245720	06853	...PLATE MOUNTING PEDAL	EA	1
148	10	PAOZZ	5305-00-626-0219	203821	06853	...SCREW,MACHINE PLATE MOUNTING	EA	3
148	11	PAOZZ	5310-00-959-4679	MS35340-45	96906	...WASHER,LOCK PLATE MOUNTING	EA	3
148	12	XAOZZ		236580	06853	...BUTTON STOP BRAKE PEDAL	EA	1
148		XAOZZ		282541	06853	...VALVE ASSEMBLY BRAKE TREADLE	EA	1
148	13	XAOZZ		239668	06853	....RETAINER PISTON TREADLE VALVE	EA	1
148	14	XAOZZ		245570	06853	....GASKET RTNR PLT VALVE BODY	EA	1
148		XAOZZ		277854	06853	....PISTON ASSY TREADLE VALVE	EA	1
148	15	XAOZZ		243019	06853	.....SEAT SPRING TREADLE VALVE	EA	1
148	16	PAOZZ	5306-00-119-4755	239640	06853	.....SCREW,SELF-LOCKING SEAT SPRING MTG	EA	1
148	17	XBOZZ	5310-00-121-8217	239713	06853	.....WASHER,FLAT SEAT SPRING MTG	EA	1
148	18	XAOZZ		241559	06853	.....SPRING RUBBER VALVE PISTON	EA	1
148	19	XAOZZ		243011	06853	.....PISTON VALVE SPRING DRIVING	EA	1
148	20	XAOZZ		239643	06853	....PACKING PREFMD PISTON SEAL	EA	1
148	21	XAOZZ		235829	06853	....SPRING HLCPS PISTON DRIVEN	EA	1
148	22	XAOZZ		239476	06853	....RING RTNG VALVE SEAT	EA	1
148		XAOZZ		229502	06853	....VALVE INT & EXH AIR BRAKE TREADLE	EA	1
148	23	XAOZZ		239708	06853	...WASHER CLNH RNG DIAPHRAGM SEAT	EA	1
148	24	PAOZZ	5305-00-119-4880	242105	06853	...SCREW DIAPHRAGM MOUNTING	EA	1
148	25	XAOZZ		239615	06853	...DIAPHRAGM BRAKE FLAT	EA	1
148	26	XDOZZ	5360-00-152-0332	239737	06853	...SPRING BAR PRELOAD	EA	1
148	27	XAOZZ		244586	06853	...SEAT VALVE BRAKE	EA	1
148	28	XAOZZ		239645	06853	...PACKING,PREFORMED VALVE SEAT	EA	1
148	29	XDOZZ	5360-00-152-0334	235627	06853	...SPRING HLCPS VALVE BODY	EA	1
148	30	XAOZZ		240960	06853	...RETAINER VALVE BRAKE TREADLE	EA	1
148	31	XAOZZ		239136	06853	...PACKING,PREFORMED VALVE SEAL	EA	1
148	32	XAOZZ		239575	06853	...VALVE EXHAUST BRAKE TREADLE	EA	1

(1) ILLUSTRATION (a) FIG NO.	(b) ITEM NO.	(2) SMR CODE	(3) NATIONAL STOCK NUMBER	(4) PART NUMBER	(5) FSCM	(6) DESCRIPTION USABLE ON CODE	(7) U/M	(8) QTY INC IN UNIT
148	33	XAOZZ		222797	06853	....VALVE BREATHER BRAKE TREADLE..............................	EA	1
148	34	XAOZZ		233955	06853	....PACKING PREMD BREATHER....................................	EA	1
148	35	XAOZZ		246573	06853	....PLUG VENT VALVE...	EA	1
148	36	XAOZZ		239633	06853	....BODY VALVE BRAKE TREADLE..................................	EA	1

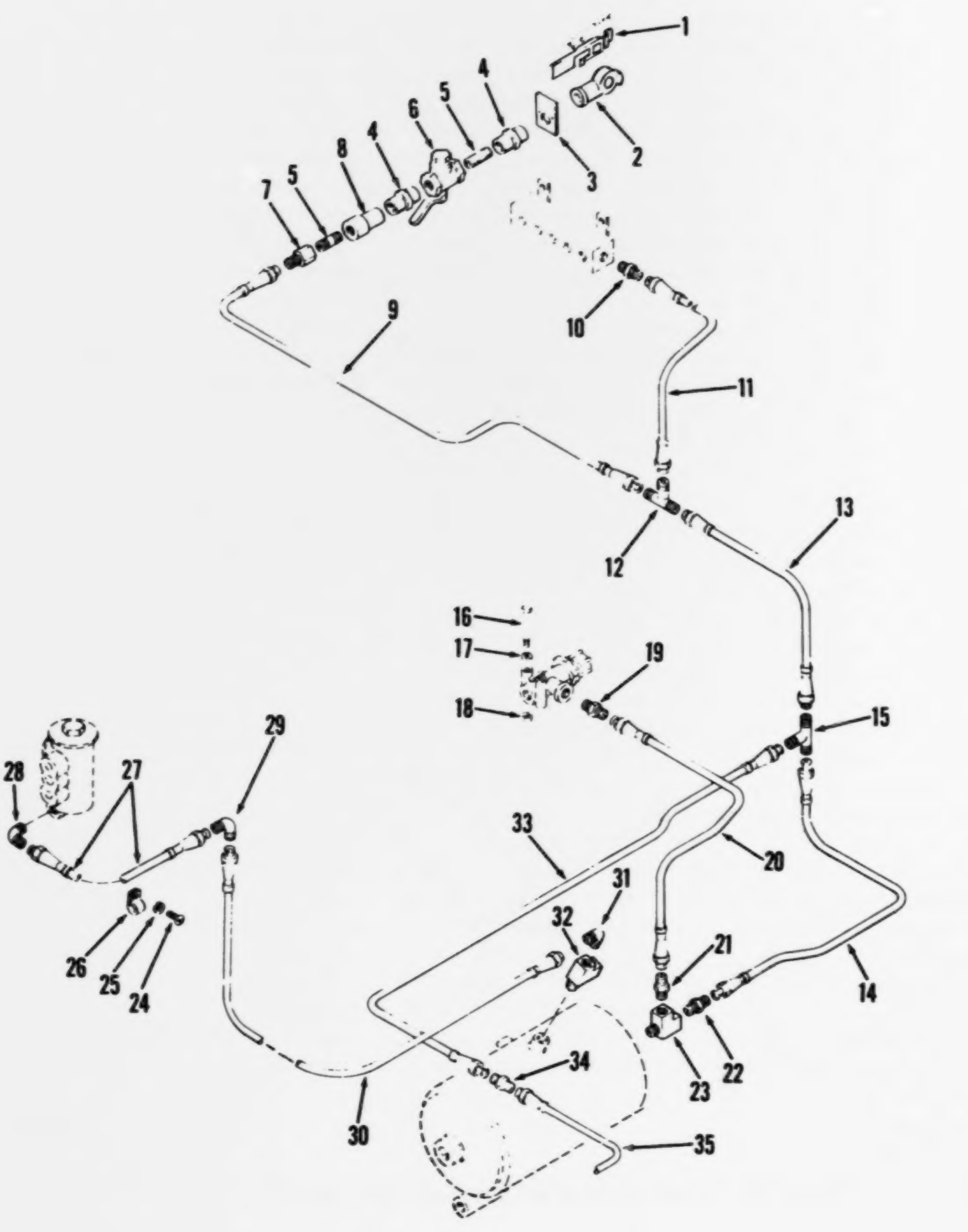

Figure 149. Couplings, hose and tube assemblies (Sheet 1 of 2)

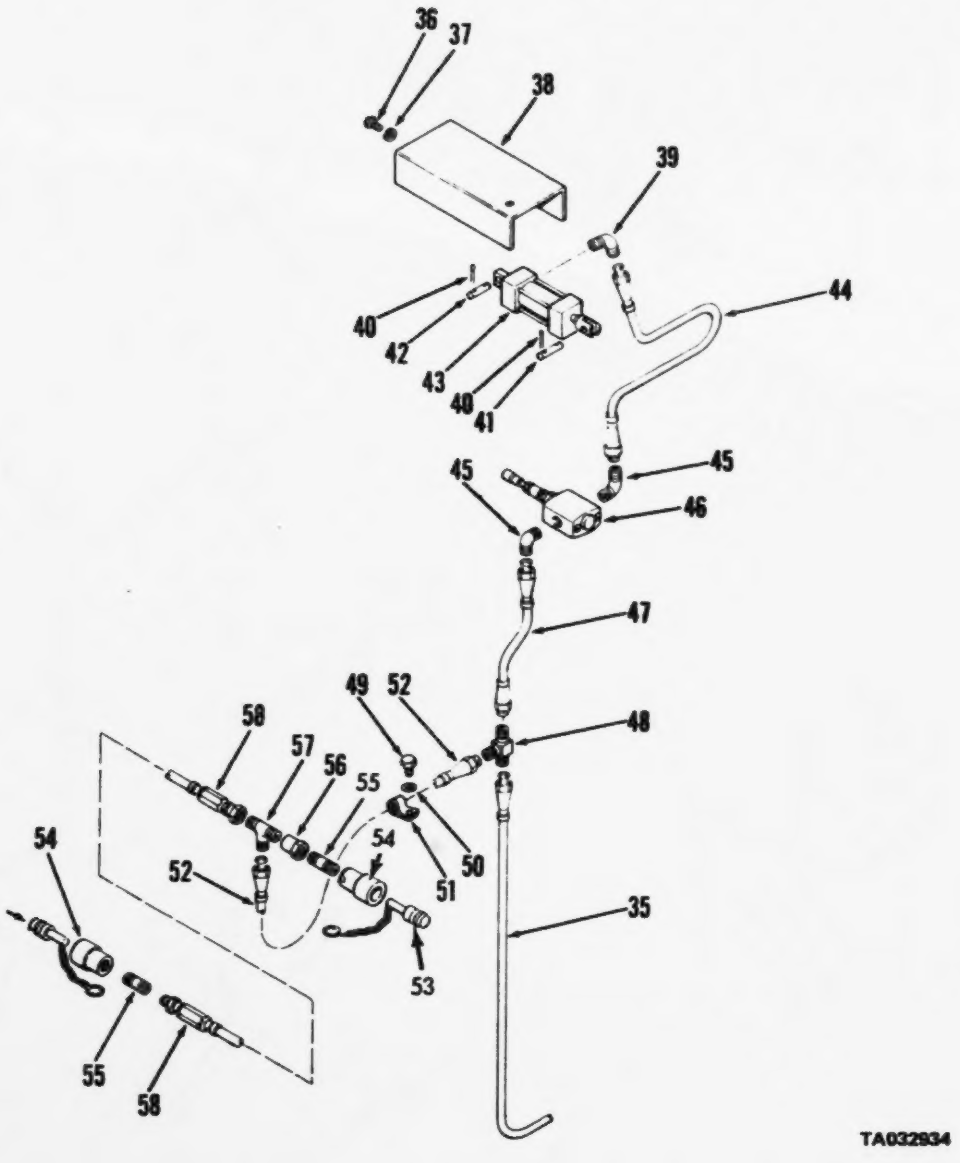

Figure 149. Couplings, hose and tube assemblies (Sheet 2 of 2)

(1) ILLUSTRATION (a) FIG NO.	(b) ITEM NO.	(2) SMR CODE	(3) NATIONAL STOCK NUMBER	(4) PART NUMBER	(5) FSCM	(6) DESCRIPTION USABLE ON CODE	(7) U/M	(8) QTY INC IN UNIT
						FUNCTIONAL GROUP 52 TUBE ASSEMBLIES AND VALVES,AIR BRAKE SYSTEM		
149	1	XBOZZ	2530-00-270-3878	220636	06853	.DUMMY COUPLING AIR PIPING SYSTEM	EA	1
149	2	XBOZZ	4730-00-595-0083	MS35746-1	96906	.COUPLING HALF,QUICK AIR PIPING SYSTEM	EA	1
149	3	XBOZZ	9905-00-995-7369	MS53007-2	96906	.PLATE EMERGENCY	EA	1
149	4	XBOZZ	5307-01-044-7288	20573C-9	06853	.BUSHING TUBE COUPLING AIR LINE	EA	2
149	5	XDOZZ	4730-01-029-7765	44Q238D15	27315	.CONNECTOR TUBE AIR PP CKT 20B	EA	2
149	6	XBOZZ	4820-00-411-5454	13205E3917	97403	.VALVE,PLUG AIR BRAKES	EA	1
149	7	PAOZZ	4730-00-222-1839	MS51846-58	96906	.NIPPLE PIPE 1-2 TUBE	EA	1
149	8	XDOZZ	4730-00-458-9705	13205E3843-3	97403	.ADAPTER,STRAIGHT 1-2-14X3-4-16	EA	1
149	9	MFOZZ		820N42	27315	.TUBE ASSEMBLY AIR BRAKE CKT 201	EA	1
149		PAOZZ	9905-00-935-3863	MS39020-28	96906	..MARKER,BAND AIR BRAKE LINE TUBE ASSY	EA	2
149	10	PAOZZ	4730-00-439-1720	48X6X8	79470	.ADAPTER,STRAIGHT BRAKE LINE TO AIR	EA	1
149	11	MFOZZ		820N77	27315	.TUBE ASSEMBLY AIR BRAKE LINE TO AIR	EA	1
149		PAOZZ	9905-00-935-3863	MS39020-28	96906	..MARKER,BAND AIR BRAKE TUBE ASSY 201X	EA	2
149	12	XBOZZ	4730-00-401-7132	144X8X8X6	72216	.TEE,TUBE 5-8-18X3-4-16	EA	1
149	13	MFOZZ		820P417	27315	.TUBE ASSEMBLY AIR PP CKT 201E	EA	1
149		PAOZZ	9905-00-935-3863	MS39020-28	96906	..MARKER,BAND AIR PP CKT 201E TUBE ASSY	EA	2
149	14	MFOZZ		820P430	27315	.TUBE ASSY COP AIR PP CKT 201D	EA	1
149		PAOZZ	9905-00-935-3863	MS39020-28	96906	..MARKER,BAND AIR PP CKT 201D TUBE ASSY	EA	2
149	15	PAOZZ	4730-00-401-7132	144X8X8X6	72216	.TEE,TUBE AIR PP CKT 201D	EA	1
149	16	PAOZZ	5305-00-071-2514	MS90728-17	96906	.SCREW,CAP,HEXAGON 1-4-20X2-3-4 VALVE MTG	EA	2
149	17	PAOZZ	5310-00-582-5965	MS35338-44	96906	.WASHER,LOCK 1-4 VALVE MTG	EA	2
149	18	PAOZZ	5310-00-761-6882	MS51967-2	96906	.NUT,PLAIN,HEXAGON 1-4-20	EA	2
149	19	XBOZZ	4730-00-266-0538	MS35869-2-3	96906	.ADAPTER,STRAIGHT 5-16X1-4	EA	1
149	20	MFOZZ		820P491	27315	.TUBE ASSY COPPER VALVE TO AIR RESERVOIR	EA	1
149		PAOZZ	9905-00-935-3863	MS39020-28	96906	..MARKER,BAND VALVE TO AIR RESERVOIR TUBE	EA	2
149	21	XBOZZ	4730-00-435-1720	48X6X8	79470	.CONNECTOR MALE 3-8 TUBE-AIR PIPING TUBE	EA	1
149	22	XBOZZ	4730-00-278-4603	48X8X8	79470	.ADAPTER,STRAIGHT 1-2 TUBE	EA	1
149	23	XBOZZ	4730-01-028-3441	20Q43D15	27315	.TEE,PIPE 1-2-14 AIR RESERVOIR	EA	1
149	24	XDOZZ	5305-00-984-6209	MS35206-262	96906	.SCREW MACHINE NO 10-24X7-16 TUBE CLMP MTG	EA	1
149	25	PAOZZ	5310-00-045-3296	MS35338-43	96906	.WASHER,LOCK NO 10 TUBE CLMP MTG	EA	1
149	26	PAOZZ	5340-00-764-7051	MS21333-69	96906	.CLAMP,LOOP 3-8 NOM DIA-TUBE MTG	EA	1
149	27	MFOZZ		820N34D7	27315	.TUBE ASSY COPPER GOV TO AIR RESERVOIR-AIR PP CKT 201HH	EA	1
149		PAOZZ	9905-00-935-3863	MS39020-28	96906	..MARKER,BAND GOV TO RESV TUBE ASSY	EA	2
149	28	PAOZZ		44Q21902	27315	.ELBOW PIPE 1-4 TUBE	EA	1
149		XDOZZ		F107-3-8	50480	.ELBOW TUBE 90 DEG GOV TO RESV AIR LINE	EA	1
149	30	MFOZZ		820P487	27315	.TUBE ASSY COPPER 3-8 TUBE	EA	1
149		PAOZZ	9905-00-935-3863	MS39020-28	96906	..MARKER,BAND GOV TO RSVR TUBE ASSY	EA	2
149	31	XBOZZ	4730-00-720-0119	45X6X8	79470	.ELBOW,PIPE TO TUBE GOV TO RSVR AIR LINE	EA	1

(1) ILLUSTRATION (a) FIG NO.	(b) ITEM NO.	(2) SMR CODE	(3) NATIONAL STOCK NUMBER	(4) PART NUMBER	(5) FSCM	(6) DESCRIPTION USABLE ON CODE	(7) U/M	(8) QTY INC IN UNIT
149	32	PAOZZ	4730-01-028-3441	20Q43D15	27315	.TEE,PIPE AIR RSVR	EA	1
149	33	MFOZZ		820P425	27315	.TUBE ASSY COPPER AIR PP CKT 201L	EA	1
149		PAOZZ	9905-00-935-3863	MS39020-28	96906	..MARKER,BAND AIR PP CKT 201L TUBE ASSY	EA	2
149	34	XBOZZ	4730-00-265-6911	42X6	79470	.NIPPLE TUBE 3-8 AIR PP CKT 201L	EA	1
149	35	MFOZZ		820N34D3	27315	.TUBE ASSY COP AIR PP CKT 201J	EA	1
149		PAOZZ	9905-00-935-3863	MS39020-28	96906	..MARKER,BAND AIR PP CKT 201J TUBE ASSY	EA	2
149	36	PAOZZ	5305-00-068-0499	MS90725-2	96906	.SCREW,CAP,HEXAGON 1-4-20X7-16 COVER MTG	EA	1
149	37	PAOZZ	5310-00-582-5965	MS35338-44	96906	.WASHER,LOCK 1-4 COVER MTG	EA	1
149	38	XDOZZ		814P19	27315	.COVER VALVE VALVE PROTECTION	EA	1
149	39	XBOZZ	4730-00-254-6227	49X6X2	79470	.ELBOW PIPE TO TUBE 1-8-27X5-8-18	EA	1
149	40	PAOZZ	5315-00-839-2326	MS24665-281	96906	.PIN,COTTER 1-2	EA	4
149	41	PAOZZ		819T185D2	27315	.PIN STRAIGHT CYLINDER MTG	EA	1
149	42	PAOZZ	5315-00-400-7610	13205E3780-1	97403	.PIN,DOWEL VALVE MTG	EA	1
149	44	MFOZZ		820P466	27315	.TUBE ASSY COPPER CYL TO VALVE TUBE ASSY	EA	1
149		PAOZZ	9905-00-935-3863	MS39020-28	96906	..MARKER,BAND CYL TO VALVE TUBE ASSY	EA	2
149	45	XBOZZ	4730-00-254-6227	49X6X2	79470	.ELBOW PIPE TO TUBE AIR LINES TO	EA	2
149	47	MFOZZ		820N56	27315	.TUBE ASSEMBLY AIR PP CKT 003,3/8 ODX	EA	1
149		PAOZZ	9905-00-935-3863	MS39020-28	96906	..MARKER,BAND AIR PP CKT 003 TUBE ASSY	EA	2
149	48	XDOZZ		44X6	79470	.TEE TUBE 3-8 TUBE	EA	1
149	49	PAOZZ	5305-00-984-6209	MS35206-262	96906	.SCREW MACHINE NO.10-24X7-16 TUBE CLMP	EA	2
149	49	PAOZZ	5310-00-045-3296	MS35338-43	96906	.WASHER,LOCK NO 10 TUBE CLMP MTG	EA	2
149	51	PAOZZ	5340-00-764-7051	MS21333-69	96906	.CLAMP,LOOP 3-8 TUBE	EA	2
149	52	MFOZZ		820P507	27315	.TUBE ASSY COPPER AIR PP CKT 201M	EA	1
149		PAOZZ	9905-00-935-3863	MS39020-28	96906	..MARKER,BAND AIR PP CKT 201M TUBE ASSY	EA	2
149	53	XDOZZ		5659-10	99879	.COVER DUST COUPLING PROTECTION	EA	2
149	54	PAOZZ		13205E3847-1	97403	.COUPLING BODY AIR CKT 201JJ	EA	2
149	55	XBOZZ	4730-00-959-1629	[illegible]218E0110-15	97403	.NIPPLE,PIPE 1-2-14	EA	2
149	56	XDOZZ	4730-00-828-0169	[illegible]81-2-1-4	30327	.REDUCER,PIPE 1-2-14X1-4-18 COUPLING TUBE	EA	1
149	57	XBOZZ	4730-01-008-7827	[illegible] 204	27315	.TEE,PIPE TO TUBE AIR LINE 201JJ	EA	1
149	58	MFOOZ		4[illegible]02	27315	.HOSE ASSEMBLY AIR CKT 201JJ	EA	1

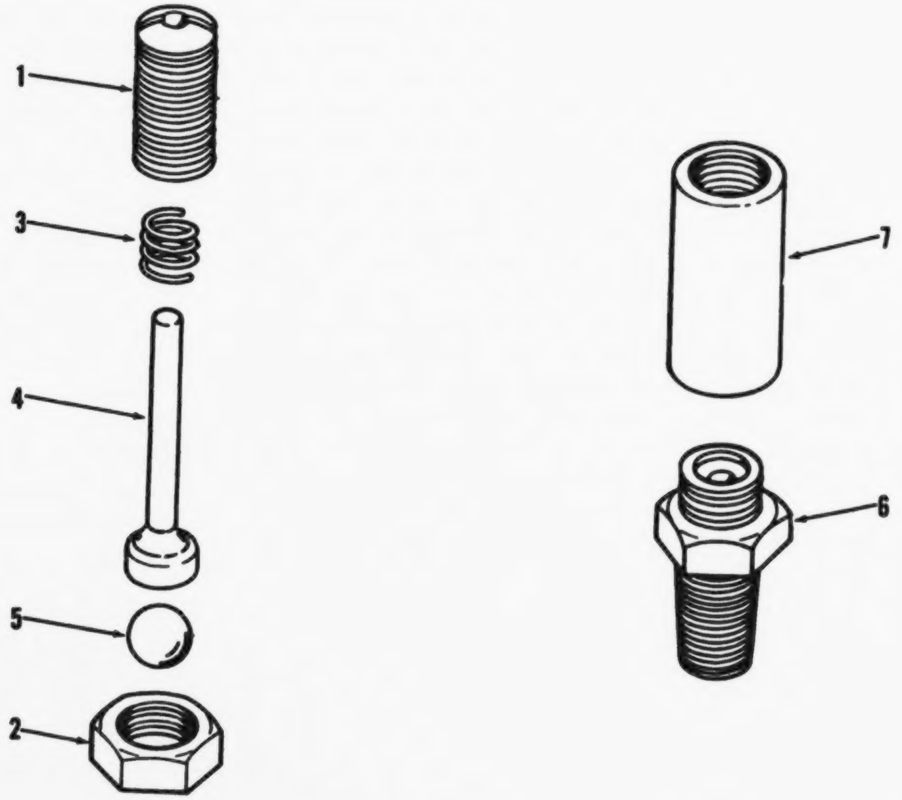

Figure 150. Valve assembly, safety

(1) ILLUSTRATION (a) FIG NO	(b) ITEM NO.	(2) SMR CODE	(3) NATIONAL STOCK NUMBER	(4) PART NUMBER	(5) FSCM	(6) DESCRIPTION USABLE ON CODE	(7) U/M	(8) QTY INC IN UNIT
						FUNCTIONAL GROUP 52 TUBE ASSEMBLIES AND VALVES,AIR BRAKE SYSTEM		
150		PAOZZ	4820-00-595-2761	205105	06853	.VALVE,SAFETY RELIEF GOV TO AIR RSVR AIR..............	EA	1
150	1	XAOZZ		201611	06853	..NUT ADJUSTING SAFETY VALVE..............................	EA	1
150	2	XAOZZ		201612	06853	..NUT LOCK ADJUSTING SAFETY VALVE.........................	EA	1
150	3	XAOZZ		201614	06853	..SPRING HELICAL BALL LOADING.............................	EA	1
150	4	XAOZZ		240517	06853	..PIN RELEASE SAFETY VALVE................................	EA	1
150	5	XAOZZ		213203	06853	..BALL CHECK SAFETY VALVE.................................	EA	1
150	6	XAOZZ		201610	06853	..RETAINER SPRING SAFETY VALVE............................	EA	1
150	7	XAOZZ		201609	06853	..BODY VALVE SAFETY.......................................	EA	1

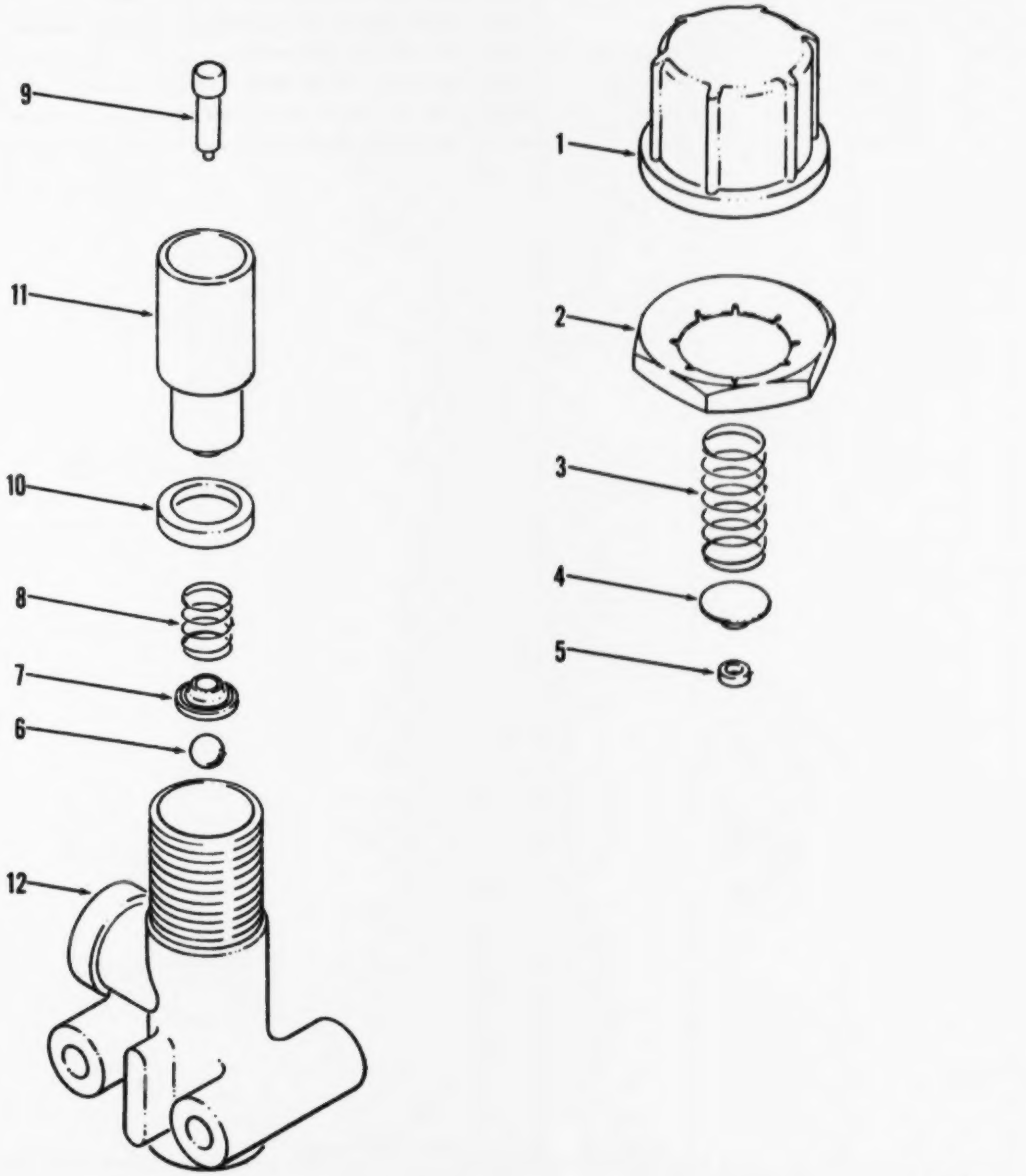

Figure 151. Valve assembly, pressure

(1) ILLUSTRATION (a) FIG NO.	(1) ILLUSTRATION (b) ITEM NO.	(2) SMR CODE	(3) NATIONAL STOCK NUMBER	(4) PART NUMBER	(5) FSCM	(6) DESCRIPTION USABLE ON CODE	(7) U/M	(8) QTY INC IN UNIT
						FUNCTIONAL GROUP 52 TUBE ASSEMBLIES AND VALVES,AIR BRAKE SYSTEM		
151		PAOZZ	4820-00-435-7577	277227	06853	.VALVE PRESSURE AIR BRAKE LINE..............................	EA	1
151	1	XAOZZ		241887	06853	..COVER ADJUSTING PRESS PROTECTION VALVE....................	EA	1
151	2	XAOZZ		241952	06853	..NUT SPECIAL PRESS PROTECTION VALVE........................	EA	1
151	3	XAOZZ		241516	06853	..SPRING HELICAL PRESS PROTECTION VALVE.....................	EA	1
151	4	XAOZZ		241914	06853	..SEAT SPRING VALVE...	EA	1
151	5	XAOZZ		236640	06853	..PLUNGER VALVE PRESSURE PROTECTION VALVE...................	EA	1
151	6	XAOZZ		239773	06853	..BALL VALVE PRESS PROTECTION VALVE.........................	EA	1
151	7	XAOZZ		214913	06853	..SEAT SPRING PRESSURE PROTECTION VALVE.....................	EA	1
151	8	XAOZZ		241512	06853	..SPRING HELICAL PRESSURE PROTECTION VALVE..................	EA	1
151	9	XAOZZ		241911	06853	..PLUNGER VALVE PRESSURE PROTECTION VALVE...................	EA	1
151	10	PAOZZ	5330-00-453-6300	242391	06853	..PACKING PREFORMED PRESSURE PROTECTION.....................	EA	1
151	11	XAOZZ		241510	06853	..HOUSING SPRING PRESSURE PROTECTION VALVE..................	EA	1
151	12	XAOZZ		241910	06853	..BODY VALVE PRESSURE PROTECTION VALVE......................	EA	1

AMC FORM 1775, 1 OCT 73 (REPLACES AMC TEST FORMS 1753 AND 1754, 6 APR 70, WHICH WILL BE USED UNTIL 1 JUL 74)

REPAIR PARTS LIST

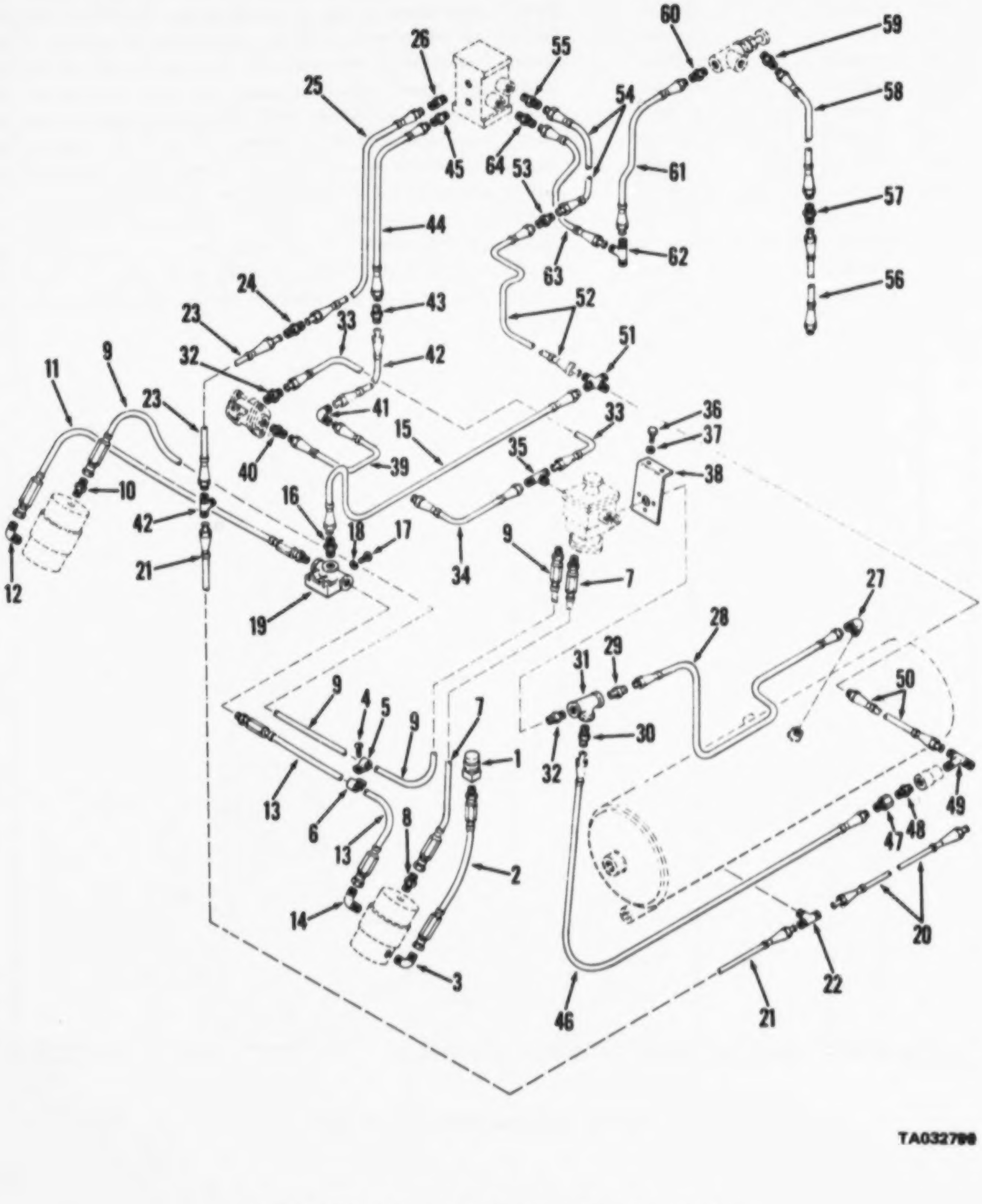

Figure 152. Hose and tube assemblies, front brake

(1) ILLUSTRATION		(2)	(3)	(4)	(5)	(6) DESCRIPTION	(7)	(8)
(a) FIG NO.	(b) ITEM NO.	SMR CODE	NATIONAL STOCK NUMBER	PART NUMBER	FSCM	USABLE ON CODE	U/M	QTY INC IN UNIT
						FUNCTIONAL GROUP 53 AIR CHAMBERS,VALVES, HOSE AND TUBE ASSEMBLIES,FRONT AND REAR WHEELS		
152	1	XDOZZ	2520-00-395-7722	A14132	00736	.BREATHER AIR AIR PP CKT 203................................	EA	2
152	2	MFOZZ		44022101	27315	.HOSF ASSEMBLY ACTUATOR BREATHER..............................	EA	2
152		PCOZZ		MS39262-6	96906	..HOSE RUBBER 3-8 BREATHER HOSE ASSY..........................	FT	V
152	3	PAOZZ	4730-00-254-622P	7350896	19207	.ELBOW,PIPE TO TUBE 90 DEGREE MALE............................	EA	1
152	4	PAOZZ	5305-00-984-6209	MS35206-262	96906	.SCREW CAP HEXAGON NO 10-24X7-16 HOSE CLMP MTG................	EA	2
152	5	PAOZZ	5340-00-05C-274C	MS21333-75	96906	.CLAMP LOOP STEEL 3-4 HOSE MTG................................	EA	2
152	6	PAOZZ	5340-0C-05C-2740	MS21333-75	96906	.CLAMP,LOOP 3-4 HOSE MTG......................................	EA	2
152	7	MFOZZ		44023904	27315	.HOSE ASSEMBLY AIR PP CKT 203CC...............................	EA	1
152		PCOZZ		MS39262-6	96906	..HOSE RUBBER CKT 203CC HOSE ASSY.............................	FT	V
152	8	PAOZZ	4730-0C-266-053P	MS35869-2-3	96906	.ADAPTER,STRAIGHT 45DEG FLARE VALVE TO AIR CHAMBER............	EA	2
152	9	MFOZZ		44023503	27315	.HOSE ASSY,NONMETALL BRAKE ACTUATOR HOSE- AIR PIPING CIRCUIT 203BB..	EA	1
152		PAOZZ	9905-00-535-7777	MS39020-25	96906	..BAND,MARKER AIR PP CKT 203BB................................	EA	2
152		PCOZZ		MS35262-6	96906	..HOSE RUBBER AIR PP CKT 203BB-TUBE ASSY......................	FT	V
152	10	XBOZZ	4730-00-266-C538	MS35869-2-3	96906	.ADAPTER,STRAIGHT AIR PP CKT 203BB............................	EA	1
152	11	MFOZZ		44021402	27315	.HOSE ASSY RUBBER AIR PP CKT 205W.............................	EA	1
152		XAFZZ		13215E7641-1	97403	..ADAPTER,STRAIGHT AIR PP CKT 205W-HOSE.......................	EA	1
152		XAFZZ		13215E7642-6	97403	..ADAPTER,STRAIGHT AIR PP CKT 205W-HOSE.......................	EA	1
152		PAOZZ	9905-00-935-3863	MS39020-28	96906	..BAND,MARKER AIR PP CKT 205W HOSE ASSY.......................	EA	2
152	12	XBOZZ	4730-00-371-2142	45X4X4	79470	.ELBOW,PIPE TO TUBE 90DEG MALE TUBE TO........................	EA	1
152	13	MFOZZ		44021403	27315	.HOSF ASSY RUBBER AIR PP CKT 205T.............................	EA	1
152		XAFZZ		13215E7641-1	97403	..ADAPTER,STRAIGHT AIR PP CKT 205T-HOSE.......................	EA	1
152		PAOZZ	9935-00-935-7777	MS35020-25	96906	..BAND,MARKER AIR PP CKT 205T HOSE ASSY.......................	EA	2
152	14	XBOZZ	4730-00-371-2142	45X4X4	79470	.ELBOW,PIPE TOTUBE AIR PP CKT 205T............................	EA	1
152	15	MFOZZ		820P6406	27315	.TUBE ASSY COPPER AIR PP CKT 205C.............................	EA	1
152		PAOZZ	9905-00-935-3863	MS39020-28	96906	..BAND,MARKER AIR PP CKT 205C TUBE ASSY.......................	EA	2
152	16	XBOZZ	4730-00-435-172C	48X6X8	79470	.CONNECTOR MALE AIR PP CKT 205C...............................	EA	1
152	17	PAOZZ	5305-00-071-2241	MS90725-10	96906	.SCREW,CAP,HEXAGON 1-4-20 TEE MTG.............................	EA	2
152	18	PAOZZ	5310-00-582-5965	MS35338-44	96906	.WASHER LOCK SPRING 1-4 TEE MRG...............................	EA	2
152	19	XDOZZ		440204	27315	.TEE ANCHOR AIR PP CKT 205....................................	EA	2
152	20	MFOZZ		820P48501	27315	.TUBE ASSEMBLY AIR PP CKT 206G................................	EA	1
152		PAOZZ	9905-00-935-3863	MS39020-28	96906	..BAND,MARKER AIR PP CKT 206G-TUBE ASSY.......................	EA	2
152	21	MFOZZ		82CP456	27315	.TUBE ASSY COPPER AIR PP CKT 206E TUBE	EA	1
152		PAOZZ	9905-00-935-3863	MS35020-28	96906	..BAND,MARKER AIR PP CKT 206E TUBE ASSY.......................	EA	2
152	22	XBOZZ	4730-01-008-3588	45X6	79470	.TEE,PIPE TO TUBE 3-8 TUBEX1-4 PIPE-TUBE......................	EA	2
152	23	MFOZZ		820841	27315	.TUBE ASSEMBLY AIR PP CKT 206W................................	EA	1
152		PAOZZ	9905-00-935-3863	MS39020-28	96906	..BAND,MARKER AIR PP CKT 206W.................................	EA	2

(1) ILLUSTRATION (a) FIG NO.	(b) ITEM NO.	(2) SMR CODE	(3) NATIONAL STOCK NUMBER	(4) PART NUMBER	(5) FSCM	(6) DESCRIPTION USABLE ON CODE	(7) U/M	(8) QTY INC IN UNIT
152	24	XBOZZ	4730-00-265-6911	42X6	79470	.NIPPLE TUBE AIR PP CKT 206...................................	EA	1
152	25	MFOZZ		820P469	27315	.TUBE ASSEMBLY AIR PP CKT 206U TUBE ASSY....................	EA	1
152		PAOZZ	9905-00-935-3863	MS39020-28	96906	..BAND,MARKER AIR PP CKT 206U TUBE ASSY.....................	EA	2
152	26	XBOZZ	4730-00-439-6021	48X6X2	79470	.ADAPTER,STRAIGHT,PI 3-8-18 AIR PP CKT 206.................	EA	1
152	27	XBOZZ	4730-00-684-7248	49X10X6	79470	.ELBOW,PIPE TO TUBE 3-8-18X7-8-14 TUBE TO RSVR.............	EA	1
152	28	MFOZZ		820P489	27315	.TUBE ASSEMBLY AIR PP CKT 202A.............................	EA	1
152		PAOZZ	9905-00-935-3863	MS39020-28	96906	..BAND,MARKER AIR PP CKT 202A-TUBE ASSY....................	EA	2
152	29	XBOZZ	4730-00-266-0543	MS35869-4-5	96906	.ADAPTER,STRAIGHT AIR PP CKT 202...........................	EA	1
152	30	XBOZZ	4730-00-439-1720	48X6X8	79470	.CONNECTOR MALE TUBE TO TEE................................	EA	1
152	31	XBOZO	4730-00-265-9713	44U36018	27315	.TEE PIPE 3-4X1-2X1-2 TUBES TO VALVE.......................	EA	1
152	32	XBOZZ	4730-00-439-1722	48X6X6	79470	.ADAPTER STRAIGHT TUBE TO VALVE............................	EA	1
152	33	MFOZZ		820P488	27315	.TUBE ASSY COPPER AIR PP CKT 203A..........................	EA	1
152		PAOZZ	9905-00-935-3863	MS39020-28	96906	..MARKER,BAND AIR PP CKT 203A-TUBE ASSY....................	EA	2
152	34	MFOZZ		820P485D2	27315	.TUBE ASSEMBLY AIR PP CKT 203M.............................	EA	V
152		PAOZZ	9905-00-935-3863	MS39020-28	96906	..MARKER,BAND AIR PP CKT 203M TUBE ASSY....................	EA	2
152	35	XBOZZ	4730-01-008-3588	45X6	79470	.TEE TUBE TO PIPE 3-8 TUBEX1-4 PIPE-TUBE...................	EA	1
152	36	PAOZZ	5305-00-942-2196	MS18154-60	96906	.SCREW,CAP,HEXAGON 3-8-16X1 VALVE BRACKET..................	EA	2
152	37	PAOZZ	5310-00-637-9541	MS35338-46	96906	.WASHER,LOCK 3-8 VALVE BRACKET MRG.........................	EA	2
152	38	XDOZZ		816P673	27315	.BRACKET MOUNTING VALVE MTG................................	EA	1
152	39	MFOZZ		820P424	27315	.TUBE ASSEMBLY AIR PP CKT 205A.............................	EA	1
152		PAOZZ	9905-00-935-3863	MS39020-28	96906	..MARKER,BAND AIR PP CKT 205A TUBE ASSY....................	EA	2
152	40	XBOZZ	4730-00-439-1722	48X6X6	79470	.ADAPTER STRAIGHT AIR PP CKT 205A TUBE.....................	EA	1
152	41	XBOZZ	4730-00-891-9967	55X4	79470	.ELBOW,TUBE AIR PP CKT 205.................................	EA	1
152	42	MFOZZ		820N3404	27315	.TUBE ASSEMBLY AIR PP CKT 205N TUBE ASSY...................	EA	1
152		PAOZZ	9905-00-935-3863	MS39020-28	96906	..MARKER,BAND AIR PP CKT 205N TUBE ASSY....................	EA	2
152	43	XBOZZ	4730-00-265-6911	42X6	79470	.NIPPLE TUBE 3-8 TUBE AIR PP CKT 205.......................	EA	1
152	44	MFOZZ		820P432	27315	.TUBE ASSEMBLY AIR PP CKT 205R.............................	EA	1
152		PAOZZ	9905-00-935-3863	MS39020-28	96906	..MARKER,BAND AIR PP CKT 205R TUBE ASSY....................	EA	2
152	45	XBOZZ	4730-00-439-6021	48X6X2	79470	.ADAPTER,STRAIGHT 3-8 AIR PP CKT 205.......................	EA	1
152	46	MFOZZ		820P450	27315	.TUBE ASSEMBLY AIR PP CKT 205D.............................	EA	1
152		PAOZZ	9905-00-935-3863	MS39020-28	96906	..MARKER,BAND AIR PP CKT 205D TUBE ASSY....................	EA	2
152	47	XBOZZ	4730-00-450-9130	132C5E3843-1	97403	.ADAPTER,STRAIGHT 1-2-14X5-8-18 TUBE TO....................	EA	1
152	48	XBOZZ	4730-00-222-1839	MS51846-58	96906	.NIPPLE PIPE 1-2 TUBE AIR PP CKT 205.......................	EA	2
152	49	XBOZZ	4730-00-401-1412	145X6X6X8	72216	.TEE,PIPE TO TUBE 1-2-14X5-8-18............................	EA	1
152	50	MFOZZ		820P495	27315	.TUBE ASSEMBLY AIR PP CKT 205F.............................	EA	1
152		PAOZZ	9905-00-935-3863	MS39020-28	96906	..MARKER BAND AIR PP CKT 205F TUBE ASSY....................	EA	2
152	51	XDOZZ		447150204	27315	.CROSS TUBE FITTING 3-8 TUBE AIR PP CKT....................	EA	1
152	52	MFOZZ		820N43	27315	.TUBE ASSEMBLY AIR PP CKT 205E TUBE ASSY...................	EA	1
152		PAOZZ	9905-00-935-3863	MS39020-28	96906	..MARKER,BAND AIR PP CKT 205E TUBE ASSY....................	EA	2
152	53	XBOZZ	4730-00-265-6911	42X6	79470	.NIPPLE TUBE AIR PP CKT 205................................	EA	1

(1) ILLUSTRATION (a) FIG NO.	(b) ITEM NO.	(2) SMR CODE	(3) NATIONAL STOCK NUMBER	(4) PART NUMBER	(5) FSCM	(6) DESCRIPTION USABLE ON CODE	(7) U/M	(8) QTY INC IN UNIT
152	54	MFOZZ		820P468	27315	.TUBE ASSEMBLY AIR PP CKT 205S..............................	EA	1
152		PAOZZ	9905-00-935-3863	MS39020-28	96906	..BAND,MARKER AIR PP CKT 205S TUBE ASSY......................	EA	2
152	55	XBOZZ	4730-00-439-6021	48X6X2	79470	.ADAPTER,STRAIGHT TUBE TO VALVE..............................	EA	1
152	56	MFOZZ		820P418	27315	.TUBE ASSEMBLY AIR PP CKT 203C..............................	EA	1
152		PAOZZ	9905-00-935-3863	MS35020-28	96906	..BAND,MARKER AIR PP CKT 203C TUBE ASSY......................	EA	2
152	57	XBOZZ	4730-00-265-6911	42X6	79470	.NIPPLE TUBE AIR PP CKT 206..................................	EA	2
152	58	PAOZZ		820N78	27315	.TUBE ASSY,COPPER AIR PP CKT 206B,3/8 ODX.032 WALLX41.38"LG..	EA	1
152		PAOZZ	9905-00-935-3863	MS39020-28	96906	..BAND,MARKER AIR PP CKT 206B TUBE ASSY......................	EA	2
152	59	XBOZZ	4730-00-266-0538	MS35865-2-3	96906	.ADAPTER,STRAIGHT 3-8 TO1-4 TUBE TO VALVE....................	EA	1
152	60	XBOZZ	4730-00-439-6021	48X6X2	79470	.ADAPTER,STRAIGHT TUBE TO VALVE..............................	EA	1
152	61	MFOZZ		820P471	27315	.TUBE ASSEMBLY AIR PP CKT 201V TUBE ASSY.....................	EA	1
152		PAOZZ	9905-00-935-3863	MS39020-28	96906	..MARKER,BAND TUBE ASSY......................................	EA	2
152	62	XBOZZ		44X6	79470	.TEE TUBE AIR PP CKT 201.....................................	EA	1
152	63	MFOZZ		820N3405	27315	.TUBE ASSEMBLY AIR PP CKT 201R TUBE ASSY.....................	EA	1
152		PAOZZ	9905-00-935-3863	MS39020-28	96906	..MARKER,BAND AIR PP CKT 201R TUBE ASSY......................	EA	2
152	64	XBOZZ	4730-00-439-6021	48X6X2	79470	.ADAPTER,STRAIGHT TUBE.TO VALVE..............................	EA	1

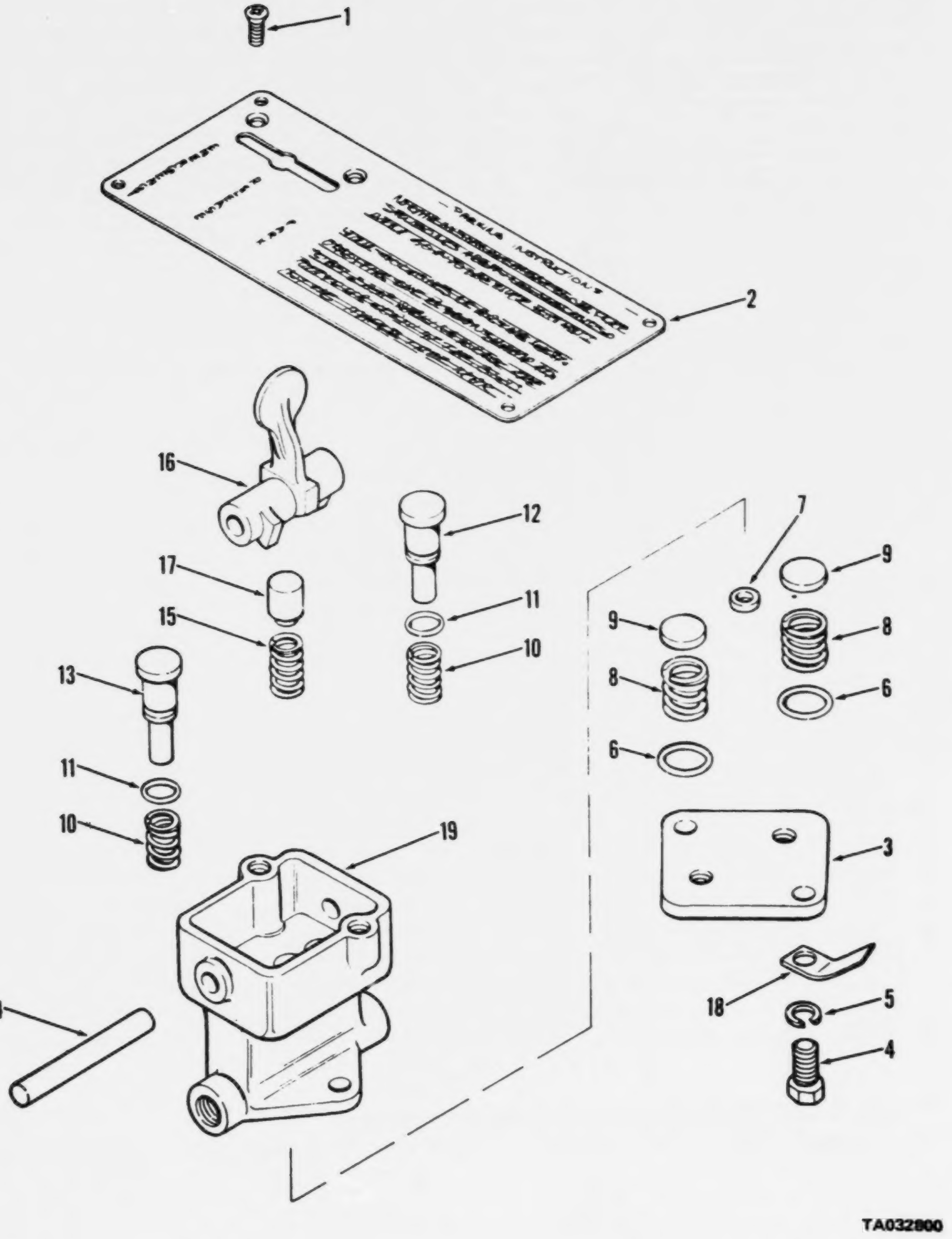

Figure 153. Valve assembly control: three-way

(1) ILLUSTRATION		(2)	(3)	(4)	(5)	(6)	(7)	(8)
(a) FIG NO.	(b) ITEM NO.	SMR CODE	NATIONAL STOCK NUMBER	PART NUMBER	FSCM	DESCRIPTION USABLE ON CODE	U/M	QTY INC IN UNIT
						FUNCTIONAL GROUP 53 AIR CHAMBERS,VALVES, HOSE AND TUBE ASSEMBLIES,FRONT AND REAR WHEELS		
153		PAOZZ	4820-00-436-3032	7012-10	06853	.VALVE CONTROL 3-WAY	EA	1
153	1	PAOZZ	5305-00-984-6209	MS35206-262	96906	..SCREW MACHINE INSTRUCTION PLATE	EA	2
153	2	PAOZZ	9905-01-018-5848	244625	06853	..PLATE INSTRUCTION VALVE	EA	1
153	3	XBOZZ		244631	06853	..PLATE INLET VALVE	EA	1
153	4	PAOZZ	5305-00-465-7854	203198	06853	..SCREW CAP HEXAGON INLET PLATE MOUNTING	EA	2
153	5	PAOZZ	5310-00-411-5248	235383	06853	..WASHER,LOCK INLET PLATE MOUNTING	EA	2
153	10	XOOZZ		245704	06853	..TAG MARKER DATE	EA	1

AMC FORM 1776, 1 OCT 73 (REPLACES AMC TEST FORMS 1753 AND 1754, 6 APR 70, WHICH WILL BE USED UNTIL 1 JUL 74) REPAIR PARTS LIST

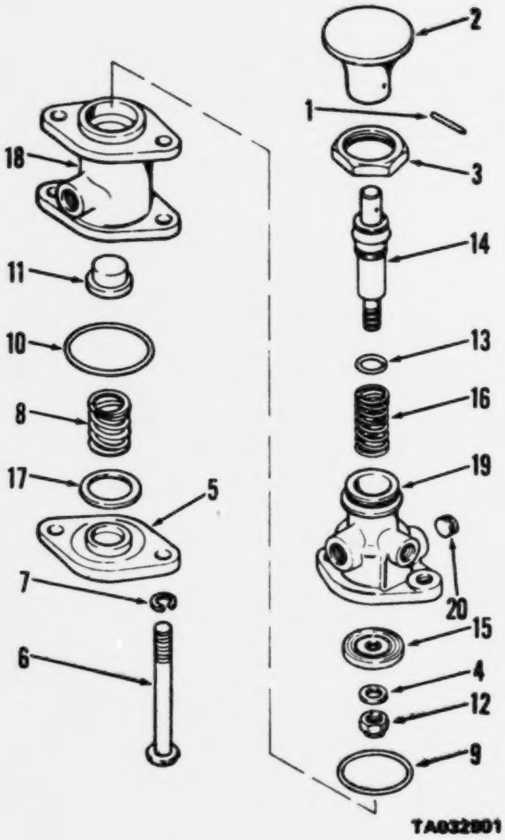

Figure 154. Valve assembly, control: push-pull

(1) ILLUSTRATION (a) FIG NO.	(b) ITEM NO.	(2) SMR CODE	(3) NATIONAL STOCK NUMBER	(4) PART NUMBER	(5) FSCM	(6) DESCRIPTION USABLE ON CODE	(7) U/M	(8) QTY INC IN UNIT
						FUNCTIONAL GROUP 53 AIR CHAMBERS,VALVES, HOSE AND TUBE ASSEMBLIES,FRONT AND REAR WHEELS		
154		PAOZZ	2530-00-254-5562	7012-09	06853	.VALVE CONTROL PUSH-PULL	EA	1
154	1	XDOZZ		238379	06853	..PIN SPRING PUSH BUTTON HOLDING	EA	1
154	2	XDOZZ	4820-00-410-6018	245186	06853	..PUSH BUTTON PLUNGER ACTUATING	EA	1
154	3	XAOZZ		239357	06853	..NUT PLAIN HEXAGON PUSH BUTTON RETAINING	EA	1
154	4	XAOZZ		202678	06853	..WASHER PLUNGER MOUNTING	EA	1
154	5	XAOZZ		243637	06853	..COVER VALVE LOWER VALVE BODY	EA	1
154	6	XDOZZ	5305-00-465-7845	243638	06853	..SCREW MACHINE COVER MOUNTING	EA	2
154	7	PAOZZ	5310-00-582-5965	MS35338-44	96906	..WASHER,LOCK 1/4 COVER MOUNTING	EA	2
154	8	PAOZZ	5360-01-020-7063	243635	06853	..SPRING HELICAL PISTON DRIVING	EA	1
154	9	PAOZZ	5330-00-484-1816	240480	06853	..GASKET VALVE BODY SEAL	EA	1
154	10	PAOZZ	5330-00-454-0369	238413	06853	..PACKING PREFORMED LOWER BODY SEAL	EA	1
154	11	XAOZZ		243634	06853	..PISTON SPRING DRIVEN	EA	1
154	12	XBOZZ	5310-01-024-7552	230401	06853	..NUT SELF-LOCKING PLUNGER MOUNTING	EA	1
154	13	PAOZZ	5330-00-454-0368	242552	06853	..PACKING,PREFORMED VALVE BODY SEAL	EA	1
154	14	XAOZZ		240273	06853	..PLUNGER QUICK RELEASE	EA	1
154		XAOZZ		240277	06853	..VALVE ASSEMBLY CONTROL	EA	1
154	15	XAOZZ		240276	06853	..INSERT VALVE	EA	1
154	16	XAOZZ		239330	06853	..SPRING HELICAL PLUNGER HOLDING	EA	1
154	17	PAOZZ	5330-00-179-1186	243636	06853	..GASKET LOWER COVER SEAL	EA	1
154	18	XAOZZ		243633	06853	..BODY VALVE LOWER	EA	1
154	19	XAOZZ		240381	06853	..BODY VALVE	EA	1
154	20	PAOZZ	4730-00-626-0228	233410	06853	..PLUG,PIPE VALVE BODY SEAL	EA	2

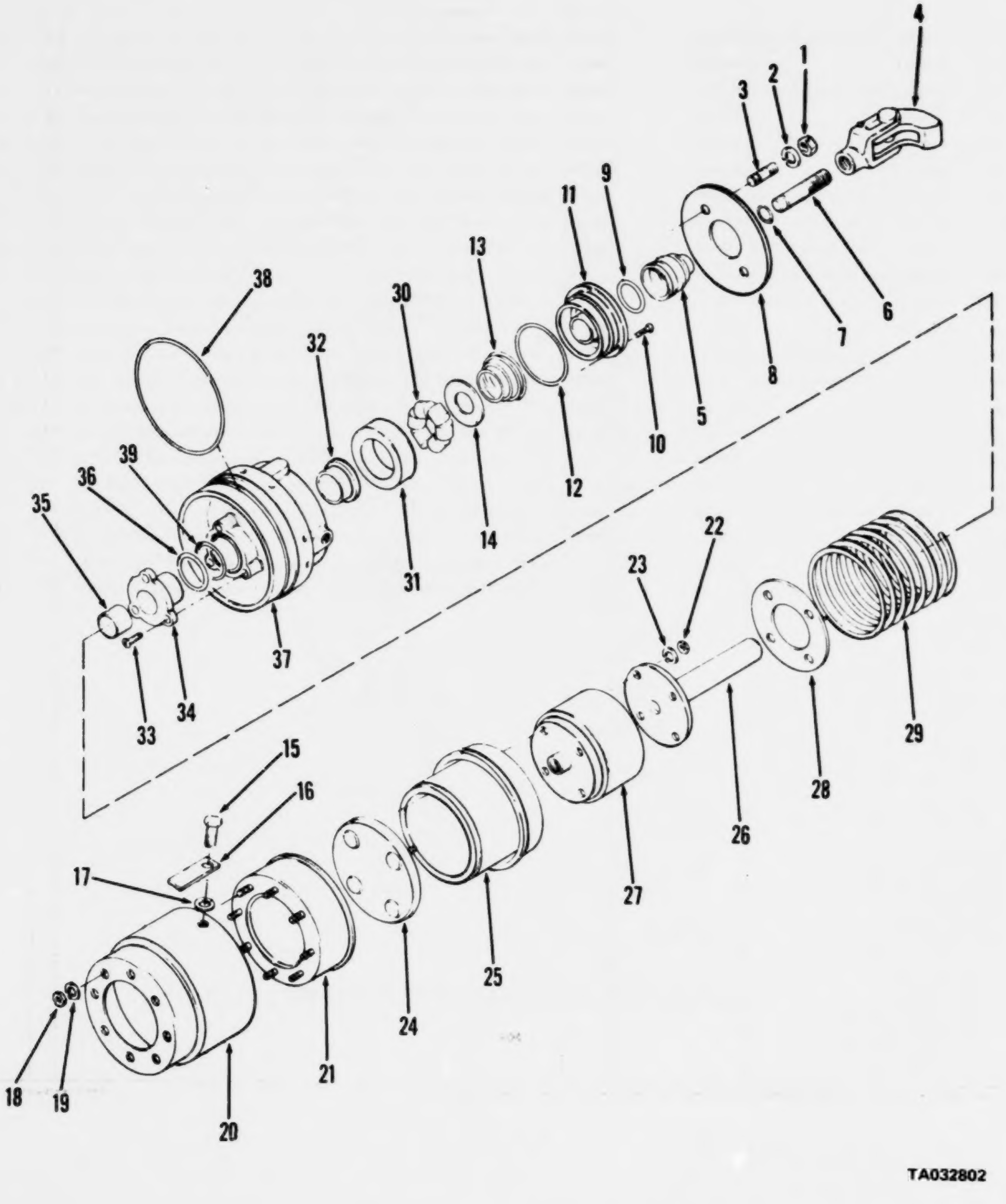

Figure 155. Chamber assembly, air brake

(1) ILLUSTRATION (a) FIG NO.	(b) ITEM NO.	(2) SMR CODE	(3) NATIONAL STOCK NUMBER	(4) PART NUMBER	(5) FSCM	(6) DESCRIPTION USABLE ON CODE	(7) U/M	(8) QTY INC IN UNIT
						FUNCTIONAL GROUP 53 AIR CHAMBERS,VALVES, HOSE AND TUBE ASSEMBLIES,FRONT AND REAR WHEELS		
195		PAOFZ	2530-00-951-3787	7016-03	06853	.CHAMBER,AIRBRAKE AIR..	EA	2
195	16	XBOZZ		243824	06853	..PLATE,INSTRUCTION AIR CHAMBER............................	EA	1

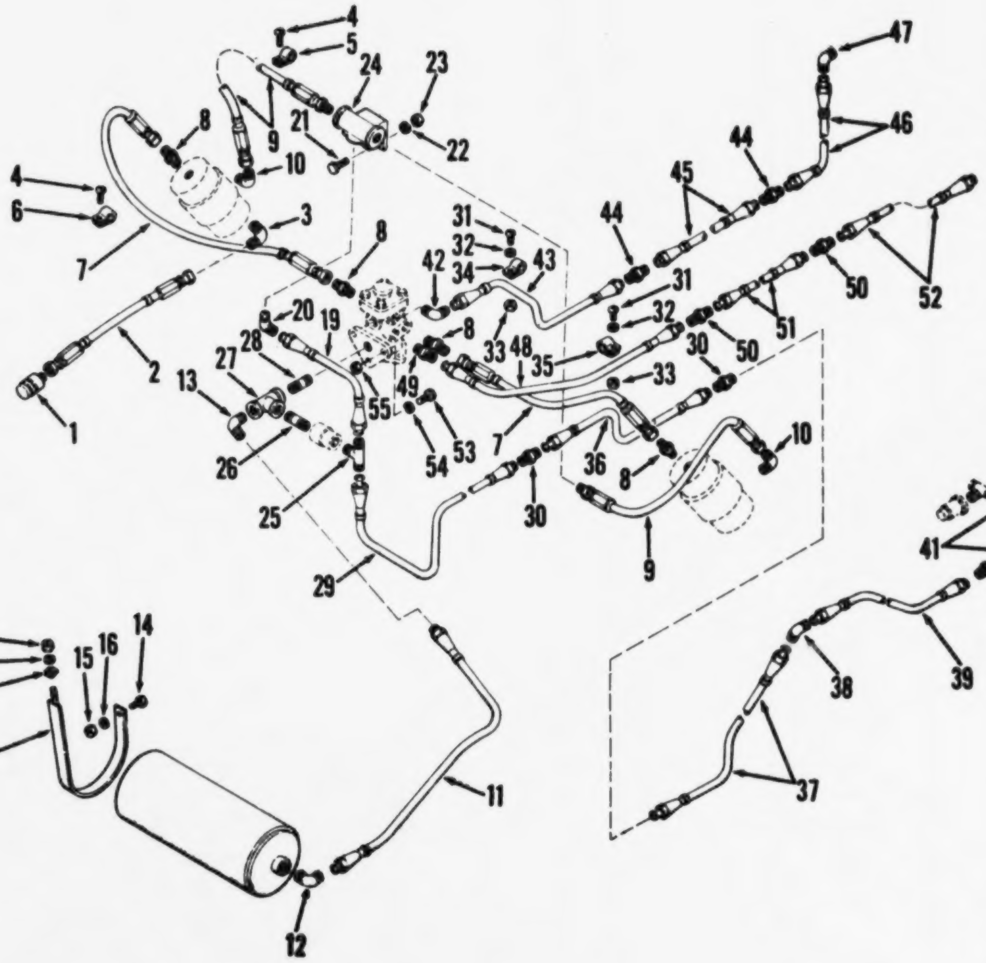

Figure 156. Hose and tube assemblies, rear brakes

(1) ILLUSTRATION (a) FIG NO.	(b) ITEM NO.	(2) SMR CODE	(3) NATIONAL STOCK NUMBER	(4) PART NUMBER	(5) FSCM	(6) DESCRIPTION USABLE ON CODE	(7) U/M	(8) QTY INC IN UNIT
						FUNCTIONAL GROUP 53 AIR CHAMBERS,VALVES, HOSE AND TUBE ASSEMBLIES,FRONT AND REAR WHEELS		
156	1	XBOZZ	2520-00-395-7722	A14132	00736	.BREATHER AIR	EA	1
156	3	XBOZZ	4730-00-254-6228	735C896	19207	.ELBOW,PIPE TO TUBE 90 DEGREE MALE	EA	1
156	4	PAOZZ	5305-00-984-6209	MS35206-262	96906	.SCREW MACHINE NO 10-24X7-16 HOSE CL7P MTG	EA	2
156	5	PAOZZ	5340-00-050-2740	MS21333-75	96906	.CLAMP LOOP STEEL 3-4 HOSE MTG	EA	2
156	6	PAOZZ	5340-00-724-7038	MS21333-76	96906	.CLAMP LOOP CUSHION 7-8 HOSE MTG	EA	2
156	7	MFOZZ		1-44Q235D4	27315	.HOSE ASSY: SINGLE WIRE BRAID,AIR PP,CKT 203CC	EA	1
156	8	PAOZZ	4730-00-266-0538	MS35869-2-3	96906	.ADAPTER,STRAIGHT 45DEG FLARE	EA	2
156	9	PCOZZ		44Q214D1	27315	.HOSE ASSEMBLY BRAKE ACT HOSE-CKT 205U	EA	1
156	9	PFOZZ	4730-01-028-1583	13215E7641-1	97403	..ADAPTER,STRAIGHT BRAKE ACT HOSE ASSY	EA	1
156	10	PAOZZ	4730-00-254-6225	13205E3838-3	97403	.ELBOW,PIPE TO TUBE 90DEG	EA	2
156	11	MFOZZ		820N26	27315	.TUBE ASSY,COPPER: RESERVOIR TO VALVE, CKT 202B	EA	1
156	12	XDOZZ		2003-12-1C	16717	.ELBOW TUBE MALE 90DEG TUBE TO AIR RSVR	EA	1
156	13	PAOZZ	4730-00-921-3245	45X10	79430	.ELBOW,PIPE TO TUBE TUBE TO RELAY VALVE	EA	1
156	14	XBOZZ		MS90725-109	96906	.SCREW,CAP,HEX HD: 1-2-13 X 1,RESERVOIR CLAMP MTG	EA	2
156	15	PAOZZ	5310-00-584-5272	MS35338-48	96906	.WASHER,LOCK 1-2 RSVR CLMP MTG	EA	4
156	16	PAOZZ	5310-00-768-0318	MS51967-14	96906	.NUT,PLAIN,HEXAGON 1-2-13 RSVR CLMP MTG	EA	4
156	17	XBOZZ		13206E4482-2	97403	.WASHER BEVELED 1-2 RSVR CLMP MTG	EA	2
156	18	XDOZZ		8167I291	27315	.STRAP SUPPORT	EA	2
156	19	PAOZZ	4730-00-011-8539	MS39167-5	96906	..NUT,TUBE COUPLING TEE TO VALVE TUBE ASSYCKT 205M	EA	2
156	20	PAOZZ	9905-00-935-3863	MS39020-28	96906	..MARKER,BAND TEE TO VALVE TUBE ASSY-CKT	EA	2
156	20	XBOZZ	4730-00-720-0119	49X6X8	79430	.ELBOW,PIPE TO TUBE 1-2-14 CKT 205M	EA	1
156	21	PAOZZ	5305-00-071-2241	MS90725-10	96906	.SCREW,CAP,HEXAGON 1-4-20 TEE MTG	EA	2
156	22	PAOZZ	5310-00-582-5965	MS35338-44	96906	.WASHER,LOCK 1-4 TEE MTG	EA	2
156	23	PAOZZ	5310-00-761-6882	MS51967-2	96906	.NUT,PLAIN,HEXAGON 1-4-20 TEE MTG	EA	2
156	24	XDOZZ		44Q204	27315	.TEE ANCHOR AIR SYSTEM	EA	1
156	25	XBOZZ	4730-00-401-1412	145X6X6X8	72216	.TEE,PIPE TO TUBE AIR PP CKT	EA	1
156	26	XBOZZ	4730-00-222-1839	MS51846-58	96906	.NIPPLE PIPE 1-2 AIR SYSTEM	EA	1
156	27	XDOZZ		44U36019	27315	.TEE PIPE 3-4X1-2X3-8 AIR SYSTEM	EA	1
156	28	XBOZZ	4730-00-193-2715	MS51846-81	96906	.NIPPLE,PIPE 3-4X2	EA	1
156	29	MFOZZ		1-820N28	27315	.TUBE ASSY COP AIR PP CKT 205L	EA	1
156	29	PAOZZ	4730-00-011-8539	MS39167-5	96906	..NUT,TUBE COUPLING AIR PP CKT 205L TUBE	EA	2
156	30	XBOZZ	4730-00-265-6911	42X6	79470	.NIPPLE TUBE 3-8 TUBE AIR PP CKT 205	EA	2
156	31	PAOZZ	5305-00-984-6212	MS35206-265	96906	.SCREW,MACHINE NO 10-24X3-4 TUBE CLMP MTG	EA	3
156	32	PAOZZ	5310-00-045-3296	MS35338-43	96906	.WASHER,LOCK NO 10 TUBE CLMP MTG	EA	3
156	33	PAOZZ	5310-00-534-9758	MS35649-202	96906	.NUT PLAIN HEXAGON NO 10-24 TUBE CLMP MTG	EA	3
156	34	XBOZZ	5340-00-764-7051	MS21333-69	96906	.CLAMP,LOOP TUBE MTG	EA	3
156	35	XBOZZ	5340-00-079-7837	MS21333-67	96906	.CLAMP,LOOP TUBE MTG	EA	2
156	36	MFOZZ		1-820N64D1	27315	.TUBE ASSEMBLY AIR PP CKT 205K	EA	1

(1) ILLUSTRATION (a) FIG NO.	(b) ITEM NO.	(2) SMR CODE	(3) FEDERAL STOCK NUMBER	(4) PART NUMBER	(5) FSCM	(6) DESCRIPTION USABLE ON CODE	(7) U/M	(8) QTY INC IN UNIT
156		PAOZZ	4730-00-011-8539	MS39167-5	96906	..NUT,TUBE COUPLING CKT 205KTUBE ASSY........................	EA	2
156		PAOZZ	9905-00-935-3863	MS39020-28	96906	..MARKER,BAND AIR PP CKT 205K TUBE ASSY......................	EA	2
156	37	MFOZZ		1-820N63D1	27315	.TUBE ASSY COPPER AIR PP CKT 205J............................	EA	1
156	38	XBOZZ		42X4	79470	.NIPPLE,TUBE,AIR PP,CKT 205..................................	EA	1
156	39	MFOZZ		1-820N64D7	27315	.TUBE ASSY COP AIR PP CKT 205H...............................	EA	1
156	40	XBOZZ		42X6	79470	.UNION,TUBE 3/8..	EA	1
156	41	MFOZZ		1-820N34D6	27315	.TUBE ASSY COPPER AIR PP CKT 205G............................	EA	1
156	42	XBOZZ	4730-00-254-6228	49X6X6	79470	.ELBOW,PIPE TO TUBE 5-8-18X3-8-18............................	EA	1
156		PAOZZ	4710-00-277-5527	WWT775	81349	.TUBE COPPER AIR PP CKT 203Z MFR FM 3-80DXX.032WALLX 51.75 IN LG..	EA	1
156	43	MFOZZ		1-820P406	27315	.TUBE ASSY,COP: AIR PP, CKT 203U.............................	EA	1
156	44	XBOZZ		42X6	79470	.NIPPLE,TUBE: AIR PP,CKT 203T................................	EA	2
156	45	MFOZZ		1-820P64D5	27315	.TUBE ASSY,COP: AIR PP,CKT 203Z..............................	EA	1
156	46	MFOZZ		1-820N63D5	27315	.TUBE ASSY COP: AIR,PP,CKT 203Z..............................	EA	1
156	47	XDOZZ		F107-1-4	90480	.ELBOW,TUBE 1-4 TUBE AIR PP CKT 203..........................	EA	1
156	48	MFOZZ		1-820N27	27315	.TUBE ASSY COP: AIR PP,CKT 206M..............................	EA	1
156	49	XBOZZ	4730-00-439-1722	48X6X6	79470	.ADAPTER STRAIGHT AIR PP CKT 206.............................	EA	1
156	51	MFOZZ		820N63D4	27315	.TUBE ASSY COP AIR PP CKT 206S...............................	FT	V
156	53	XBOZZ	5305-00-269-3215	MS90725-65	96906	.SCREW,CAP,HEXAGON 3-8-16X1-4 RELAY VALVE MTG................	EA	6
156	54	PAOZZ	5310-00-060-9435	MS35338-55	96906	.WASHER LOCK 3-8 RELAY VALVE MTG.............................	EA	6
156	55	PAOZZ	5310-00-732-0558	MS51967-8	96906	.NUT,PLAIN,HEXAGON 3-8-16 RELAY VALVE MTG....................	EA	6

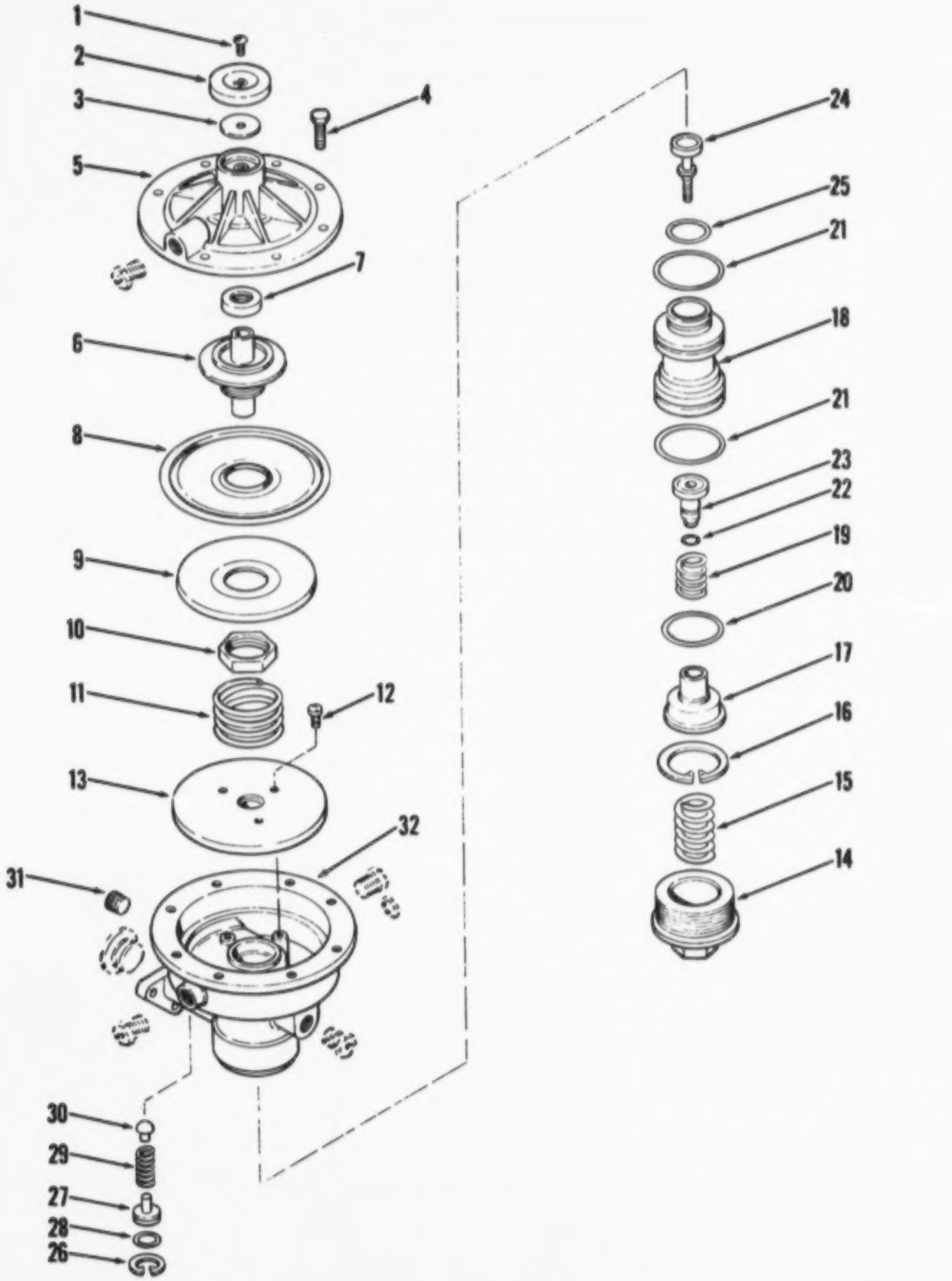

Figure 157. Valve assembly, relay

(1) ILLUSTRATION (a) FIG NO.	(b) ITEM NO.	(2) SMR CODE	(3) NATIONAL STOCK NUMBER	(4) PART NUMBER	(5) FSCM	(6) DESCRIPTION USABLE ON CODE	(7) U/M	(8) QTY INC IN UNIT
						FUNCTIONAL GROUP 53 AIR CHAMBERS,VALVES, HOSE AND TUBE ASSEMBLIES,FRONT AND REAR WHEELS		
157		PAOZZ	2530-00-118-8589	MS53004-1	96906	.VALVE,RELAY EMERGENCY AIR SY.TEM	EA	2
157	1	XDOZZ		30X15	40342	..SCREW THREAD CUTTING	EA	1
157	2	XAOZZ		601019	40342	..CAP EXHAUST RELAY VALVE	EA	1
157	3	XAOZZ		N11075A	40342	..DIAPHRAGM RELAY VALVE	EA	1
157	4	XAOZZ		3X1027	40342	..SCREW CAP HEXAGON RELAY VALVE	EA	8
157	5	XAOZZ		200553-A	40342	..COVER RELAY VALVE	EA	1
157	6	XAOZZ		200275A	40342	..PLUNGER RELAY VALVE	EA	1
157	7	XAOZZ		N1851A	40342	..SEAL VALVE EMERGENCY RELAY VALVE	EA	1
157	8	XAOZZ		200277C	40342	..DIAPHRAGM RELAY VALVE	EA	1
157	9	XAOZZ		101031A	40342	..PLATE DIAPHRAGM RELAY VALVE	EA	1
157	10	XAOZZ		2X346	40342	..NUT STRAINER RELAY VALVE	EA	1
157	11	XAOZZ		600375	40342	..SPRING HELICAL COMPRESSION	EA	1
157	12	XAOZZ		30X64	40342	..SCREW THREAD CUTTING	EA	1
157	13	XAOZZ		101502A	40342	..PLATE BAFFLE ASSEMBLY	EA	1
157	14	XAOZZ		101650A	40342	..END CAP RELAY VALVE	EA	1
157	15	XAOZZ		600792	40342	..SPRING RELAY VALVE	EA	1
157	16	XAOZZ		51X209	40342	..RING RETAINING RELAY VALVE	EA	1
157	17	XAOZZ		101318A	40342	..GUIDE VALVE RELAY GUIDE	EA	1
157	18	XDOZZ		101319A	40342	..PISTON VALVE	EA	1
157	19	XAOZZ		600399L	40342	..SPRING HLCPS RELAY VALVE	EA	1
157	20	PAOZZ	5330-00-179-6209	N11728GH	06721	..PACKING PRFORMD RELAY VALVE	EA	1
157	21	PAOZZ	5330-00-179-6207	N11728CK	06721	..PACKING PRFORMED RELAY VALVE	EA	1
157	22	PAOZZ	5330-00-179-6208	N11728CT	06721	..PACKING PRFORMED RELAY VALVE	EA	1
157	23	XAOZZ		N1941R	40342	..VALVE ASSEMBLY RELAY VALVE	EA	1
157	24	XAOZZ		96-243A	46522	..VALVE ASSEMBLY RELAY VALVE	EA	1
157	25	XAOZZ		N11728GH	06721	..PACKING PRFORMD RELAY VALVE	EA	1
157	26	XDOZZ		51X20	40342	..RING RETAINING RELAY VALVE	EA	1
157	27	XAOZZ		600894	40342	..PLUG VALVE RELAY VALVE	EA	1
157	28	PAOZZ	5330-00-179-6206	N11728BJ	06721	..PACKING PRFORMED RELAY VALVE	EA	1
157	29	XAOZZ		600794	06721	..SPRING RELAY VALVE	EA	1
157	30	XAOZZ		600857	40342	..VALVE RELAY VALVE	EA	1
157	31	XDOZZ		7X116	40342	..PLUG, PIPE VALVE	EA	1
157	32	XAOZZ		101514C	40342	..BODY VALVE RELAY VALVE	EA	1

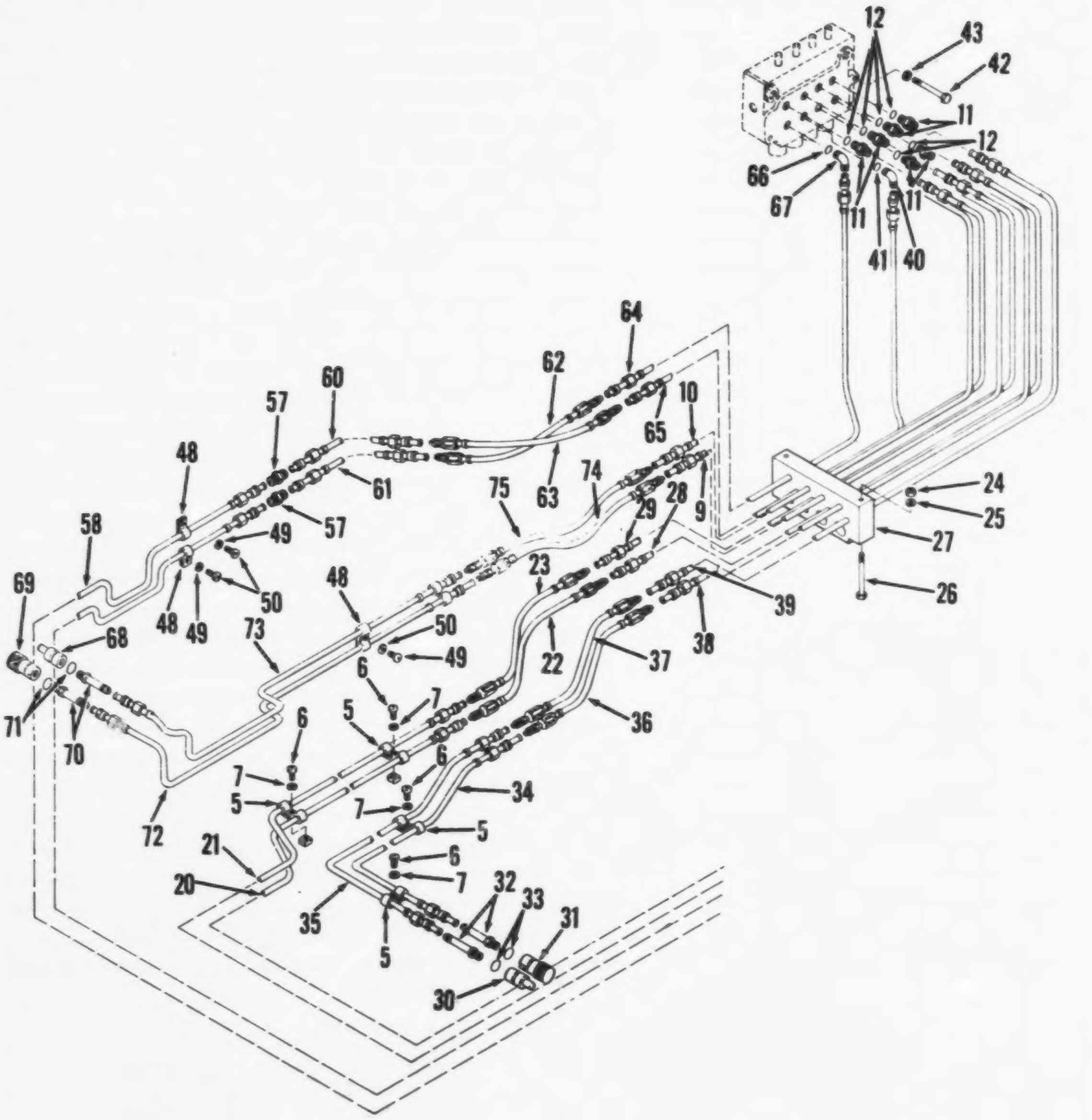

Figure 158. Hose and tube assemblies (Sheet 1 of 2)

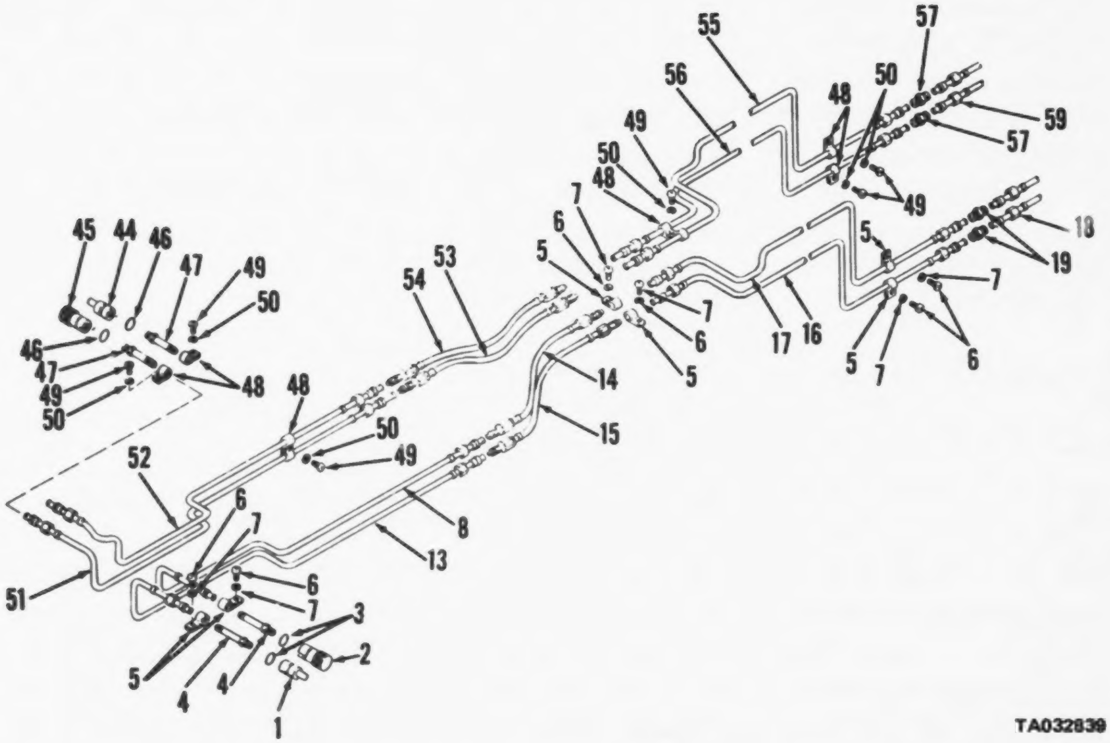

Figure 158. Hose and tube assemblies (Sheet 2 of 2)

(1) ILLUSTRATION (a) FIG NO.	(b) ITEM NO.	(2) SMR CODE	(3) NATIONAL STOCK NUMBER	(4) PART NUMBER	(5) FSCM	(6) DESCRIPTION USABLE ON CODE	(7) U/M	(8) QTY INC IN UNIT
						FUNCTIONAL GROUP 54 OUTRIGGER,HYDRAULIC VALVES,HOSE AND TUBING ASSEMBLIES		
158		A0000		8100J3989	27315	.HYDRAULIC SYS CARRIER..	EA	1
158	1	XBOZZ	4730-00-439-6020	13205E4420-1	97403	.COUPLING HALF QUICK TUBE ASSY ADAPTER TO.COUPLING BODY......	EA	1
158	2	XBOZZ	4730-00-471-0045	132C5E4421-1	97403	.COUPLING,BODY M320RT CARRIER-HYDRAULIC...... CONN RIGHT REAR OUTRIGGER..	EA	1
158	3	PAOZZ	5330-00-8C8-C794	MS28778-8	96906	.PACKING,PREFORMED M320RT CARRIER-COUPLING BODY AND ADAPTER..	EA	4
158	4	XBOZZ		MS39324-16	96906	.ADAPTER M320RT CARRIER-37DEG FLARE	EA	4
158	5	XBOZZ	5340-00-057-2904	MS21333-71	96906	.CLAMP LCOP M320RT CARRIER-STEEL CUSHIONED-HYDRAULIC LINE SUPPORT..	EA	22
158	6	XBOZZ		MS35206-263	96906	.SCREW,MACHINE: NO.10-24 X 1-2,CLAMP MTG....................	EA	22
158	7	PAOZZ	5310-00-045-3296	MS35338-43	96906	.WASHER,LOCK M320RT CARRIER-NO 10-CLAMP...UNTING HARDWARE....	EA	15
158	8	MFOZZ		820N7001	27315	.TUBE ASSY,METAL M320RT CARRIER-CIRCUIT...3F- -RIGHT REAR OUTRIGGER..	EA	1
158		PAOZZ	9905-00-935-3863	MS39020-28	96906	..BAND,MARKER M320RT CARRIER-CIRCUIT 113F-..................	EA	2
158	9	MFOZZ		820N5401	27315	.TUBE ASSEMBLY,METAL CIRCUIT 115-LEFT...... OUTRIGGER TO DIRECTIONAL CONTROL VALVE..................................	EA	1
158		PAOZZ	9905-00-935-3863	MS39020-28	96906	..BAND,MARKER CIRCUIT 115..................................	EA	2
158	10	MFOZZ		820N5404	27315	.TUBE ASSEMBLY,METAL CIRCUIT 114-LEFT...... OUTRIGGER TO DIRECTIONAL CONTROL VALVE..................................	EA	1
158		PAOZZ	9905-00-935-3863	MS39020-28	96906	..BAND,MARKER CIRCUIT 114..................................	EA	2
158	11	XDOZZ		MS39334-16	96906	.ADAPTER, TUBE OUTRIGGER....................................	EA	1
158	12	PAOZZ	5330-00-8C8-0794	MS28778-8	96906	.PACKING, PREFORMED OUTRIGGER................................	EA	1
158	13	MFOZZ		820N7002	27315	.TUBE ASSY METAL M320RT CARRIER-CIRCUIT...2F- -RIGHT REAR OUTRIGGER..	EA	1
158		PAOZZ	9905-00-935-3863	MS39020-28	96906	..BAND,MARKER M320RT CARRIER-CIRCUIT 112F..................	EA	2
158	14	MFOZZ		44022204	27315	.HOSE ASSY RBR M320RT CARRIER-CIRCUIT 113E-RIGHT REAR OUTRIGGER..	EA	1
158		XBOZZ	4730-01-025-0916	13215E7647-1	97403	..ADAPTER,STRAIGHT M320RT CARRIER-1-2DIA..BE X ODEG-HYDRAULIC HOSE CONNECTOR..	EA	2
158		PAOZZ	9905-00-935-7777	MS39020-29	96906	..BAND,MARKER M320RT CARRIER-CIRCUIT 113E..................	EA	2
158	15	MFOZZ		44022203	27315	.HOSE ASSY RBR M320RT CARRIER-CIRCUIT 112E-RIGHT REAR OUTRIGGER..	EA	1
158		XBOZZ	4730-01-025-0916	13215E7647-1	97403	..ADAPTER,STRAIGHT M320RT CARRIER-1-2DIA..BE X ODEG-HYDRAULIC HOSE CONNECTOR..	EA	2
158		PAOZZ	9905-00-935-7777	MS39020-29	96906	..BAND,MARKER M320RT CARRIER-CIRCUIT 112E..................	EA	2
158	16	MFOZZ		820P482	27315	.TUBE ASSEMBLY,METAL M320RT CARRIER-......CIRCUIT 112D-RIGHT REAR OUTRIGGER..	EA	1
158		PAOZZ	9905-00-935-3863	MS39020-28	96906	..BAND,MARKER M320RT CARRIER-CIRCUIT 112D..................	EA	2
158	17	MFOZZ		820N67	27315	.TUBE ASSEMBLY,METAL M320RT CARRIER-......CIRCUIT 113D-RIGHT REAR OUTRIGGER..	EA	1
158		PAOZZ	9905-00-935-3863	MS39020-28	96906	..BAND,MARKER M320RT CARRIER-CIRCUIT 113D..................	EA	2
158	18	MFOZZ		820P48402	27315	.TUBE ASSEMBLY,METAL M320RT CARRIER-......CIRCUIT 112C-RIGHT REAR OUTRIGGER..	EA	1
158		PAOZZ	9905-00-935-3863	MS39020-28	96906	..BAND,MARKER M320RT CARRIER-CIRCUIT 112C..................	EA	2
158	19	XDOZZ		44044015	27315	.FITTING, UNION OUTRIGGER HYDRAULIC LINES..................	EA	4

(1) ILLUSTRATION (a) FIG NO.	(b) ITEM NO.	(2) SMR CODE	(3) NATIONAL STOCK NUMBER	(4) PART NUMBER	(5) FSCM	(6) DESCRIPTION USABLE ON CODE	(7) U/M	(8) QTY INC IN UNIT
158		PAOZZ	9905-00-935-3863	MS39020-28	96906	..BAND,MARKER M320RT CARRIER-CIRCUIT 112B....................	EA	2
158		MFOZZ		820N7101	27315	..TUBE ASSEMBLY,METAL CIRCUIT 112B TUBE.TEEL- 1-200X0.049WALLX85.3"LG....................	EA	1
158	21	MFOOO		820N7102	27315	.TUBE ASSEMBLY,METAL M320RT CARRIER-......CIRCUIT 113B-RIGHT REAR OUTRIGGER....................	EA	1
158		PAOZZ	9905-00-935-3863	MS39020-28	96906	..BAND,MARKER M320RT CARRIER-CIRCUIT 113B....................	EA	2
158	22	MFOZZ		44Q222D7	27315	.HOSE ASSY RBR M320RT CARRIER-CIRCUIT 112A-RIGHT REAR OUTRIGGER....................	EA	1
158		XBOZZ	4730-01-025-0916	13215E7647-1	97403	..ADAPTER,STRAIGHT M320RT CARRIER-1-2DIA..BE X ODEG-HYDRAULIC HOSE CONNECTOR....................	EA	2
158		PAOZZ	9905-00-935-7777	MS39020-29	96906	..BAND,MARKER M320RT CARRIER-CIRCUIT 112A....................	EA	2
158	23	MFOZZ		44Q222D8	27315	.HOSE ASSY RBR M320RT CARRIER-CIRCUIT 113A-RIGHT REAR OUTRIGGER....................	EA	1
158		XBOZZ	4730-01-025-0916	13215E7647-1	97403	..ADAPTER,STRAIGHT M320RT CARRIER-1-2DIA..BE X ODEG-HYDRAULIC HOSE CONNECTOR....................	EA	2
158		PAOZZ	9905-00-935-7777	MS39020-29	96906	..BAND,MARKER M320RT CARRIER-CIRCUIT 113A....................	EA	2
158	24	PAOZZ	5310-00-851-2682	MS35691-17	96906	.NUT PLAIN HEX M320RT CARRIER-NO 3-8-16-..BE SUPPORT MTG HARDWARE....................	EA	2
158	25	PAOZZ	5310-00-637-9541	MS35338-46	96906	.WASHER,LOCK M320RT CARRIER-NO 3-8-TUBE...PPORT MTG HARDWARE.	EA	2
158	26	PAOZZ	5305-00-269-3226	MS90725-76	96906	.SCREW CAP HX HD M320RT CARRIER-NO 3-8-16X4-1-4LG-TUBE SUPPORT MTG HARDWARE....................	EA	2
158	27	XDOZZ		816N273	27315	.SUPPORT TUBE M320RT CARRIER....................	EA	1
158	28	MFOZZ		820N5402	27315	.TUBE ASSEMBLY,METAL M320RT CARRIER-......CIRCUIT 112-RIGHT REAR OUTRIGGER....................	EA	1
158	29	MFOZZ		820N5405	27315	.TUBE ASSEMBLY,METAL M320RT CARRIER-......IT 113-RIGHT REAR OUTRIGGER....................	EA	1
158		PAOZZ	9905-00-935-3863	MS39020-28	96906	..BAND,MARKER M320RT CARRIER-CIRCUIT 113....................	EA	2
158	30	XBOZZ	4730-00-439-6020	13205E4420-1	97403	.COUPLING,HALF QUICK M320RT CARRIER-TUBE..SSY ADAPTER TO COUPLING BODY....................	EA	1
158	31	XBOZZ	4730-00-471-0045	13205E4421-1	97403	.COUPLING BODY M320RT CARRIER-HYDRAULIC...PING CONNECTOR TO RIGHT FRONT OUTRIGGER....................	EA	1
158	32	XBOZZ	4730-00-173-1881	MS39324-12-16	96906	.ADAPTER,STRAIGHT TUBE,HYDRAULIC LINE.....ECTOR....................	EA	4
158	33	PAOZZ	5330-00-808-0794	MS28778-8	96906	.PACKING, PREFORMED COUPLING....................	EA	1
158	34	MFOZZ		820N6801	27315	.TUBE ASSEMBLY,METAL M320RT CARRIER-......T 111B-RIGHT FRONT OUTRIGGER....................	EA	1
158		PAOZZ	9905-00-935-3863	MS39020-28	96906	..BAND,MARKER M320RT CARRIER-CIRCUIT 111B....................	EA	2
158	35	MFOZZ		820N6802	27315	.TUBE ASSEMBLY,METAL M320RT CARRIER-......T 110B-RIGHT FRONT OUTRIGGER....................	EA	1
158		PAOZZ	9905-00-935-3863	MS39020-28	96906	..BAND,MARKER M320RT CARRIER CIRCUIT 110B....................	EA	2
158	36	MFOZZ		44Q222D5	27315	.HOSE ASSY RBR M320RT CARRIER-CIRCUIT 111A-RIGHT FRONT OUTRIGGER....................	EA	1
158		XBOZZ	4730-01-025-0916	13215E7647-1	97403	..ADAPTER,STRAIGHT M320RT CARRIER-1-2DIA..BE X ODEG-HYDRAULIC HOSE CONNECTOR....................	EA	2
158		PAOZZ	9905-00-935-7777	MS39020-29	96906	..BAND,MARKER M320RT CARRIER-CIRCUIT 111A....................	EA	2
158	37	MFOZZ		44Q222D6	27315	.HOSE ASSY R M320RT CARRIER-CIRCUIT 110A..IGHT FRONT OUTRIGGER....................	EA	1
158		XBOZZ	4730-01-025-0916	13215E7647-1	97403	..ADAPTER,STRAIGHT M320RT CARRIER 1-2DIA..BE X ODEG-HYDRAULIC HOSE CONNECTOR....................	EA	2
158		PAOZZ	9905-00-935-7777	MS39020-29	96906	..BAND,MARKER M320RT CARRIER-CIRCUIT 110A....................	EA	2

(1) ILLUSTRATION (a) FIG NO.	(b) ITEM NO.	(2) SMR CODE	(3) NATIONAL STOCK NUMBER	(4) PART NUMBER	(5) FSCM	(6) DESCRIPTION USABLE ON CODE	(7) U/M	(8) QTY INC IN UNIT
158	38	MFOZZ		820N54D3	27315	.TUBE ASSEMBLY,METAL M320RT CARRIER-...........RIGHT FRONT OUTRIGGER..	EA	1
158		PAOZZ	9905-00-935-3863	MS3902C-28	96906	..BAND,MARKER M320RT CARRIER-CIRCUIT 110....................	EA	2
158	39	MFOZZ		820N54D6	27315	.TUBE ASSEMBLY,METAL M320RT CARRIER-...........RIGHT FRONT OUTRIGGER..	EA	1
158		PAOZZ	9905-00-935-3863	MS39020-28	96906	..BAND,MARKER M320RT CARRIER-CIRCUIT 111....................	EA	2
158	40	XBOZZ	4730-00-892-2066	44Z42106	27315	.ELBOW,TUBE TO BOSS 90 DEG 3-8 -STRAIGHT....THREAD WITH ORING-TUBE ASSY ADAPTER..	EA	1
158	41	PAOZZ	5330-00-8C8-0794	MS28778-8	96906	.PACKING,PREFORMED M320RT CARRIER-COUPLING BODY AND ADAPTER..	EA	6
158	42	PAOZZ	5305-00-470-5797	MS35206-354	96906	.SCREW,MACHINE M320RT CARRIER-NO. 5-16-18X3-4LG-DIRECTIONAL CONTROL VALVE..	EA	3
158	43	PAOZZ	531C-00-407-5566	MS35338-45	96906	.WASHER,LOCK M320RT CARRIER-NO. 5-16-... ....CONTROL VALVE MTG..	EA	3
158	44	XBOZZ	4730-00-471-C045	132C5E4421-1	97403	.COUPLING BODY M320RT CARRIER-HYDRAULIC....... CONN TO LEFT REAR OUTRIGGER..	EA	1
158	45	XBOZZ	4730-00-439-6020	13205E442C-1	97403	.COUPLING,HALF,QUICK M320RT CARRIER-TUBE.....ADAPTER TO COUPLING BODY..	EA	1
158	46	PAOZZ	533C-0C-8C8-C794	MS28778-8	96906	.PACKING,PREFORMED M320RT CARRIER-COUPLING BODY AND ADAPTER..	EA	6
158	47	XBOZZ	4730-00-117-3958	MS39324-8-8	96906	.ADAPTER,STRAIGHT 37DEG FLARE TO O RING...SS-HYDRAULIC PIPE ADAPTER TO CPLNG..	EA	5
158	48	XBOZZ	534C-CO-C57-2904	MS21333-71	96906	.CLAMP LOOP STELL CUSHIONED-HYDRAULIC LINE SUPPORT..........	EA	17
158	49	XBOZZ		MS35206-263	96906	.SCREW,MACHINE: NO.10-24 X 1-2,CLAMP MTG....................	EA	17
158	50	PAOZZ	5310-00-045-3296	MS35338-43	96906	.WASHER,LOCK NO.10-CLAMP MTG HARDWARE......................	EA	11
158	51	MFOZZ		820N69D2	27315	.TUBE ASSEMBLY,METAL CIRCUIT 117F- LEFT......REAR OUTRIGGER TO DIRECTIONAL CONTROLVALVE..	EA	1
158		PAOZZ	9905-00-935-3863	MS39020-28	96906	..BAND,MARKER CIRCUIT 117F..................................	EA	2
158	52	MFOZZ		820N69D1	27315	.TUBE ASSEMBLY,METAL CIRCUIT 116F- -LEFT.....REAR OUTRIGGER..	EA	1
158		PAOZZ	9905-00-935-3863	MS39020-28	96906	..BAND,MARKER CIRCUIT 116F..................................	EA	2
158	53	MFOZZ		44022202	27315	.HOSE ASSY RBR CIRCUIT 117E LEFT REAR.......................	EA	1
158		PAOZZ	9905-00-935-7777	MS39020-29	96906	..BAND,MARKER CIRCUIT 117E..................................	EA	2
158	54	MFOZZ		44022201	27315	.HOSE ASSY RBR CIRCUIT 116E-LEFT REAR.......................	EA	1
158		XBOZZ	4730-01-025-0916	13215E7647-1	97403	..ADAPTER,STRAIGHT 1-2DIA TUBE X ODEG-......... HOSE CONNECTOR : CKT 116E..	EA	2
158		PAOZZ	9905-00-935-7777	MS39020-29	96906	..BAND,MARKER CIRCUIT 116E..................................	EA	2
158	55	MFOZZ		820N72D1	27315	.TUBE ASSEMBLY,METAL CIRCUIT 117D LEFT.......REAR OUTRIGGER TO DIRECTIONAL CONTROLVALVE..	EA	1
158		PAOZZ	9905-00-935-3863	MS39020-28	96906	..BAND,MARKER CIRCUIT 117D..................................	EA	2
158	56	MFOZZ		820N72D2	27315	.TUBE ASSEMBLY,METAL CIRCUIT 116D-LEFT...... OUTRIGGER........	EA	1
158		PAOZZ	9905-00-935-3863	MS39020-28	96906	..BAND,MARKER CIRCUIT 116D..................................	EA	2
158	57	XBOZZ	4730-00-359-4731	8-37-4	92985	.FITTING UNION 1-2TUBE-HYDRAULIC LINE.......................	EA	4
158	58	MFOZZ		820P484D3	27315	.TUBE ASSEMBLY,METAL -CIRCUIT 117C-LEFT......REAR OUTRIGGER..	EA	1
158		MFOZZ		MS39020-28	96906	..BAND,MARKER CIRCUIT 117C..................................	EA	2
158	59	MFOZZ		820P484D4	27315	.TUBE ASSEMBLY,METAL -CIRCUIT 116C-LEFT......REAR OUTRIGGER..	EA	1
158		PAOZZ	9905-00-935-3863	MS39020-28	96906	..BAND,MARKER CIRCUIT 116C..................................	EA	2
158	60	MFOZZ		820P494D1	27315	.TUBE ASSEMBLY, -CIRCUIT 117B-LEFT REAR...... OUTRIGGER.......	EA	1

(1) ILLUSTRATION (a) FIG NO.	(b) ITEM NO.	(2) SMR CODE	(3) NATIONAL STOCK NUMBER	(4) PART NUMBER	(5) FSCM	(6) DESCRIPTION USABLE ON CODE	(7) U/M	(8) QTY INC IN UNIT
158		PAOZZ	9905-00-935-3863	MS39020-28	96906	..BAND,MARKER CIRCUIT 117B....................................	EA	2
158	61	MFOZZ		820P49402	27315	.TUBE ASSEMBLY,METAL CIRCUIT 116B-LEFT....FT REAR OUTRIGGER..	EA	1
158		PAOZZ	9905-00-935-3863	MS39020-28	96906	..BAND,MARKER CIRCUIT 116B....................................	EA	2
158	62	MFOZZ		440222012	27315	.HOSE ASSY RBR CIRCUIT 117A-LEFT REAR.....IGGER..............	EA	1
158		XBOZZ	4730-01-025-0916	13215E7647-1	97403	..ADAPTER,STRAIGHT 1-2DIA TUBE X 0DEG-....ULIC HOSE CONNECTOR : CKT 117A..	EA	2
158		PAOZZ	9905-00-935-7777	MS39020-29	96906	..BAND,MARKER CIRCUIT 117A....................................	EA	2
158	63	MFOZZ		440222011	27315	.HOSE ASSY RBR CIRCUIT 116A-LEFT REAR.....IGGER..............	EA	1
158		XBOZZ	4730-01-025-0916	13215E7647-1	97403	..ADAPTER,STRAIGHT 1-2DIA TUBE X 0DEG-....ULIC HOSE CONNECTOR : CKT 116A..	EA	2
158		PAOZZ	9905-00-935-7777	MS39020-29	96906	..BAND,MARKER CIRCUIT 117A....................................	EA	2
158	64	MFOZZ		820P40903	27315	.TUBE ASSEMBLY,METAL CIRCUIT 117-LEFT..... OUTRIGGER TO DIRECTIONAL CONTROL VALVE..	EA	1
158		PAOZZ	9905-00-935-3863	MS39020-28	96906	..BAND,MARKER CIRCUIT 117.....................................	EA	2
158	65	MFOZZ		820P40904	27315	.TUBE ASSEMBLY,METAL CIRCUIT 116-LEFT..... OUTRIGGER TO DIRECTIONAL CONTROL VALVE..	EA	1
158		PAOZZ	9905-00-935-3863	MS39020-28	96906	..BAND,MARKER CIRCUIT 116.....................................	EA	2
158	66	XBOZZ	4730-00-892-2066	44Z42106	27315	.ELBOW,TUBE TO BOSS STRAIGHT THREAD WITH..RING-90 DEG 1-2 TUBE..	EA	2
158	67	PAOZZ	5330-00-808-0794	MS28778-8	96906	.PACKING, PREFORMED TUBE COUPLING............................	EA	1
158	68	XBOZZ	4730-00-439-6020	13205E4420-1	97403	.COUPLING HALF,QUICK TUBE ASSY ADAPTER TO.COUPLING BODY......	EA	1
158	69	XBOZZ	4730-00-471-0045	13205E4421-1	97403	.COUPLING TUBE HYDRAULIC PIPING CONNECTOR.TO LEFT FRONT OUTRIGGER..	EA	1
158	70	XBOZZ		MS39324-8-8	96906	.ADAPTER, TUBE OUTRIGGER.....................................	EA	1
158	71	PAOZZ	5330-00-808-0794	MS28778-8	96906	.PACKING, PREFORMED COUPLING.................................	EA	1
158	72	MFOZZ		820N7401	27315	.TUBE ASSY METAL CIRCUIT 114B-LEFT FRONT..UTRIGGER...........	EA	1
158		PAOZZ	9905-00-935-3863	MS39020-28	96906	..BAND,MARKER CIRCUIT 114B....................................	EA	2
158	73	MFOZZ		820N7402	27315	.TUBE ASSY STEEL CIRCUIT 115B-LEFT FRONT..UTRIGGER...........	EA	1
158		PAOZZ	9905-00-935-3863	MS39020-28	96906	..BAND,MARKER CIRCUIT 115B....................................	EA	2
158	74	MFOZZ		440222014	27315	.HOSE ASSY RBR CIRCUIT 114A-LEFT FRONT....RIGGER.............	EA	1
158		XBOZZ	4730-01-025-0916	13215E7647-1	97403	..ADAPTER,STRAIGHT 1-2DIA TUBE X 0DEG-....ULIC HOSE CONNECTOR	EA	2
158		PAOZZ	9905-00-935-7777	MS39020-29	96906	..BAND,MARKER CIRCUIT 114A....................................	EA	2
158	75	MFOZZ		440222013	27315	.HOSE ASSY RBR CIRCUIT 115A-LEFT FRONT....RIGGER.............	EA	1
158		XBOZZ	4730-01-025-0916	13215E7647-1	97403	..ADAPTER,STRAIGHT 1-2DIA TUBE X 0DEG-....ULIC HOSE CONNECTOR	EA	2
158		PAOZZ	9905-00-935-7777	MS39020-29	96906	..BAND,MARKER CIRCUIT 115A....................................	EA	2

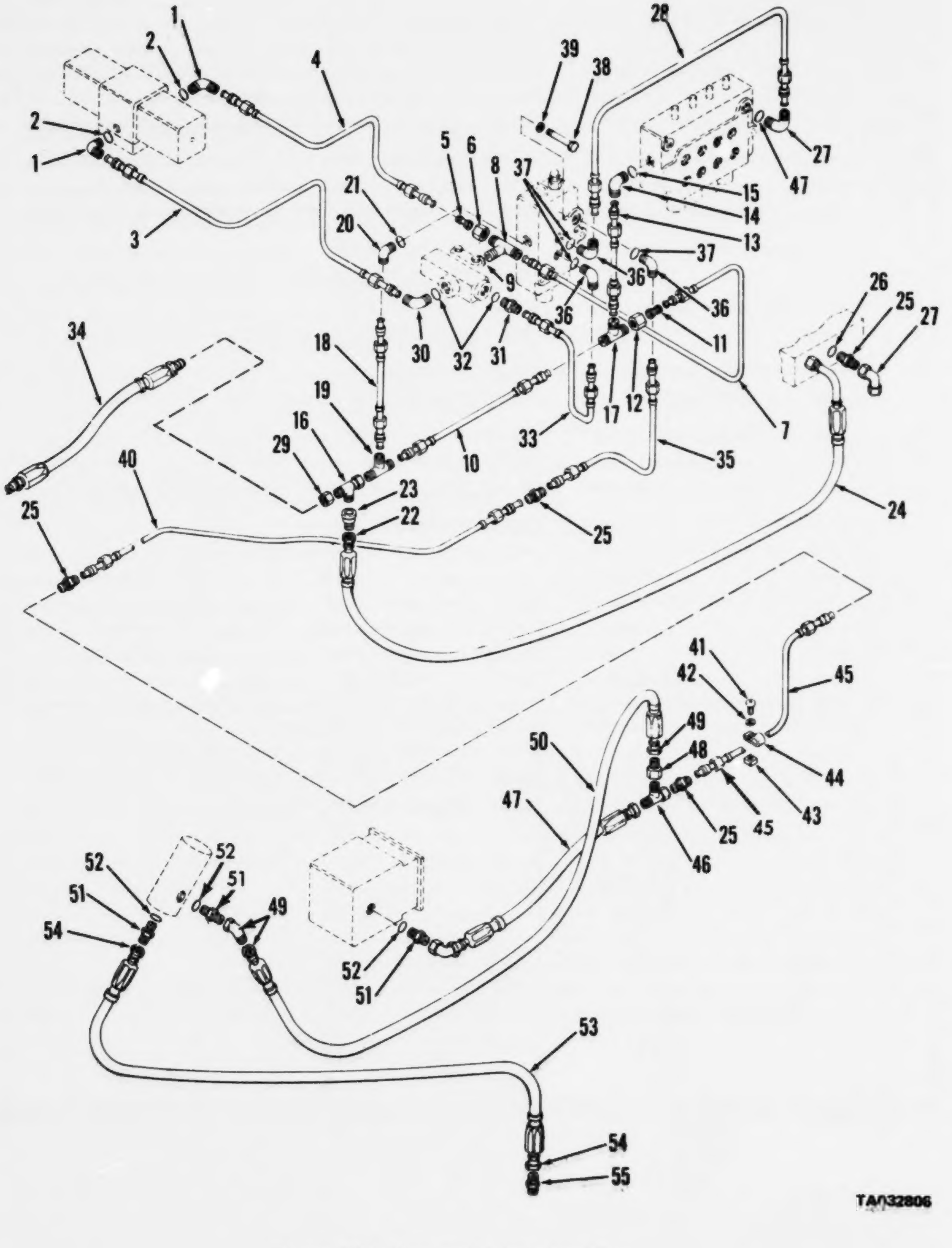

Figure 160. Hose and tube assemblies

(1) ILLUSTRATION (a) FIG NO.	(b) ITEM NO.	(2) SMR CODE	(3) NATIONAL STOCK NUMBER	(4) PART NUMBER	(5) FSCM	(6) DESCRIPTION USABLE ON CODE	(7) U/M	(8) QTY INC IN UNIT
						FUNCTIONAL GROUP 54 OUTRIGGER,HYDRAULIC		
						VALVES,HOSE AND TUBING ASSEMBLIES		
160	1	XDOZZ		849FS012X10	30327	.ELBOW 90DEG DOUBLE SOLENOID VALVE TO.....AULIC LINES-CIRCUITS 105 & 106A..	EA	2
160	2	PAOZZ	5330-00-804-5695	MS28778-6	96906	.PACKING PRFMD DOUBLE VALVE SOLENOID AND..ODEG ELBOWS........	EA	2
160	3	MFOZZ		820N45	27315	.TUBE ASSEMBLY CKT 106A-DBL VALVE SOL TO..LOW CONT.& RELIEF VALVE..	EA	1
160		PAOZZ	9905-00-935-3863	MS39020-28	96906	..BAND,MARKER CIRCUIT 106A................................	EA	2
160	4	MFOZZ		820P455	27315	.TUBE ASSY STEEL CKT 105 SOL VALVE TO............................	EA	1
160		PAOZZ	9905-00-935-3863	MS39020-28	96906	..BAND,MARKER CIRCUIT 105..................................	EA	2
160	5	XDOZZ		883FS08X06	30327	.REDUCER TUBE HYDRAULIC SYSTEM.............................	EA	2
160	6	PAOZZ	4730-00-762-1239	MS5153188	96906	.NUT,TUBE COUPLING HYDRAULIC SYSTEM.........................	EA	1
160	7	MFOZZ		820N49	27315	.TUBE ASSEMBLY,METAL FLOW CONTROL AND........ VALVE TO DIRECTIONAL CONTROL VALVECIRCIUT 106B........................	EA	1
160		XBOZZ	4730-00-933-0742	845FS08X08	30327	.TEE TUBE TO BOSS HYDRAULIC LINES AND FLOW CONTROL AND RELIEF VALVE..	EA	1
160	9	PAOZZ	5330-00-808-0794	MS28778-8	96906	.PACKING,PREFORMED FLOW CONTROL AND RELIEF VALVE AND TEE FITTING..	EA	4
160	10	MFOZZ		820P492D2	27315	.TUBE ASSY STEEL CKT106F-FLOW CONT &........ VALVE TO SEL CONT VALVE..	EA	1
160		XBOZZ	4730-01-050-6014	MS51533B12	96906	..SLEEVE,FLARED TUBE COUPLING NUT STOP......................	EA	2
160		PAOZZ	9905-00-935-7777	MS39020-29	96906	..BAND,MARKER CIRCUIT 106F..................................	EA	2
160	11	XBOZZ	4730-00-908-6667	C5015X12X8	79470	.REDUCER,TUBE TEE FITTING AND HYDRAULIC........................	EA	1
160	12	XBOZZ		20Z649D5	27315	.NUT TUBE TEE FITTING AND HYDRAULIC LINE....................	EA	1
160	13	MFOZZ		820P492D3	27315	.TUBE ASSY STEEL CKT 106D FLOW CONT &.....EF VALVE TO DIRECTIONAL CONT VALVE..	EA	1
160		PAOZZ	9905-00-935-7777	MS39020-29	96906	..BAND,MARKER CIRCUIT 106D..................................	EA	2
160	14	XBOZZ	4730-00-460-6130	13213E9799-1	97403	.ELBOW,TUBE TO BOSS HYDRAULIC LINE CIRCUIT 106D AND DIRECTIONAL CONTROL VALVE......................................	EA	1
160	15	PAOZZ	5330-00-285-9842	MS28778-10	96906	.PACKING PRFMD HYDRAULIC LINE CIRCUIT 106D ELBOW AND DIRECTIONAL CONT VALVE..	EA	5
156	16	XBOZZ		44Q217D8	27315	.TEE TUBE HYDRAULIC LINE CIRCUIT 106C AND. TEE FITTING.......	EA	1
160	17	XDOZZ	4730-00-934-7970	844FS12	30327	.TEE,TUBE HYDRAULIC LINE CIRCUITS 106F ANDD 106G.............	EA	1
160	18	MFOZZ		820P492D1	27315	.TUBE ASSY STEEL CIRCUIT 106G-SELECTOR....TROL VALVE HYDRAULIC PIPING..	EA	1
160		PAOZZ	9905-00-935-7777	MS39020-29	96906	..BAND,MARKER CIRCUIT 106G..................................	EA	2
160	19	XDOZZ		844FS12	30327	.FITTING,TEE..	EA	1
160	20	XBOZZ	4730-00-220-5574	2062-12-125	01276	.ELBOW,TUBE TO BOSS HYDRAULIC LINE CIRCUIT 106G AND SELECTOR CONTROL VALVE..	EA	1
160	21	PCOZZ	5330-00-251-8839	MS28778-12	96906	.PACKING,PREFORMED ELBOW AND SELECTOR........................	EA	2
160	22	XBOZZ		883FS12X08	30327	.REDUCER,TUBE TEE AND HYDRAULIC LINE........................	EA	1
160	23	PAOZZ	4730-00-812-0924	20Z649D5	27315	.NUT,TURE COUPLING TEE AND HYDRAULIC LINE.CIRCUIT 106C.......	EA	1
160	24	MFOZZ		44Q276D1	27315	.HOSE ASSY RUBBE CIRCUIT 106C STEERING....TROL VALVE TO SELECTOR CONTROL VALVF..	EA	1
160		XBOZZ	4730-00-451-2703	MS39290-8-88	96906	..COUPLING,HOSE HYDRAULIC HOSE CONNECTOR.....................	EA	1
160		XBOZZ		MS39293-8-88	96906	..COUPLING HOSE HYDRAULIC HOSE CONNECTOR.....................	EA	1

(1) ILLUSTRATION (a) FIG NO.	(b) ITEM NO.	(2) SMR CODE	(3) NATIONAL STOCK NUMBER	(4) PART NUMBER	(5) FSCM	(6) DESCRIPTION USABLE ON CODE	(7) U/M	(8) QTY INC IN UNIT
160		PAOZZ	9905-00-935-7777	MS39020-29	96906	..BAND,MARKER CIRCUIT 106C................................	EA	2
160		PCOZZ		MS39263-8	96906	..HOSE,NONMETALLIC HOSE ASSY 1-2NOM DIA..................	FT	1
160	25	XBOZZ	4730-00-173-1881	MS39324-12-16	96906	.ADAPTER,STRAIGHT HYDRAULIC LINE CIRCUIT..06C AND STEERING CONTROL VALVE..	EA	2
160	26	PAOZZ	5330-00-808-0794	MS28778-8	96906	.PACKING, PREFORMED TUBE..................................	EA	2
160	27	XBOZZ	4730-00-933-0728	8-1CC50XS	30780	.ELBOW,TUBE TO BOSS HYDRAULIC LINE CIRCUIT 104 AND SELECTOR CONTROL VALVE..	EA	2
160	28	MFOZZ		820P493	27315	.TUBE ASSEMBLY,METAL CIRCUIT 104-SELECTOR.CONTROL VALVE TO DIRECTIONAL CONT VALVE.....................................	EA	1
160		PAOZZ	9905-00-935-3863	MS39020-28	96906	..BAND,MARKER CIRCUIT 104.................................	EA	2
160	29	PAOZZ	4730-00-762-1239	MS5153188	96906	.NUT,TUBE COUPLING HYDRAULIC LINE CIRCUIT.105 AND FLOW CONTROL AND RELIEF VALVE.....................................	EA	1
160	30	XBOZZ	4730-00-892-2066	44Z421D6	27315	.ELBOW,TUBE TO BOSS HYDRAULIC LINE CIRCUIT 105 AND FLOW AND CONTROL RELIEF VALVE.....................................	EA	1
160	31	XDOZZ		883FS08X06	30327	.REDUCER, TUBE RELIEF VALVE...............................	EA	1
160	32	PAOZZ	5330-00-808-0794	MS28778-8	96906	.PACKING, PREFORMED TUBE..................................	EA	2
160	33	MFOZZ		820N73	27315	.TUBE ASSY STEEL CIRCUIT 103-FLOW CONTROL.AND RELIEF VALVE TO SEL CONT VALVE..	EA	1
160		PAOZZ	9905-00-935-3863	MS39020-28	96906	..BAND,MARKER CIRCUIT 103.................................	EA	2
160	34	MFOZZ		44Q28201	27315	.HOSE ASSY RBR CIRCUIT 106E-STEERING......OL VALVE TO MANIFOLD DRAIN..	EA	1
160		PAOZZ	4730-00-472-2611	MS39290-12-128	56906	..ADAPTER,STRAIGHT HYDRAULIC HOSE.........................	EA	1
160		PAOZZ	4730-00-451-2704	MS39292-12-128	96906	..ELBOW,TUBE TO HOSE HYDRAULIC HOSE.......OR..............	EA	1
160		PAOZZ	9905-00-935-7777	MS39020-29	96906	..BAND,MARKER CIRCUIT 106E................................	EA	2
160		PCOZZ	4720-00-080-3085	MS39263-12	96906	.HOSE,NONMETALLIC HOSE ASSY 3-4NOM DIA....................	FT	1
160	35	MFOZZ		820P475	27315	.TUBE ASSEMBLY METAL CIRCUIT 102A-SELECTOR CONTROL VALVE TO RELIEF VALVE..	EA	1
160		PAOZZ	9905-00-935-7777	MS39020-29	96906	..BAND,MARKER CIRCUIT 102A................................	EA	2
160	36	PAOZZ	4730-01-027-2195	44Q248D20	27315	.ADAPTER STRAIGHT HYDRAULIC LINE CKT 102A.& SEL CONT VALVE...	EA	1
160	37	PAOZZ	5330-00-285-9842	MS28778-10	96906	.PACKING, PREFORMED TUBE..................................	EA	1
160	38	PAOZZ	5306-00-225-8511	MS90725-47	96906	.BOLT MACHINE 5-16-18X3-3-4 SEL CONT VALVE MTG............	EA	2
160	39	PAOZZ	5310-00-407-9566	MS35338-45	96906	.WASHER,LOCK 5/16 SELECTOR CONTROL VALVE..TG..............	EA	2
160	40	MFOZZ		820N50	27315	.TUBE ASSEMBLY METAL CIRCUIT 102B-SELECTOR CONTROL VALVE TO RELIEF VALVE..	EA	1
160		PAOZZ	9905-00-935-3863	MS39020-28	96906	..BAND,MARKER CIRCUIT 102B................................	EA	2
160	42	PAOZZ	5310-00-045-3296	MS35338-43	96906	.WASHER,LOCK CLAMP MRG HARDWARE NO.10.....................	EA	1
160	43	XBOZZ	5310-00-982-4937	MS27040-8	96906	.NUT,PLAIN,SQUARE CLAMP MTG HARDWARE......................	EA	1
160	44	XDOZZ	5340-00-057-2904	MS21333-71	96906	.CLAMP TUBE HYDRAULIC LINE CIRCUIT 102C...................	EA	1
160	45	MFOZZ		820P446	27315	.TUBE ASSY STEEL CIRCUIT 102C-SELECTOR....TROL VALVE TO RELIEF VALVE..	EA	1
160		PAOZZ	9905-00-935-3863	MS39020-28	96906	..BAND,MARKER CIRCUIT 102C................................	EA	2
160	46	XBOZZ		844FS12	30327	.TEE TUBE 3/4X3/4...	EA	1
160	47	MFOZZ		44Q280D11	27315	.HOSE ASSY RBR CIRCUIT 102D-SELECTOR......OL VALVE TO RELIEF VALVE..	EA	1
160		XBOZZ	4730-00-472-2611	MS39250-12-128	96906	..ADAPTER,STRAIGHT,TU HYDRAULIC HOSE......................	EA	2

(1) ILLUSTRATION (a) FIG NO.	(b) ITEM NO.	(2) SMR CODE	(3) NATIONAL STOCK NUMBER	(4) PART NUMBER	(5) FSCM	(6) DESCRIPTION USABLE ON CODE	(7) U/M	(8) QTY INC IN UNIT
160		PAOZZ	9905-00-935-7777	MS39020-25	96906	..BAND,MARKER CIRCUIT 102D	EA	2
160	48	XBOZZ	4730-00-908-6667	C5015X12X8	79470	.REDUCER,TUBE	EA	1
160	49	XBOZZ	4730-00-812-0924	2C264509	27315	.NUT TUBE COUPLING 3/4 HYDRAULIC LINES	EA	1
160	54	MFOZZ		44032901	27315	.HOSE ASSY RBR CIRCUIT 102E-RELIEF VALVE	EA	1
160		XBOZZ	4730-01-024-0908	MS39292-10-88	96906	..COUPLING HOSE HYDRAULIC HOSE CONNECTOR	EA	1
160		XBOZZ	4730-00-451-4620	MS39292-8-88	96906	..ELBOW,TUBE TO HOSE HYDRAULIC HOSE	EA	1
160		PAOZZ	9905-00-935-7777	MS39020-25	96906	..BAND,MARKER CIRCUIT 102E	EA	2
160		XBOZZ		MS39324-10-10	96906	.ADAPTER TUBE HYDRAULIC LINE CIRCUITS 102E	EA	1
160	52	PAOZZ	5330-00-285-9842	MS28778-10	96906	.PACKING, PREFORMED TUBE	EA	2
160	53	MFOZZ		44027802	27315	.HOSE ASSY RBR CIRCUIT 107-RELIEF VALVE TO MANIFOLD	EA	1
160		PAOZZ	9905-00-935-7777	MS39020-25	96906	..BAND,MARKER CIRCUIT 107	EA	2
160		XDOZZ		440292012	27315	.NIPPLE TUBE HYDRAULIC LINE CIRCUIT 107	EA	1
160		XBOZZ		MS39324-10-10	96906	.ADAPTER,STRAIGHT,TU HYDRAULIC LINE.......T 107 AND RELIEF VALVE	EA	1

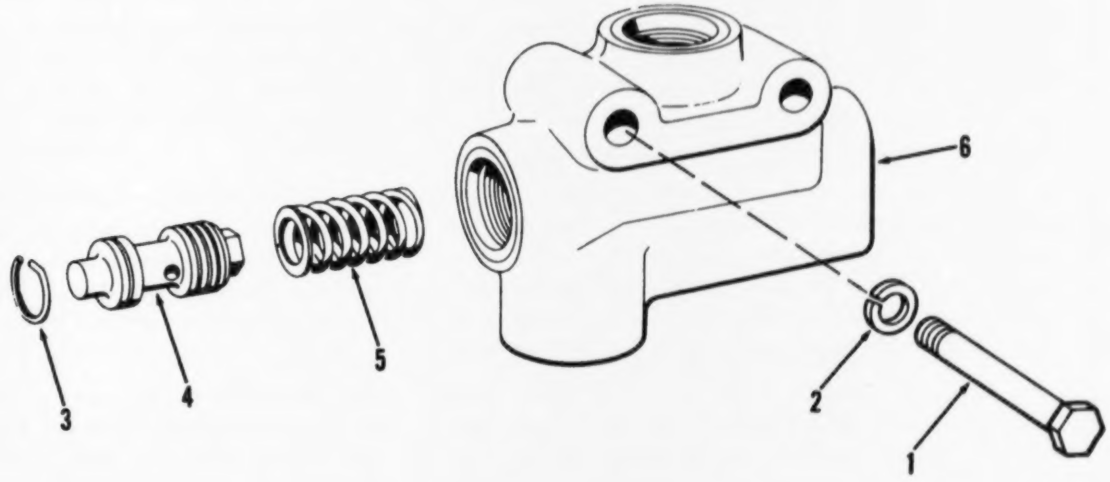

Figure 161. Valve assembly, flow control

(1) ILLUSTRATION (a) FIG NO.	(b) ITEM NO.	(2) SMR CODE	(3) NATIONAL STOCK NUMBER	(4) PART NUMBER	(5) FSCM	(6) DESCRIPTION USABLE ON CODE	(7) U/M	(8) QTY INC IN UNIT
						FUNCTIONAL GROUP 54 OUTRIGGER,HYDRAULIC		
						VALVES,HOSE AND TUBING ASSEMBLIES		
161	1	XBOZZ	5306-00-225-8505	MS90725-41	96906	.BOLT,MACHINE 5-16-18X2-1-4 VALVE..............................	EA	2
161	2	XBOZZ	5310-00-407-9566	MS35338-45	96906	.WASHER,LOCK 5-16 VALVE..	EA	2
161	3	PAOZZ	4820-00-458-8070	13213E9761	97403	.VALVE ASSY FLOW CONTROL,FLOW CONTROL AND RELIEF............	EA	1

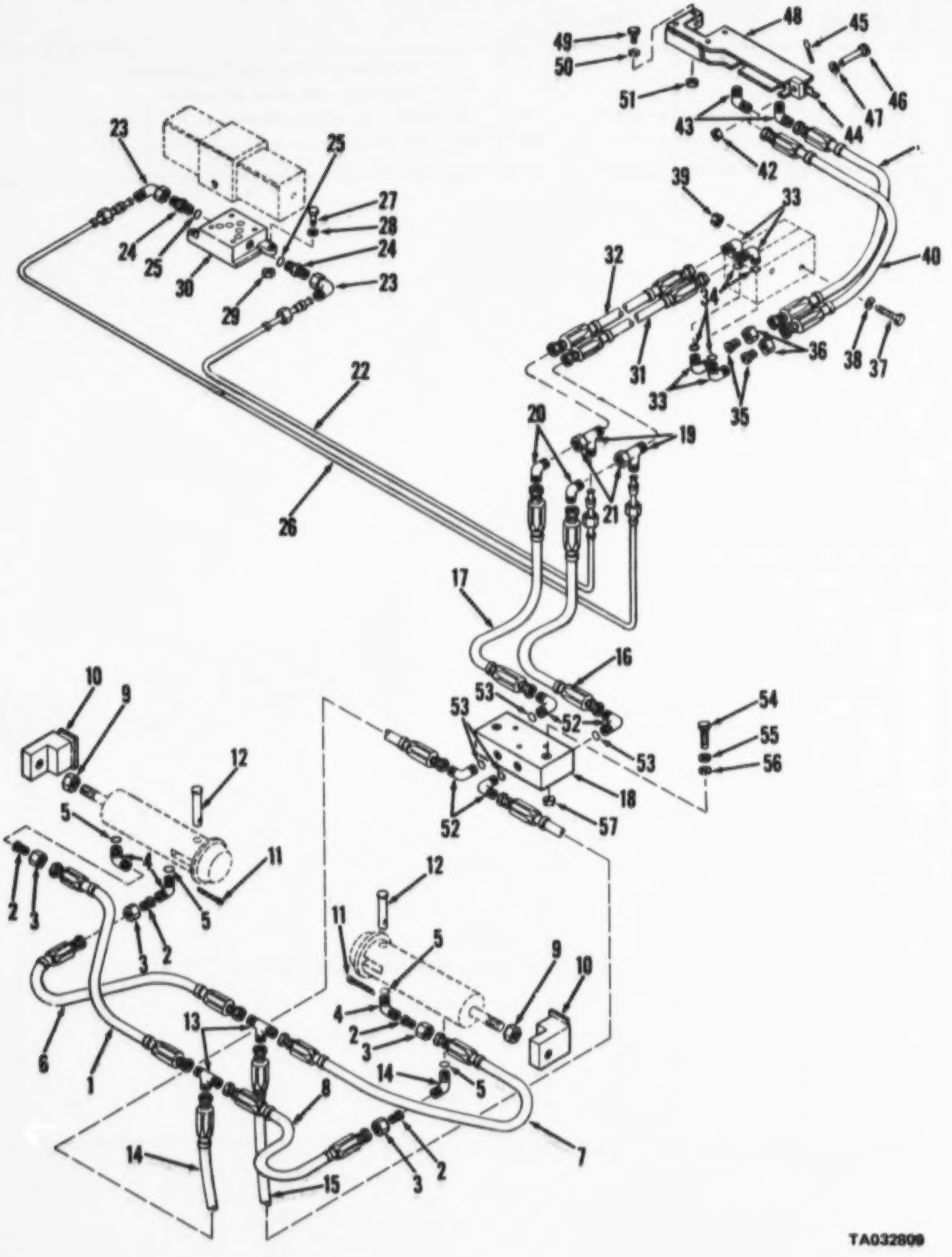

Figure 163. Hose and tube assemblies, steering

(1) ILLUSTRATION (a) FIG NO.	(b) ITEM NO.	(2) SMR CODE	(3) NATIONAL STOCK NUMBER	(4) PART NUMBER	(5) FSCM	(6) DESCRIPTION USABLE ON CODE	(7) U/M	(8) QTY INC IN UNIT
						FUNCTIONAL GROUP 55 STEERING,HYDRAULIC VALVES,HOSE AND TUBING ASSEMBLIES		
163	1	MFOZZ		44027109	27315	.HOSE ASSY RBR CIRCUIT 119E-LOCKCUT......... TO DOUBLE CHECK VALVE..	EA	1
163	2	PAOZZ	4730-00-455-8650	MS39290-6-68	96906	..ADAPTER,STRAIGHT HYDRAULIC HOSE........................	EA	1
163	2	XOOZZ		883FS08X06	30327	.REDUCER TUBE HYDRAULIC LINES TO LOCKOUT..YLINDERS...........	EA	4
163	3	PAOZZ	4730-00-762-1239	MS5152188	96906	.NUT,TUBE COUPLING HYDRAULIC LINES TO......... CYLINDERS.....	EA	4
163	4	PAOZZ	4730-00-892-2066	44Z42106	27315	.ELBOW,TUBE TO BOSS 1-2TUBE SIZE-HYDRAULIC LINES TO LOCKOUT CYLINDERS..	EA	4
163	5	XBOZZ		MS28778-8	96906	.PACKING,PREFORMED,ELBOW..............................	EA	2
163	6	MFOZZ		440271010	27315	.HOSE ASSY RBR CIRCUIT 120E-LOCKOUT......... TO DOUBLE CHECK VALVE..	EA	1
163		PCOZZ	4720-00-289-2615	MS29263-6	96906	..HOSE RUBBER 3-8NOM DIA CKT 119D..........................	FT	1
163	7	MFOZZ		44027106	27315	.HOSE ASSY RBR CIRCUIT 120D-LOCKOUT......... TO DOUBLE CHECK VALVE..	EA	1
163	8	MFOZZ		44027105	27315	.HOSE ASSY RBR CIRCUIT 119D-LOCKOUT.......ER TO DOUBLE CHECK VALVE..	EA	1
163	9	PAOZZ	5310-00-763-8901	MS51968-23	96906	.NUT PLAIN HEX LOCKCUT CYLINDER MTG.........................	EA	2
163	10	XOOZZ		920P393	27315	.STOP CYLINDER LOCKOUT CYLINDER MTG..........................	EA	2
163	11	PAOZZ	5315-00-241-7330	MS24665-304	96906	.PIN,COTTER LOCKOUT CYLINDER MTG HARDWARE....................	HD	1
163	12	PAOZZ		MS20392-10C83	96906	.PIN,STRAIGHT,HEADED LOCKOUT CYLINDER MTG.HARDWARE............	EA	1
163	13	XOOZZ	4730-00-441-2263	844FSC6	30327	.FITTING TEE HYDRAULIC LINE CIRCUITS 119C-D-E AND 120C-D-E...	EA	2
163	14	MFOZZ		44027107	27315	.HOSE ASSY RBR CIRCUIT 119C-LOCKOUT......... TO DOUBLE CHECK VALVE..	EA	1
163	15	MFOZZ		44027108	27315	.HOSE ASSY RBR CIRCUIT 120C-LOCKOUT......... TO DOUBLE CHECK VALVE..	EA	1
163		PAOZZ	4730-00-455-8650	MS39290-6-68	96906	..ADAPTER,STRAIGHT HYDRAULIC HOSE........................	EA	1
163	16	MFOZZ		44027101	27315	.HOSE ASSY RBR CIRCUIT 120B-DOUBLE CHECK..ALVE TO DOUBLE SOLENOID VALVE..	EA	1
163	17	MFOZZ		44027102	27315	.HOSE ASSY RBR CIRCUIT 119B-DOUBLE CHECK..ALVE TO DOUBLE SOLENOID VALVE..	EA	1
163	18	PAOZZ	4820-00-459-8295	13216E8031	97403	.VALVE,DBL CHECK: CARRIER HYD TUBE ASSY.....................	EA	1
163	20	XOOZZ	4730-00-883-0643	MS515C7A6	96906	.ELBOW,TUBE HYDRAULIC LINES CIRCUIT 119A-.20B AND TEE CONNECTORS..	EA	2
163	19	PAOZZ		C7924X6	79470	.FITTING,LOCKNUT: HYD LINES,CKT 119 BAND 120B................	EA	2
163	22	MFOZZ		820P481	27315	.TUBE ASSY STEEL CIRCUIT 119-DOUBLE CHECK.VALVE TO DOUBLE SOLENOID VALVE..	EA	1
163	21			44Q217D5	27315	.TEE TUBE,HYD LINE,CKT'S,119A AND 120B......................	EA	2
163	23	XOOZZ		44022305	27315	.ELBOW 90DEG HYDRAULIC LINES TO DOUBLE.......................	EA	2
163	26	MFOZZ		820P442	27315	.TUBE ASSEMBLY,METAL CIRCUIT 120-DOUBLE...ECK VALVE TO DOUBLE SOLENOID VALVE,3/8 OOX.035WALLX41"LG..........................	EA	1
163		MFOZZ		1-820P442	27315	..TUBING STEEL TUBE ASSY 3-8OOX.035WALL......................	FT	V
163	30	XOOZZ		PS015	50988	.SUBPLATE VALVE MTG PLATE FOR DOUBLE.........................	EA	1
163	31	MFOZZ		44027103	27315	.HOSE ASSY RBR CIRCUIT 120A-DOUBLE......... VALVE TO RELIEF AND CHECK CALVE..	EA	1
163	32	MFOZZ		82CP503D2	27315	.TUBE ASSEMBLY CIRCUIT 119A-DOUBLE......... VALVE TO RELIEF AND CHECK VALVE..	EA	1
163	33	PAOZZ	4730-00-143-3941	945FSC06XC6	30327	.ELBOW,TUBE TO BOSS 3-8 TUBE SIZE-.......... LINES AND RELIEF AND CHECK VALVES..	EA	4
163	34	PAOZZ	5330-00-804-5655	MS28778-6	96906	.PACKING, PREFORMED ELBOW....................................	EA	4

(1) ILLUSTRATION (a) FIG NO.	(b) ITEM NO.	(2) SMR CODE	(3) NATIONAL STOCK NUMBER	(4) PART NUMBER	(5) FSCM	(6) DESCRIPTION USABLE ON CODE	(7) U/M	(8) QTY INC IN UNIT
163	35	PAOZZ	4730-00-706-8711	083FS06XC4	30327	.REDUCER TUBE HYDRAULIC LINES AND RELIEF.... CHECK VALVES....	EA	2
163	36	PAOZZ	4730-00-858-3491	841FS06	30327	.NUT,TUBE COUPLING HYDRAULIC LINES AND.......... RELIEF AND CHECK VALVES........	EA	2
163	37	PAOZZ	5305-00-071-2511	MS90728-14	96906	.SCREW,CAP,HEXAGON RELIEF AND CHECK VALVE.MTG HARDWARE 1-4-20X1-2........	EA	4
163	38	PAOZZ	5310-00-582-5965	MS35338-44	96906	.WASHER,LOCK RELIEF AND CHECK VALVE MTG........	EA	4
163	39	PAOZZ	5310-00-761-6882	MS51967-2	96906	.NUT,PLAIN,HEXAGON 1-4-20 CHECK VALVE........	EA	4
163	40	MFOZZ		44Q26602	27315	.HOSE ASSY RBR CIRCUIT 120F-RELIEF AND...... VALVE TO CYLINDER........	EA	1
163		PCOZZ	4720-01-017-5127	MS39263-4	96906	..HOSE RUBBER HOSE ASSY 1-4NOM DIA........	FT	1
163		PAOZZ	9905-00-935-7777	MS39020-25	96906	..BAND,MARKER CIRCUIT 119F........	EA	2
163	41	MFOZZ		44Q266D1	27315	.HOSE ASSY,RUBBER:CHECK VALVE TO CYLINDER CKT 119F........	EA	1
163	42	PAOZZ	4730-00-187-0839	AN816-3	88044	.ADAPTER,STRAIGHT,PI HYDRAULIC LINES........ 119F & 120F TO CYLINDER........	EA	1
163	43	PAOZZ		MS20822-7	96906	.ELBOW,PIPE TO TUBE 1-2TUBE SIZE-HYDRAULIC LINES CIRCUITS 119F & 120F TO CYLINDER........	EA	1
163	44	XDOZZ		819T189	27315	.SHAFT CYLINDER:HYDRAULIC........	EA	1
163	45	PAOZZ	5315-00-842-3044	MS24665-283	96906	.PIN,COTTER SHAFT MTG HARDWARE........	EA	1
163	46	PAOZZ	5315-00-825-8353	MS20392-5C29	96906	.PIN,STRAIGHT,HEADED SHAFT MTG HARDWARE........	EA	1
163	47	PAOZZ	5310-00-087-7493	MS27183-13	96906	.WASHER FLAT CYLINDER MTG HARDWARE........	EA	1
163	48	XDOZZ		816A271	27315	.BRACKET MNTNG CYLINDER MTG........	EA	1
163	49	PAOZZ	5310-00-913-7020	MS51968-3	96906	.NUT PLAIN HEX BRACKET MTG HARDWARE-1-4-28........	EA	1
163	50	PAOZZ	5310-00-582-5965	MS35338-44	96906	.WASHER,LOCK BRACKET MTG HARDWARE........	EA	1
163	51	XBOZZ		MS90726-6	96906	.SCREW,CAP,HEX HD, 1/4-28 X 3/4,BRACKET MTG........	EA	4
163	52	XDOZZ	4730-01-029-7660	44Z42103	27315	.ELBOW,TUBE TO BOSS 3-8TUBE SIZE-HYDRAULIC LINES AND RELIEF AND CHECK VALVES........	EA	4
163	53	PAOZZ	5330-00-804-5655	MS28778-6	96906	.PACKING, PREFORMED ELBOW TO VALVE........	EA	4
163	54	PAOZZ	5305-00-071-2234	MS90725-17	96906	.SCREW,CAP,HEXAGON DOUBLE CHECK VALVE MTG.HARDWARE 1-4-20X2-3-4........	EA	1
163	55	PAOZZ	5310-00-823-8804	MS27183-9	96906	.WASHER FLAT DOUBLE CHECK VALVE MTG........	EA	1
163	56	PAOZZ	5310-00-582-5965	MS35338-44	96906	.WASHER, LOCK, 1/4, VALVE MOUNTING........	EA	4
163	57	XBOZZ	5310-00-761-6882	MS51967-2	96906	.NUT, PLAIN, HEX 1/4-20........	EA	4

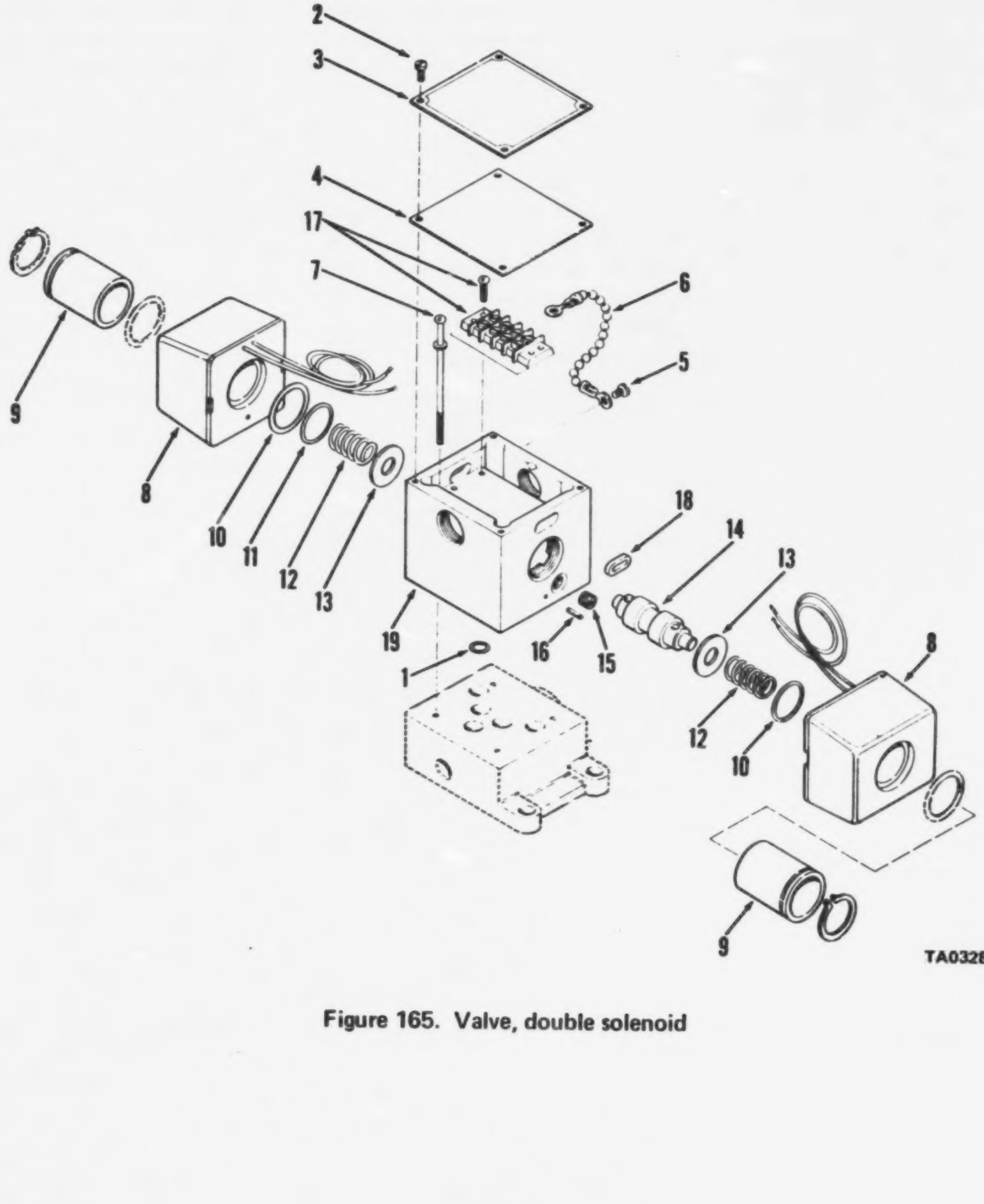

Figure 165. Valve, double solenoid

(1) ILLUSTRATION (a) FIG NO.	(b) ITEM NO.	(2) SMR CODE	(3) NATIONAL STOCK NUMBER	(4) PART NUMBER	(5) FSCM	(6) DESCRIPTION USABLE ON CODE	(7) U/M	(8) QTY INC IN UNIT
						FUNCTIONAL GROUP 55 STEERING,HYDRAULIC VALVES,HOSE AND TUBING ASSEMBLIES		
165		PAOZZ	4810-00-404-5819	13216E8020	97403	.VALVE DOUBLE CARRIER HYD TUBING	EA	1
165	6	XDOZZ		209C08	50988	..CHAIN COVER SOL VALVE	EA	1
165		XAOZZ		95666-24	50988	..SOLENOID ASSEMBLY VALVE	EA	2
165	8	XAOZZ		96666-24	50988	...SOLENOID DC VALVE	EA	1
165	9	XAOZZ		98666	50988	...TUBE SOLENOID INCL RET RING TUBE PIN	EA	1
165	13	XDOZZ		211401	50988	..WASHER CENTER SPOOL	EA	2
165	14	XAOZZ		213288	50988	..SPOOL VALVE SOLENOID VALVE	EA	1
165	17	XDOZZ		213265	50988	..TERMINAL BOARD INCL SCREWS	EA	1
165	18	XDOZZ		SP8558	50988	..GROMMET RUBBER HOUSING	EA	2

AMC FORM 1770, 1 OCT 73 (REPLACES AMC TEST FORMS 1753 AND 1754, 6 APR 70, WHICH WILL BE USED UNTIL 1 JUL 74) REPAIR PARTS LIST

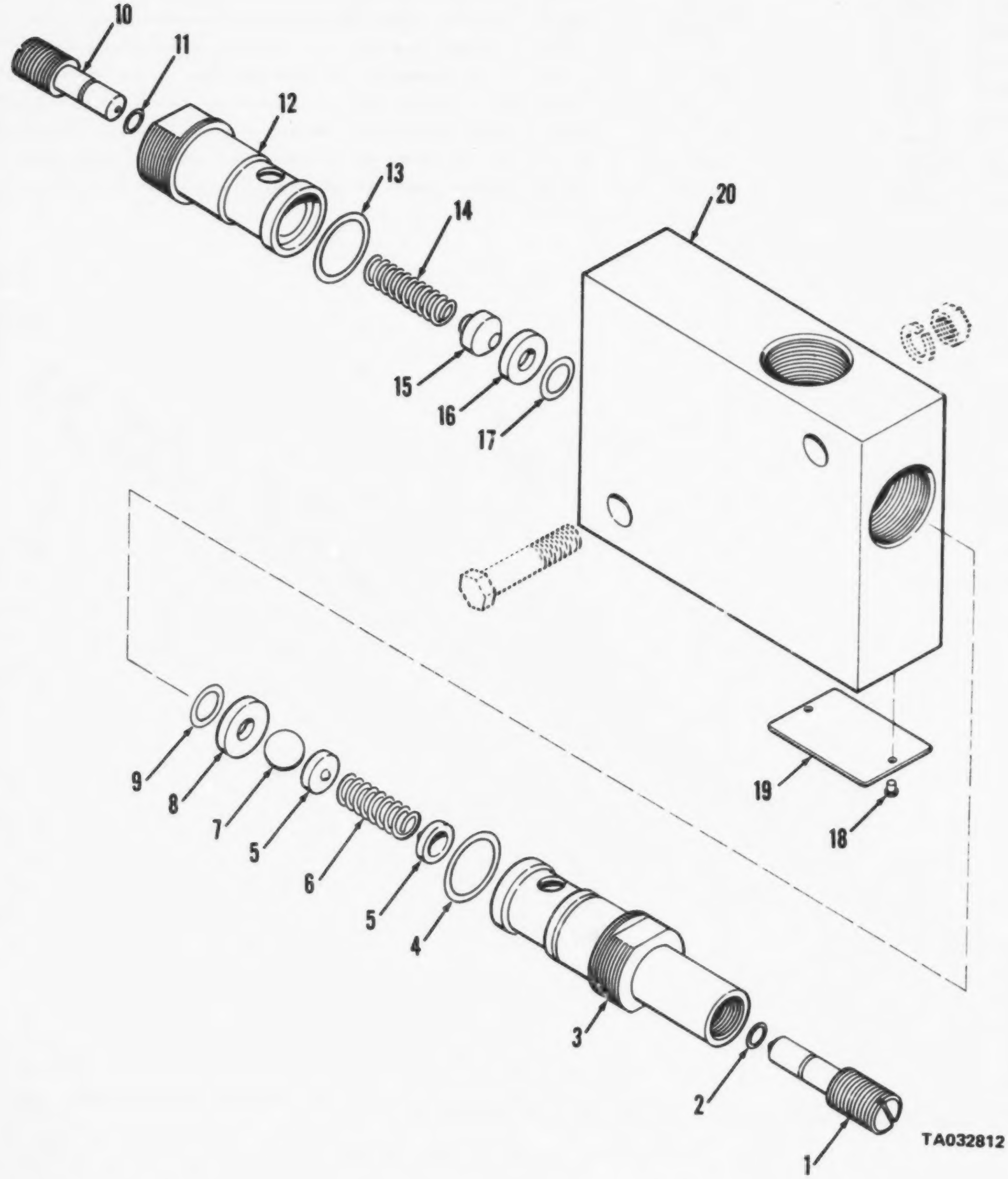

Figure 166. Valve assembly, check-relief

(1) ILLUSTRATION (a) FIG NO.	(b) ITEM NO.	(2) SMR CODE	(3) NATIONAL STOCK NUMBER	(4) PART NUMBER	(5) FSCM	(6) DESCRIPTION USABLE ON CODE	(7) U/M	(8) QTY INC IN UNIT
						FUNCTIONAL GROUP 55 STEERING,HYDRAULIC VALVES,HOSE AND TUBING ASSEMBLIES		
166		PAOFF	4820-00-458-8067	13216E9542	97403	.VALVE RELIEF CHECK, CARRIER HYD SYSTEM	EA	2
166		XAOZZ		50023	82271	..RELIEF VALVE REL & CHECK VALVE	EA	1
166	1	XAOZZ		50020	82271	..SCREW ADJUSTING RELIEF VALVE	EA	1
166	2	PAOZZ	5330-00-006-8380	A006	82271	..PACKING RELIEF VALVE	EA	1
166	3	XAOZZ		50019	82271	..BODY RELIEF VALVE HYD SYSTEM	EA	1
166	4	PAOZZ	4820-00-069-9129	A111	82271	..O-RING,VALVE REL VALVE BODY	EA	1
166	5	XAOZZ		50021	82271	..GUIDE SPRING REL VALVE	EA	2
166	6	XAOZZ		44104	82271	..SPRING HELICAL 800 TO 3000 PSI REL VALVE	EA	1
166	7	PAOZZ	3110-00-081-8742	MS19059-12	96906	..BALL BEARING 5-16 DIA REL VALVE	EA	1
166	8	XAOZZ		50022	82271	..SEAT BALL REL VALVE	EA	1
166	9	PAOZZ	4820-00-069-9107	A010	82271	..O-RING,VALVE REL VALVE SEAT	EA	1
166		XAOZZ		111557	82271	.CHECK VALVE HYD SYSTEM	EA	1
166	10	XAOZZ		50020	82271	..SCREW ADJUSTING CHECK VALVE	EA	1
166	11	PAOZZ	5330-00-006-8380	A006	82271	..PACKING CHECK VALVE	EA	1
166	12	XAOZZ		111560	82271	..BODY VALVE CHECK	EA	1
166	13	PAOZZ	4820-00-069-9129	A111	82271	..O-RING,VALVE CHECK VALVE	EA	1
166	14	XAOZZ		34115	82271	..SPRING HELICAL CHECK VALVE	EA	1
166	15	XAOZZ		111559	82271	..POPPET VALVE CHECK	EA	1
166	16	XAOZZ		50022	82271	..SEAT POPPET CHECK VALVE	EA	1
166	17	PAOZZ	4820-00-069-9107	A010	82271	.O-RING,VALVE CHECK VALVE	EA	1
166	18	XDOZZ		1131-0104	82271	.RIVET PLATE VALVE	EA	1
166	19	XBOZZ		15062	82271	.PLATE VALVE	EA	1
166	20	XAOZZ		111560	82271	.HOUSING VALVE RELIEF	EA	1

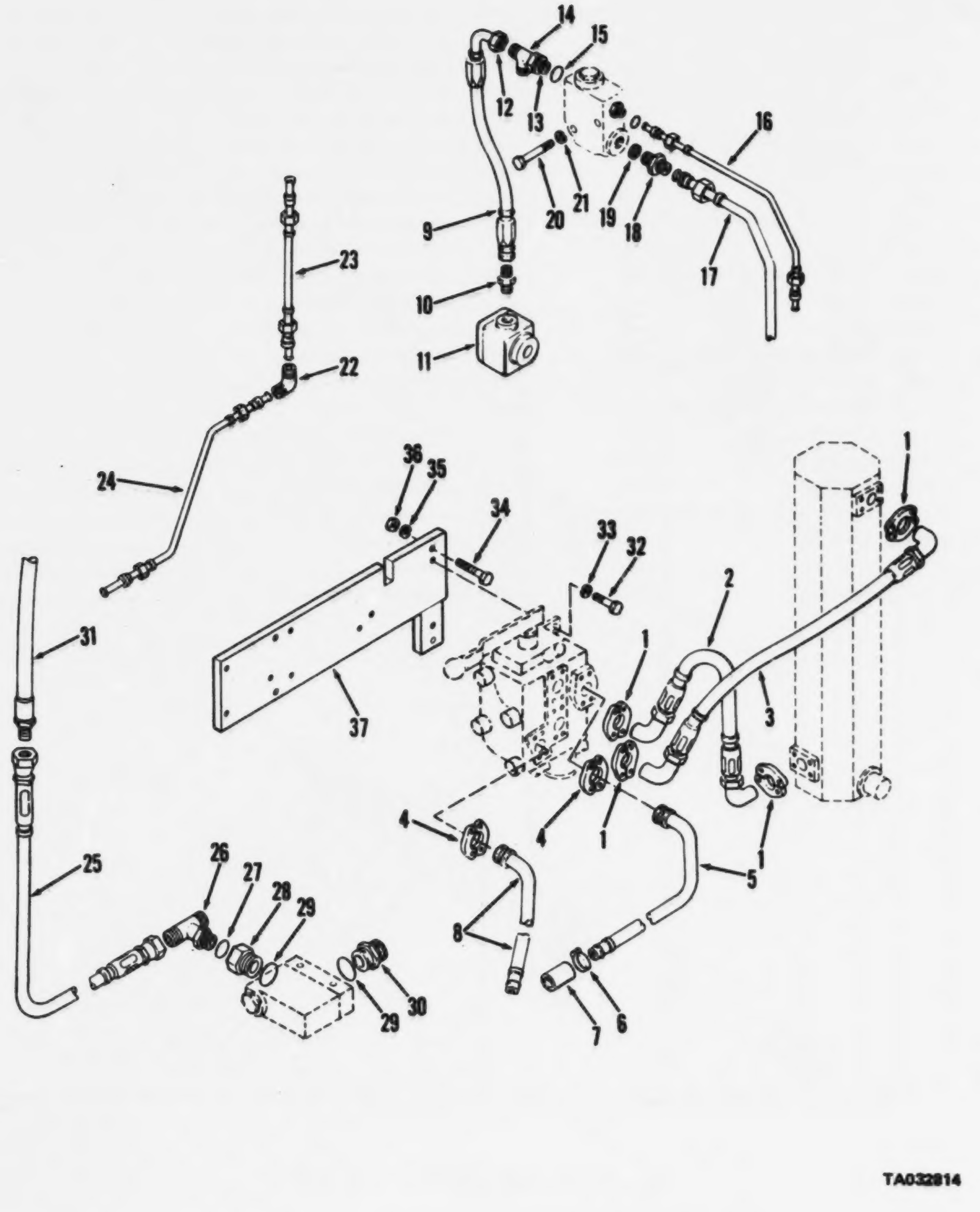

Figure 168. Hose and tube assemblies, dozer cylinder

(1) ILLUSTRATION (a) FIG NO.	(b) ITEM NO.	(2) SMR CODE	(3) NATIONAL STOCK NUMBER	(4) PART NUMBER	(5) FSCM	(6) DESCRIPTION USABLE ON CODE	(7) U/M	(8) QTY INC IN UNIT
						FUNCTIONAL GROUP 56 DOZER BLADE,HYDRAULIC CYLINDER,VALVES,HOSE AND TUBING ASSEMBLIES		
168	1	XBOZZ		MS35256-2CA	96906	.CONNECTOR,FLANGE TO CARRIER HYD SYSTEM	EA	8
168	2	MFOZZ		44025502	27315	.HOSE ASSY RBR CKT 157-DOZER CYLINDER TO.	EA	1
168		PAOZZ	9905-00-935-7777	MS39020-25	96906	..BAND,MARKER CKT 157	EA	4
168	3	MFOZZ		44025901	27315	.HOSE ASSY RBR CKT 158-DOZER CYLINDER TO.	EA	1
168		PAOZZ	9905-00-935-7777	MS39020-25	96906	..BAND,MARKER CKT 159	EA	4
168		PCOZZ		MS35263-20	96906	..HOSE RUBBER MFR FR 1-1-4DIA X DIM A	FT	V
168	4	XDOZZ		MS39256-16A	96906	.ELBOW,FLANGE TO CARRIER HYD SYSTEM	EA	1
168	5	PAOZZ	4710-01-025-7955	20Q48	27315	.TUBE ASSEMBLY,METAL CKT 159 DOZER CONT..	EA	1
168		XAFZZ		13213E9101	97403	..HEAD FLGD HYDRAULIC PIPE CONN	EA	1
168		PAOZZ	9905-00-935-7777	MS39020-25	96906	..BAND,MARKER CKT 159	EA	2
168		XAFZZ		1-20048	27315	..TUBE STEEL MFR FR 1-1-40D X .120WALL	FT	V
168	6	XBOZZ	4730-00-909-8627	MS35842-13	96906	.CLAMP TUBE HYDRAULIC TUBE CKT 159 SUPPORT	EA	2
168	7	PCOZZ		MS39305-12	96906	.HOSE SUCTION HYDRAULIC TUBE CKT 159 TO.	FT	1
168	8	MFOZZ		20U25	27315	.TUBE ASSY. STEEL CKT 118-DOZE CONT VALVE TO FLOW DIVIDER VALVE	EA	1
168		PAOZZ	9905-00-935-7777	MS35020-25	96906	..BAND,MARKER CKT 118	EA	2
168	9	MFOZZ		44028293	27315	.HOSE ASSY RBR FLOW DIVIDER VALVE	EA	1
168	–	XBOZZ	4730-00-451-2704	MS35292-12-128	96906	..ELBOW,TUBE TO HOSE HYDRAULIC HOSE CONN	EA	2
168		PAOZZ	9905-00-935-7777	MS39020-25	96906	..BAND,MARKER CKT 136	EA	2
168	10	XBOZZ	4730-00-194-1116	AN816-16	88044	.ADAPTER,STRAIGHT HYDRAULIC LINE CKT136 TOO RT ANGLE CHK VLV.	EA	1
168	11	PAOFF		C2-815546REF	48094	.VALVE CHECK RIGHT ANGLE	EA	1
168	12	XBOZZ	4730-00-287-0278	AN818-16	88044	.NUT,TUBE COUPLING HYDRAULIC LINE CKT136.	EA	1
168	13	XBOZZ	4730-00-628-4816	MS51534A16-12	96906	.REDUCER BODY,TUBE HYDRAULIC LINE CKT136.	EA	1
168	14	XBOZZ		44715000?	27315	.TEE TUBE HYDRAULIC LINES 118R136 TO FLOW.DVDR VLV 1-5-16-12.	EA	1
168	15	PAOZZ	5330-00-804-5694	MS28778-16	96906	.PACKING,PREFORMED TEE AND FLOW DVDR VLV	EA	2
168	16	MFOZZ		82CP47C	27315	.TUBE ASSEMBLY,METAL CKT 146-FLOW DIVIDER.VALVE TO MANIFOLD DRAIN	EA	1
168		PAOZZ	9905-00-935-3863	MS35020-28	96906	..BAND,MARKER CKT 146	EA	2
168	17	PBOZZ		820N79	27315	.TUBE ASSY STL CKT 118A-FLOW DIVIDER VLV.	EA	1
168		XAFZZ		AN818-16	81350	..NUT,TUBE,COUPLING HYDRAULIC PIPE CONN	EA	2
168		XAFZZ		MS20819-20	96906	..SLEEVE,FLARED,TUBE CPLNG NUT STP	EA	2
168		PAOZZ	9905-00-935-7777	MS39020-25	96906	..BAND,MARKER CKT 118A	EA	2
168	18	XBOZZ		440224029	27315	.ADAPTER TUBE HYDRAULIC LINE 118A AND FLOW DVDR VLV	EA	1
168	19	PAOZZ	5330-00-804-5694	MS28778-16	96906	.PACKING, PREFORMED	EA	1
168	20	XBOZZ	5305-00-269-3219	MS90725-69	96906	.SCREW CAP HEXAGON FLOW DVDR VLV MTG	EA	2
168	21	PAOZZ	5310-00-637-9541	MS35338-46	96906	.WASHER,LOCK FLOW DVDR VLV MTG HARDWARE	EA	2
168	22	XBOZZ	4730-00-278-3118	AN821-2C	88044	.ELBOW,TUBE HYDRAULIC LINE 118B	EA	2
168	23	PBOZZ		820P488D2	27315	.TUBE ASSY STL CKT 118B-FLOW DVDR VLL TO..ELIEF VLV	EA	1

(1) ILLUSTRATION (a) FIG NO.	(b) ITEM NO.	(2) SMR CODE	(3) NATIONAL STOCK NUMBER	(4) PART NUMBER	(5) FSCM	(6) DESCRIPTION USABLE ON CODE	(7) U/M	(8) QTY INC IN UNIT
168		XAOZZ		AN818-16	81350	..NUT,TUBE COUPLING HYDRAULIC PIPE CONN........................	EA	2
168		XAOZZ		MS20819-20	96906	..SLEEVE,FLARED,TUBE CPLNG NUT STP............................	EA	2
168		PAOZZ	9905-00-935-7777	MS39020-29	96906	..BAND,MARKER CKT 118B..	EA	2
168	24	PBOZZ		820P44801	27315	.TUBE ASSEMBLY,METAL CKT 118C FLOW DVDR...V TO RELIEF VLV. 11/4 ODX.120WALL..	EA	1
168		XAOZZ		AN818-16	81350	..NUT,TUBE.COUPLING HYDRAULIC PIPE CONN.......................	EA	2
168		XAOZZ		MS20819-20	96906	..SLEEVE,FLARED,TUBE CPLNG NUT STP............................	EA	2
168	24	PAOZZ	9905-00-935-7777	MS39020-29	96906	.BAND MARKER CKT 118C...	EA	2
168	25	MFOZZ		44Q27001	27315	.HOSE ASSEMBLY HYDRAULIC HOSE CONN............................	EA	1
168		PAOZZ	9905-00-935-7777	MS39020-29	96906	..BAND,MARKER CKT 118D..	EA	4
168	26	XBOZZ	4730-01-027-9641	44Z1501011	27315	.TEE,TUBE TO BOSS HYDRAULIC LINES 118C-118D AND RELIEF VLV...	EA	1
168	27	PAOZZ	5330-00-816-3546	MS28778-20	96906	.PACKING PRFMD TEE AND BSHNG..................................	EA	1
168	28	XBOZZ		AN894-22	88044	.BUSHING TEE AND RELIEF VLV...................................	EA	1
168	29	PAOZZ	5330-00-285-9842	MS28778-10	96906	.PACKING PRFMD BSHNG AND RELIEF VLV...........................	EA	2
168	30	XBOZZ	4730-00-813-9611	MS51500A8	96906	.ADAPTER,STRAIGHT RELIEF VLV AND MANIFOLD,DRAIN...............	EA	1
168	31	PBOZZ	4710-01-028-5561	20U24	27315	.TUBE ASSEMBLY,METAL CKT 118E HYDRAULIC...AL PUMP TO RELIEF VALVE...	EA	1
168		XAFZZ		13205E3922-2	97403	..CONNECTOR,PIPE:37 HYDRAULIC PIPE CONN.......................	EA	1
168		XAFZZ		13213E5101	97403	..HEAD FLGD HYDRAULIC PIPE CONN...............................	EA	1
168		PAOZZ	9905-00-935-7777	MS39020-29	96906	..BAND,MARKER CKT 118F..	EA	1
168	32	XDOZZ	5305-00-069-5576	MS90725-52	96906	.SCREW CAP HEXAGON DOZER CONT VLV MTG.........................	EA	1
168	33	PAOZZ	5310-00-209-0965	MS35338-47	96906	.WASHER,LOCK DOZER CONT VLV MTG HARDWARE......................	EA	1
168	34	XBOZZ	5305-00-050-1077	MS90725-118	96906	.SCREW CAP HX HD VLV MTG PLT MTG HARDWARE.....................	EA	4
168	35	PAOZZ	5310-00-594-5272	MS35338-48	96906	.WASHER LOCK VLV MTG PLT MTG HARDWARE	EA	4
168	36	XBOZZ	5310-00-768-0318	MS51967-14	96906	.NUT,PLAIN,HEXAGON VLV MTG PLT MTG............................	EA	4
168	37	XDOZZ		818P191	27315	PLATE VLV MTG SEL CONT VLV-DIRECTIONAL CONT VLV-DOZER CONT .PLATE VLO MTG SEL CONT VLV-DIRECTIONAL.......................	EA	1

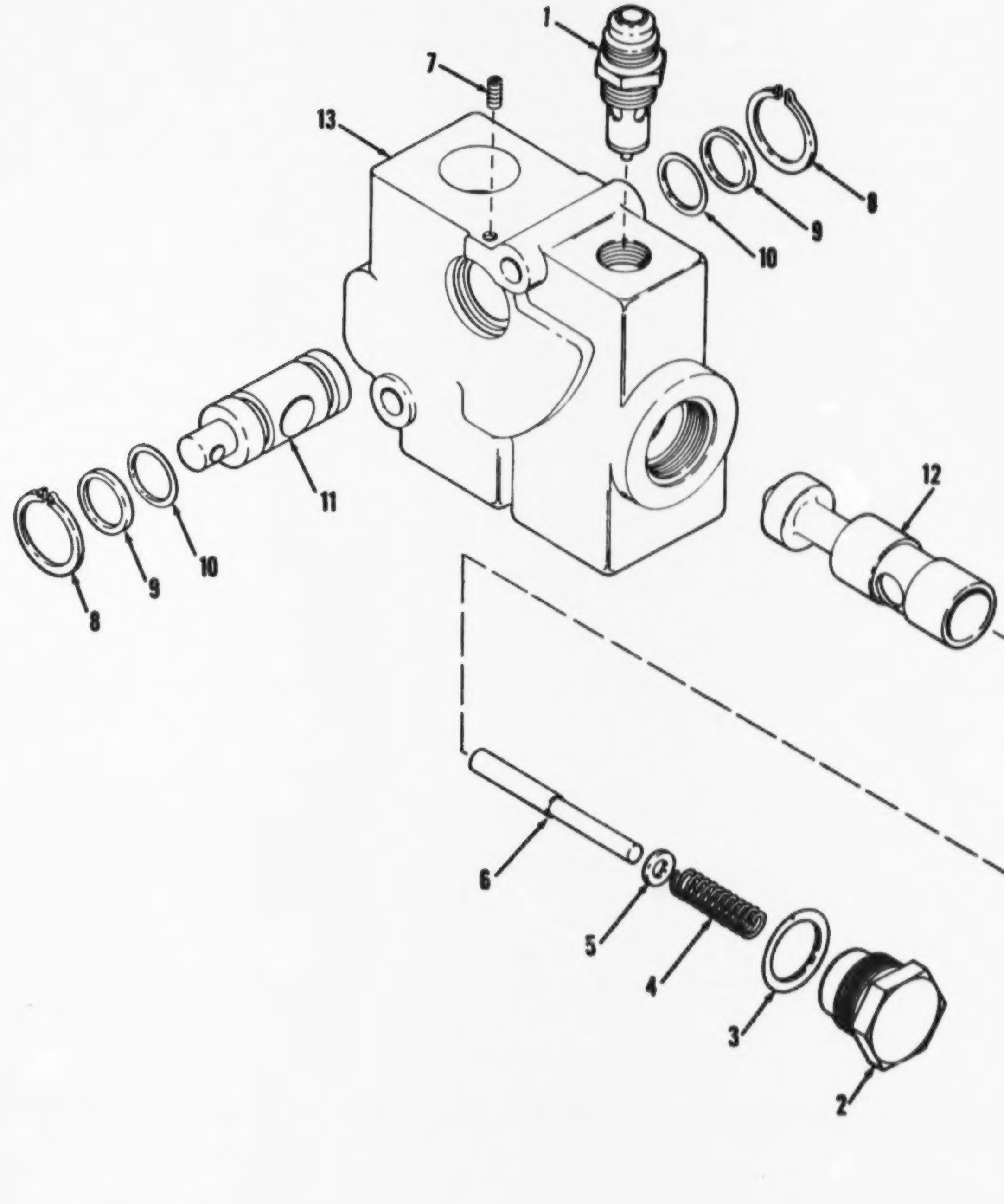

Figure 169. Valve assembly, flow divider

(1) ILLUSTRATION (a) FIG NO.	(b) ITEM NO.	(2) SMR CODE	(3) NATIONAL STOCK NUMBER	(4) PART NUMBER	(5) FSCM	(6) DESCRIPTION USABLE ON CODE	(7) U/M	(8) QTY INC IN UNIT
						FUNCTIONAL GROUP 56 DOZER BLADE, HYDRAULIC CYLINDER, VALVES, HOSE AND TUBING ASSEMBLIES		
169		PAOFZ	4820-00-455-8298	13216E7855	97403	VALVE LINEAR DIRECT HYD SYSTEM..............................	EA	1
169	1	PAOZZ	4820-00-455-8298	81202-013	99185	.VALVE RELIEF DIVIDER VALVE..............................	EA	1
169	2	XBOZZ	4820-01-044-5165	235B0F7	99185	..VALVE,PLUG FLOW DIVIDER..............................	EA	1
169	3	PAOZZ	5330-01-020-8984	250A003-514	99185	..PACKING PREFORMED PLUG..............................	EA	1
169	4	XBOZZ		230A055	99185	..SPRING HELICAL DIVIDER VALVE..............................	EA	1
169	5	XBOZZ	5310-01-029-6269	266A500-0C7	99185	..WASHER,SPRING DIVIDER VALVE..............................	EA	1
169	6	XDOZZ		215A010	99185	..ROD VALVE DIVIDER..............................	EA	1
169	7	XDOZZ	5305-01-C46-0445	267A517-0C2	99185	..SETSCREW,SOCKET DIVIDER VALVE..............................	EA	1
169	8	XDOZZ		265A009-C93	99185	..RING RETAINING VALVE..............................	EA	2
169	9	XDOZZ		250B022-116	99185	..RING BACKUP DIVIDER VALVE..............................	EA	2
169	10	PAOZZ		250A0C1-116	99185	..PACKING PREFORMED VALVE..............................	EA	2
169	11	PAOZZ		285B161	99185	..VALVE CONTROL DIVIDER VALVE..............................	EA	1
169	12	XAOZZ		220C056	99185	..PISTON VALVE FLOW DIVIDER..............................	EA	1
169	13	XAOZZ		20CR152-0C1	99185	..BODY VALVE FLOW DIVIDER..............................	EA	1

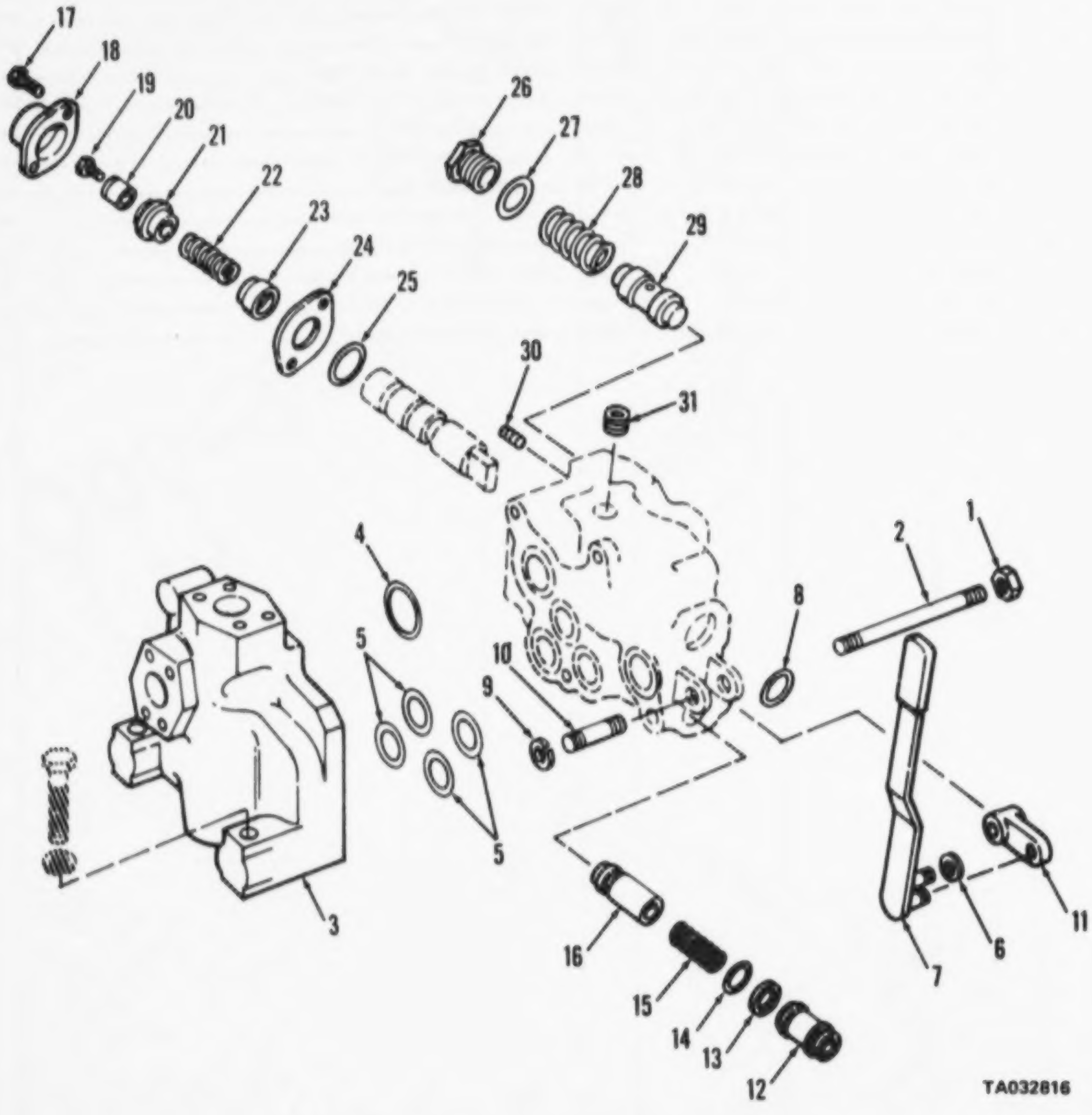

Figure 170. Valve, dozer control

(1) ILLUSTRATION (a) FIG NO.	(b) ITEM NO.	(2) SMR CODE	(3) NATIONAL STOCK NUMBER	(4) PART NUMBER	(5) FSCM	(6) DESCRIPTION USABLE ON CODE	(7) U/M	(8) QTY INC IN UNIT
						FUNCTIONAL GROUP 56 DOZER BLADE,HYDRAULIC CYLINDER,VALVES,HOSE AND TUBING ASSEMBLIES		
170		PAOFF	4820-00-458-8068	13213E9754	97403	.VALVE LINEAR DIRECT..	EA	1

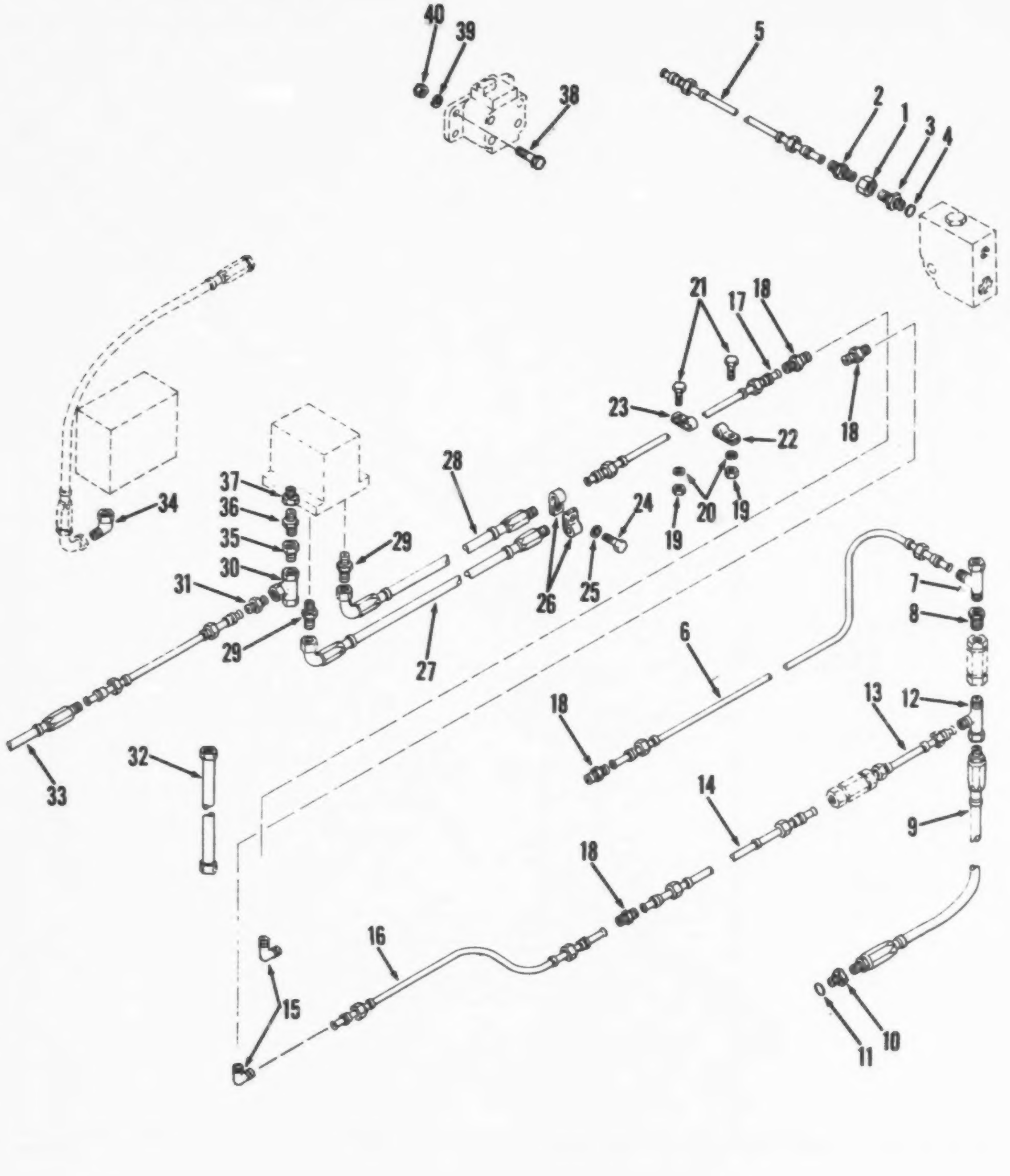

Figure 171. Hose and tube assemblies, flow control

(1) ILLUSTRATION (a) FIG NO.	(b) ITEM NO.	(2) SMR CODE	(3) NATIONAL STOCK NUMBER	(4) PART NUMBER	(5) FSCM	(6) DESCRIPTION USABLE ON CODE	(7) U/M	(8) QTY INC IN UNIT
						FUNCTIONAL GROUP 56 DOZER BLADE,HYDRAULIC CYLINDER,VALVES,HOSE AND TUBING ASSEMBLIES		
171	1	XDOZZ		841FS12	30327	.FITTING NUT HYDRAULIC LINE CKT155A	EA	2
171	2	XDOZZ		883FS12X08	30327	.REDUCER,TUBE: TUBE TO VALVE................................	EA	2
171	3	XBOZZ		MS39324-22	96906	.ADAPTER HYDRAULIC LINE CKT155A............................	EA	1
171	4	PAOZZ	5330-00-804-5694	MS29778-16	96906	.PACKING,PREFORMED ADPTR AND FLOW CONT......................	EA	1
171	5	MFOZZ		820N59	27315	.TUBE ASSEMBLY,METAL CKT 155A FLOW DVDR.....................	EA	1
171		PAOZZ	9905-00-935-3863	MS35020-28	96906	..BAND,MARKER CKT 155A......................................	EA	2
171	6	MFOZZ		820P454	27315	.TUBE ASSEMBLY,METAL CKT 155C CHK VLV	EA	1
171		PAOZZ	9905-00-935-3863	MS35020-28	96906	..BAND,MARKER CKT 155C......................................	EA	2
171	7	XBOZZ	4730-00-074-0713	MS51523A8	96906	.TEE,TUBE HYDRAULIC LINE CKT 155A...........................	EA	1
171		XBOZZ	4730-00-222-8456	132C5E3937-2	97403	.ADAPTER,STRAIGHT HYDRAULIC LINE CKT 155A,AND TEE...........	EA	1
171	9	MFOZZ		44027503	27315	.HOSE ASSY RBR CKT 143A STEERING CONT VLV,TO CHK VLV........	EA	1
171		PAOZZ	9905-00-935-7777	MS35020-25	96906	..BAND,MARKER CKT 143A......................................	EA	2
171	10	XBOZZ	4730-00-173-1881	MS39324-12-16	96906	.ADAPTER,STRAIGHT HYDRAULIC LINE CKT 143A,AND STEERING CONT VLV..	EA	1
171	11	PAOZZ	5330-00-804-5695	MS28778-6	96906	.PACKING PREMD ADPTR AND STEERING CONT VLV..................	EA	2
171	12	XDOZZ	4730-00-074-0713	MS51523A8	96906	.TEE,TUBE CHK VLV AND HYDRAULIC LINES CKT 143A-153B.........	EA	1
171	13	MFOZZ		820P453D2	27315	.TUBE ASSY STL CKT 154B CHK VLV TO CHK VLV..................	EA	1
171		PAOZZ	9905-00-935-3863	MS35020-28	96906	..BAND,MARKER CKT 154B......................................	EA	2
171	14	MFOZZ		820P453D1	27315	.TUBE ASSY STL CKT 154D CHK VLV TO CHK VLV..................	EA	1
171		PAOZZ	9905-00-935-3863	MS39020-28	96906	..BAND,MARKER CKT 154D......................................	EA	2
171	15	XBOZZ		44047013	27315	.ELBOW 90DEG HYDRAULIC LINES CKT 154D-154E..................	EA	2
171	16	MFOZZ		820N48	27315	.TUBE ASSEMBLY,METAL CKT 154E CHK VLV	EA	1
171	17	MFOZZ		820P460	27315	.TUBE ASSEMBLY,METAL CKT 155E-CHK VLV.......................	EA	1
171	18	PAOZZ	4730-00-359-4731	8-37-4	92985	.FITTING UNION HYDRAULIC LINES CKT..........................	EA	1
171	19	XBOZZ	5310-00-982-4937	MS27040-8	96906	.NUT SQ 10-24 CLAMP MTG HARDWARE............................	EA	3
171	20	PAOZZ	5310-00-045-3296	MS35338-43	96906	.WASHER,LOCK CLAMP MTG HARDWARE NO.10.......................	EA	3
171	21	XBOZZ	5305-00-984-6216	MS35206-269	96906	.SCREW,MACHINE CLAMP MTG HARDWARE...........................	EA	3
171	22	XBOZZ	5340-00-057-2904	MS21333-71	96906	.CLAMP HYDRAULIC LINES CKT 154F-155E........................	EA	2
171	23	XBOZZ	5340-00-984-8540	MS21333-102	96906	.CLAMP HYDRAULIC LINE CKT 154F-155F.........................	EA	1
171	24	XBOZZ		MS90725-3	96906	.SCREW,CAP,HEX HD: 1/4-20 X 1/2,CLAMP MTG...................	EA	1
171	25	PAOZZ	5310-00-582-5965	MS35338-44	96906	.WASHER,LOCK CLAMP MTG HARDWARE 1-4.........................	EA	1
171	26	XBOZZ	5340-00-984-8540	MS21333-102	96906	.CLAMP HYDRAULIC LINES CKT 154F-155E........................	EA	2
171	27	MFOOO		44028697	27315	.HOSE ASSY RBR CKT 155F-CHK VLV TO CHK VLV..................	EA	1
171		PAOZZ	9905-00-935-7777	MS35020-25	96906	..BAND,MARKER CKT 155F......................................	EA	1
171	28	MFOOO		44028606	27315	.HOSE ASSY RBR CKT 154G CHK VLV TO CHK VLV..................	EA	1
171		XBOZZ	4730-01-025-0916	13215E7647-1	97403	..ADAPTER,STRAIGHT HYDRAULIC HOSE CONN......................	EA	1
171		XBOZZ	4730-00-451-4620	MS39292-8-88	96906	..ELBOW,TUBE TO HOSE HYDRAULIC HOSE CONN....................	EA	1

(1) ILLUSTRATION (a) FIG NO.	(b) ITEM NO.	(2) SMR CODE	(3) NATIONAL STOCK NUMBER	(4) PART NUMBER	(5) FSCM	(6) DESCRIPTION USABLE ON CODE	(7) U/M	(8) QTY INC IN UNIT
171		PAOZZ	9905-00-935-7777	MS39020-29	96906	..BAND,MARKER CKT 154G	EA	2
171	29	XBOZZ		AN816-11	88044	.NIPPLE HYDRAULIC LINE CKT 155F AND CHK	EA	1
171	30	XDOZZ	4730-01-053-9707	44Q21706	27315	.TEE,TUBE HYDRAULIC LINES CKT 125A-154G	EA	1
171	31	XBOZZ	4730-00-194-1115	AN816-12	88044	.ADAPTER STRAIGHT PI TEE AND CHK VLV	EA	1
171	32	MFOZZ		44Q27304	27315	.HOSE ASSY RBR CKT 135D-CHK	EA	1
171		PAOZZ	9905-00-935-7777	MS39020-29	96906	..BAND,MARKER CKT 135D	EA	2
171	33	MFOZZ		44Q27501	27315	.HOSE ASSY RBR CKT 125 CHK	EA	1
171		XBOZZ	4730-00-451-2703	MS39290-8-88	96906	..COUPLING HOSE HYDRAULIC HOSE CONN.	EA	1
171		XBOZZ	4730-00-451-4620	MS39292-8-88	96906	..ELBOW,TUBE TO HOSE HYDRAULIC HOSE CONN.	EA	1
171		PAOZZ	9905-00-935-7777	MS39020-29	96906	..BAND,MARKER CKT 125	EA	2
171	34	XDOZZ		849FSC08XC8	30327	.FITTING ELBOW HYDRAULIC LINE CKT 125	EA	1
171	35	XBOZZ	4730-00-288-9947	MS5150388	96906	.ADAPTER,STRAIGHT HYDRAULIC LINE CKT 135C.AND CHK VLV	EA	1
171	36	XDOZZ		44Q24103	27315	.NIPPLE,PIPE HYDRAULIC LINE CKT 135D AND.	EA	1
171	37	XDOZZ		44Q224D12	27315	.ADAPTER,STRAIGHT CHK VLV AND HYDRAULIC..	EA	4
171	38	XBOZZ	5305-00-942-2196	MS18154-60	96906	.SCREW,CAP,HEXAGON TUBE ADPTR MTG HARDWARE 3-8-16X1	EA	4
171	39	PAOZZ	5310-00-637-9541	MS35338-46	96906	.WASHER,LOCK TUBE ADPTR MTG HARDWARE 3-8	EA	4
171	40	PAOZZ	5310-00-761-0654	MS51967-9	96906	.NUT,PLAIN,HEX 3/8-16	EA	4

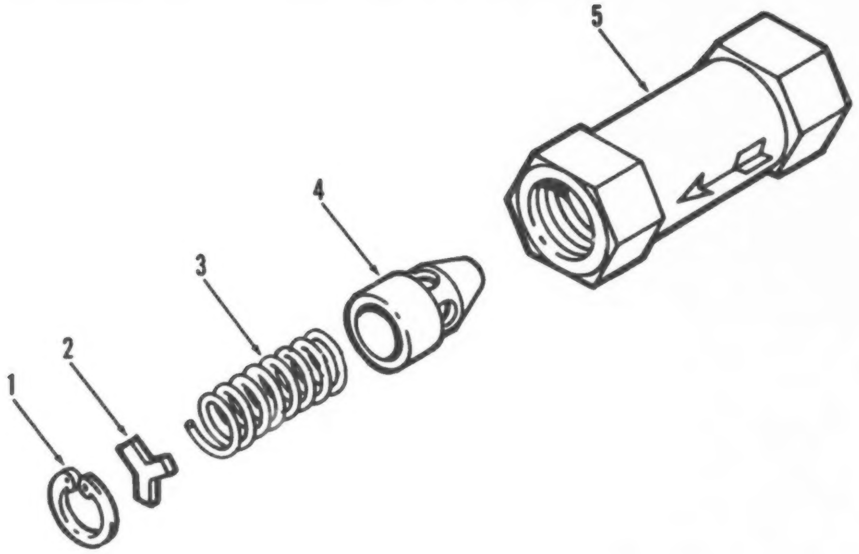

TA032818

Figure 172. Valve, check

(1) ILLUSTRATION (a) FIG NO.	(b) ITEM NO.	(2) SMR CODE	(3) NATIONAL STOCK NUMBER	(4) PART NUMBER	(5) FSCM	(6) DESCRIPTION USABLE ON CODE	(7) U/M	(8) QTY INC IN UNIT
						FUNCTIONAL GROUP 56 DOZER BLADE,HYDRAULIC CYLINDER,VALVES,HOSE AND TUBING ASSEMBLIES		
172		PADZZ	4820-00-494-6555	0T8P1-06-30-1051 98	62983	.VALVE CHECK HYDRAULIC LINES CKT 1548-1540..................	EA	2
172	1	XADZZ		987C2	62983	..RING RETAINING VALVE....................................	EA	1
172	2	XADZZ		125673	62983	..WASHER,HYDRAULIC CO VALVE..............................	EA	1
172	3	XADZZ		216598	62983	..SPRING HELIPTICAL VALVE................................	EA	1
172	4	XADZZ		125674	62983	..POPPET SPRING VALVE....................................	EA	1
172	5	XADZZ		352167	62983	..BODY VALVE CHECK.......................................	EA	1

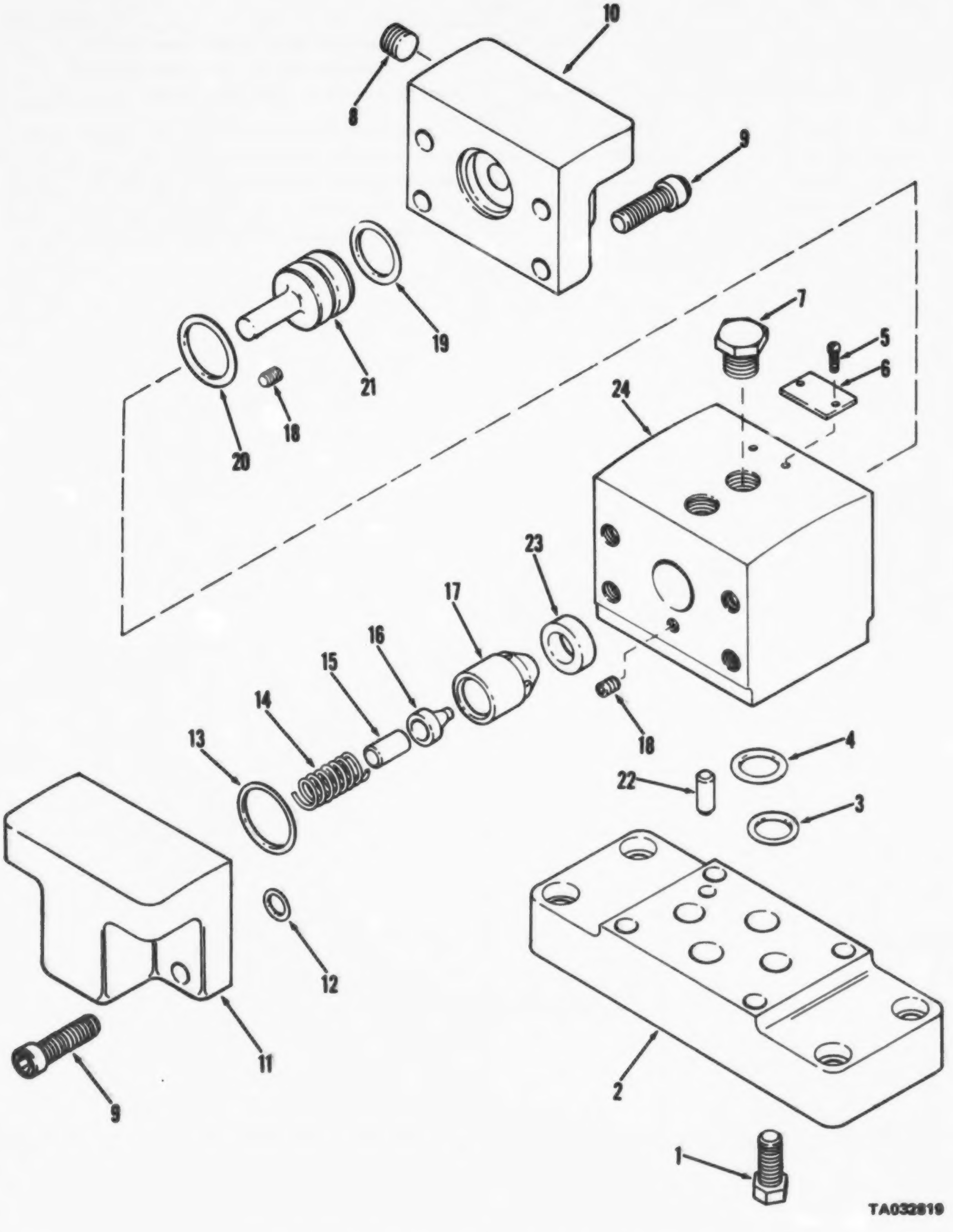

Figure 173. Valve assembly, check; pilot operated

(1) ILLUSTRATION (a) FIG NO.	(b) ITEM NO.	(2) SMR CODE	(3) NATIONAL STOCK NUMBER	(4) PART NUMBER	(5) FSCM	(6) DESCRIPTION USABLE ON CODE	(7) U/M	(8) QTY INC IN UNIT
						FUNCTIONAL GROUP 56 DOZER BLADE,HYDRAULIC		
						CYLINDER,VALVES,HOSE AND TUBING ASSEMBLIES		
173		PAOZZ	4820-00-176-9688	13205E3292	97403	.VALVE CHECK	EA	1
173	1	XBOZZ	5305-01-029-6830	3X298138	62983	..SCREW,PLATE VALVE	EA	4
173	2	XDOZZ		RXGM03-10553	62983	..PLATE MOUNTING PILOT OP CHECK VALVE	EA	1
173		XDOZZ		4CG03-1051	62983	..VALVE ASSEMBLY PILOT OPERATED	EA	1
173	3	KFOZZ		154005	62983	...PACKING PREFORMED PLATE PART OF KIT P/N 919670	EA	1
173	4	KFOZZ		154012	62983	...PACKING PREFORMED MTG PLATE PART OF KITP/N 919670	EA	2
173	5	XDOZZ	5305-00-537-0823	36212	62983	...SCREW,RETAINER PLAT IDENT PLATE	EA	2
173	6	XBOZZ		162741	62983	...PLATE VALVE	EA	1
173	7	XDOZZ	4730-00-555-8997	136568	62983	...PLUG PIPE VALVE	EA	2
173	8	PAOZ	3930-00-195-0571	7C75	62983	...PLUG,HYDRAULIC PUMP VALVE	EA	1
173	9	XDOZZ		298126	62983	...SCREW SUNK HEAD VALVE COVER	EA	8
173	10	XAOZZ		342229	62983	...COVER VALVE PILOT OPERATED	EA	1
173	11	XAOZZ		342228	62983	...COVER VALVE PILOT OPERATED	EA	1
173	12	KFOZZ		154005	62983	...PACKING PREFORMED COVER	EA	1
173	13	KFOZZ		179347	62983	...PACKING PREFORMED VALVE COVER PART OF P/N 919670	EA	1
173	14	XBOZZ		388350	62983	...SPRING HELICAL VALVE	EA	1
173	15	XBOZZ		359858	62983	...GUIDE SPRING VALVE	EA	1
173	16	XAOZZ		359861	62983	...POPPET VALVE PILOT OPERATED	EA	1
173	17	XDOZZ		359861	62983	...VALVE,CHECK PILOT OPERATED	EA	1
173	18	KFOZZ		168367	62983	...PLUG BODY VALVE PART OF KIT P/N 919670	EA	2
173	19	KFOZZ		154141	62983	...PACKING PREFORMED COVER PART OF KIT P/N 919670	EA	1
173	20	KFOZZ		166360	62983	...PACKING PREFORMED PISTON PART OF KIT... 919670	EA	1
173	21	XAOZZ		342226	62983	...PISTON VALVE PILOT OPERATED	EA	1
173	22	XDOZZ		160571	62983	...PIN SPRING BODY	EA	1
173	23	XAOZZ		342233	62983	...BODY ASSEMBLY VALVE	EA	1
173	24	XAOZZ		342224	62983	...SEAT VALVE CHECK	EA	1
173	25	XAOZZ		342232	62983	...BODY VALVE PILOT OPERATED	EA	1
173		PAOZZ		919670	62983	.SEAL KIT PILOT OPER VALVE	EA	1
173	3					PACKING PREFORMED	EA	1
173	4					PACKING PREFORMED	EA	2
173	13					PACKING PREFORMED	EA	1
173	18					PLUG BODY	EA	2
173	19					PACKING PREFORMED	EA	1
173	20					PACKING PREFORMED	EA	1

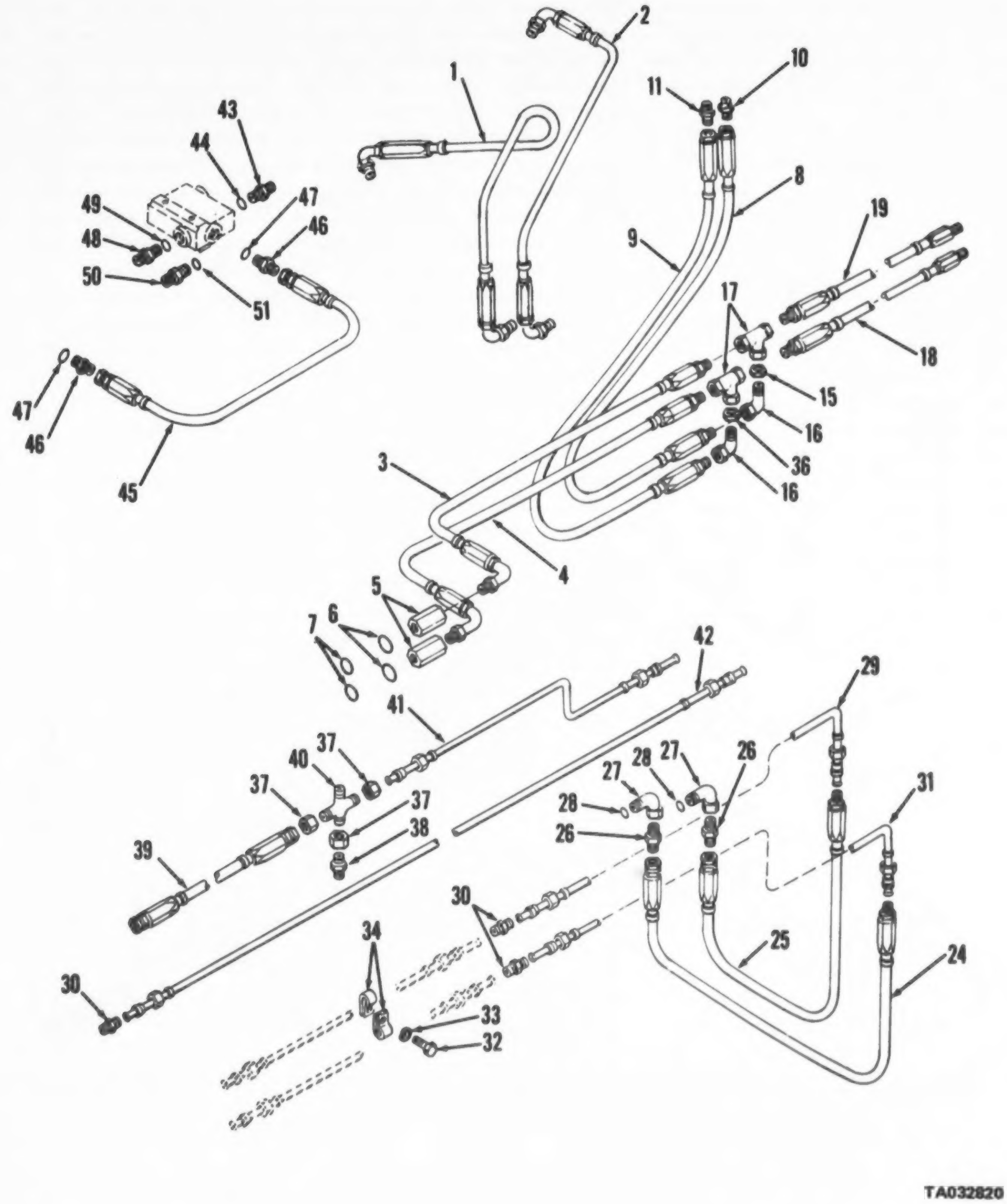

Figure 174. Hose and tube assemblies, steering (Sheet 1 of 2)

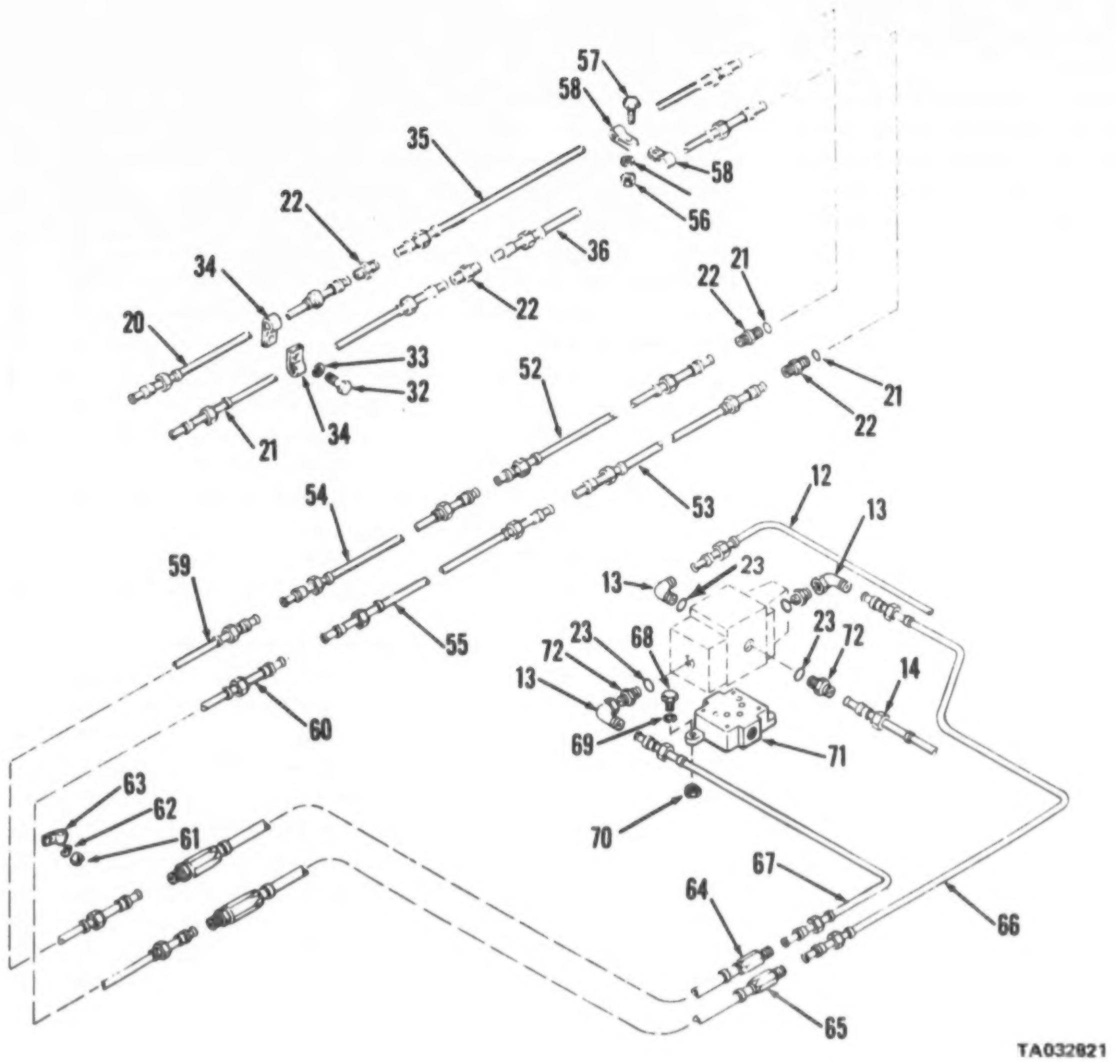

Figure 174. Hose and tube assemblies, steering (Sheet 2 of 2)

(1) ILLUSTRATION (a) FIG NO.	(b) ITEM NO.	(2) SMR CODE	(3) NATIONAL STOCK NUMBER	(4) PART NUMBER	(5) FSCM	(6) DESCRIPTION USABLE ON CODE	(7) U/M	(8) QTY INC IN UNIT
						FUNCTIONAL GROUP 57 COMPONENTS,HYDRAULIC,		
						STEERING SYSTEM		
174	1	MFOZZ		44028606	27315	.HOSE ASSY RBR CKT 132 STRG CYL TO CV........................	EA	1
174		PAOZZ	9905-00-935-7777	MS39020-29	96906	..BAND,MARKER CKT 132..	EA	2
174	2	MFOZZ		44027308	27315	.HOSE ASSY RBR CKT 133 STRG CYL TO MANF...AIN...............	EA	1
174		XBOZZ	4730-00-451-2703	MS39290-8-8B	96906	..COUPLING HOSE HYDR HOSE CONN...............................	EA	2
174		PAOZZ	9905-00-935-7777	MS39020-25	96906	..BAND,MARKER CKT 133..	EA	2
174	3	MFOZZ		44027307	27315	.HOSE ASSY RBR CKT 160C CV TO STR FLTR.......................	EA	1
174		PAOZZ	9905-00-935-7777	MS39020-25	96906	..BAND,MARKER CKT 160C.......................................	EA	2
174	4	MFOZZ		44027506	27315	.HOSE ASSY RBR CKT 161C CV TO STR FLTR.......................	EA	1
174		PAOZZ	9905-00-935-7777	MS39020-25	96906	..BAND,MARKER CKT 161C.......................................	EA	2
174	5	PAOZZ	4820-00-914-4692	132C8E6785	97403	.VALVE,CHECK...	EA	2
174	6	PAOZZ	5330-00-808-0794	MS28778-8	96906	.PACKING,PREFORMED HYD SYSTEM................................	EA	7
174	7	PAOZZ	2520-00-401-7136	21642	10989	.FILTER STR HYDR LINES CKT 160C-161CMONTE.CALIF..............	EA	2
174	8	MFOZZ		44027307	27315	.HOSE ASSY RBR CKT 161B STRG CONT V TO HD.AND PLT OPR V......	EA	1
174		PAOZZ	9905-00-935-7777	MS39020-29	96906	..BAND,MARKER CKT 161B.......................................	EA	2
174	9	MFOZZ		44027306	27315	.HOSE ASSY RBR CKT 160B STRG CONT V TO HD.AND PLT OPR V......	EA	1
174		PAOZZ	9905-00-935-7777	MS39020-25	96906	..BAND,MARKER CKT 160B.......................................	EA	2
174	10	XBOZZ		MS39324-16	96906	.ADAPTER,TUBE	EA	3
174	11	PAOZZ	4730-00-359-4731	8-37-4	92985	.FITTING UNION HYDR LINE CKT 1609 TO 161D.AND 161B TO 160D...	EA	2
174	12	MFOZZ		820N52	27315	.TUBE ASSEMBLY,METAL CKT 161D STRG CONT V.TO HD AND PLT OPR V	EA	1
174		PAOZZ	9905-00-935-3863	MS39020-28	96906	..BAND,MARKER CKT 161D.......................................	EA	2
174	13	XDOZZ		849FSC08XC8	30327	.FITTING 90DEG HYDR LINE CKT 161D AND HD.... PLT OPR V.......	EA	1
174	14	MFOZZ		82CP464	27315	.TUBE ASSEMBLY,METAL CKT 160D STRG CONT V.TO HD AND PLT OPR V	EA	1
174		PAOZZ	9905-00-935-3863	MS39020-28	96906	..BAND,MARKER CKT 160D.......................................	EA	2
174	15	PAOZZ	4730-00-125-7921	C7924X8	79470	.LOCKNUT,TUBE FTG AND TEE....................................	EA	2
174	16	XDOZZ		825BHF5C8	30327	.ELBOW TUBE HYDR LINES CKT 160B-161B AND..EES................	EA	2
174	17	XBOZZ	4730-00-125-2685	C5707X8	79470	.TEE,TUBE HYD SYSTEM...	EA	2
174	18	MFOZZ		44027504	27315	.HOSE ASSY RBR CKT 161A STRG CONT V TO HD. AND PLT OPR V.....	EA	1
174		PAOZZ	9905-00-935-7777	MS39020-29	96906	..BAND,MARKER CKT 161A.......................................	EA	2
174	19	MFOZZ		44027505	27315	.HOSE ASSY RBR CKT 160A STRG CONT V TO STR FLTR..............	EA	1
174		PAOZZ	9905-00-935-7777	MS39020-25	96906	..BAND,MARKER CKT 160A.......................................	EA	2
174	20	MFOZZ		44028804	27315	.HOSE ASSY RBR CKT 141F STRG CYL TO HD AND PLT OPR V.........	EA	1
174		PAOZZ	9905-00-935-7777	MS39020-25	96906	..BAND,MARKER CKT 141F.......................................	EA	2
174	21	MFOZZ		44028803	27315	.HOSE ASSY RBR CKT 142F STRG CYL TO HD AND PLT OPR V.........	EA	1
174		PAOZZ	9905-00-935-7777	MS39020-25	96906	..BAND,MARKER CKT 142F.......................................	EA	2
174	22	XDOZZ		44021506	27315	.RAIGHT,TUBE TO TUBE STRG CYL AND HYDR...... CKT 141F-142F...	EA	2
174	23	PAOZZ	5330-00-808-0794	MS28778-8	96906	.PACKING,PREFORMED...	EA	7
174	24	MFOZZ		44028801	27315	.HOSE ASSY RBR CKT 135C STRG CYL TO MANF.....................	EA	1
174		PAOZZ	9905-00-935-7777	MS39020-25	96906	..BAND,MARKER CKT 135C.......................................	EA	2

(1) ILLUSTRATION (a) FIG NO.	(b) ITEM NO.	(2) SMR CODE	(3) NATIONAL STOCK NUMBER	(4) PART NUMBER	(5) FSCM	(6) DESCRIPTION USABLE ON CODE	(7) U/M	(8) QTY INC IN UNIT
174	25	MFOZZ		44028602	27315	.HOSE ASSY RBR CKT 137C STRG CYL TO FL..................	EA	1
174		PAOZZ	9905-00-935-7777	MS39020-29	96906	..BAND MARKER CKT 137C...	EA	2
174	26	XBOZZ	4730-00-173-1881	MS39224-12-16	96906	.ADAPTER,STRAIGHT HYDR PIPING AND STRG...·· HYDR PMP-AND HD AND PLT OPR V..	EA	5
174	27	XBOZZ	4730-00-812-2424	MS51521A8	96906	.ELBOW,TUBE,90 HYDR PIPING AND STRG ASSY-.YDR PMP AND HD AND PLT OPR V..	EA	5
174	28	XBOZZ		MS28778-8	96906	.PACKING,PREFORMED: TUBE..	EA	5
174	29	MFOZZ		820N37	27315	.TUBE ASSEMBLY,METEL CKT 137B STRG CYL TO.FL CONT RV, 1/2"ODX.049WALLX49.75LG..	EA	1
174		PAOZZ	9905-00-935-3863	MS35020-28	96906	..BAND,MARKER CKT 137B...	EA	2
174	30	PAOZZ	4730-00-359-4731	8-37-4	92985	.FITTING UNION HYDR PIPING......................................	EA	6
174	31	MFOZZ		820N36	27315	.TUBE ASSEMBLY,STEEL CKT 135B STRG CYL TO.CV, 1/2"ODX.049WALLX58.00LG..	EA	1
174		PAOZZ	9905-00-935-3863	MS35020-28	96906	..BAND,MARKER CKT 135B...	EA	2
174	32	XBOZZ		MS35206-263	96906	.SCREW,MACHINE,NO-10-24 X 1/2,CLAMP MTG........................	EA	2
174	33	PAOZZ	5310-00-045-3296	MS35338-43	96906	.WASHER,LOCK CLP MTG HDW NO.10.................................	EA	2
174	34	XBOZZ	5340-00-057-2906	MS21333-71	96906	.CLAMP HYDR LINE SPRT...	EA	6
174	35	MFOZZ		820N3501	27315	.TUBE ASSEMBLY,METAL CKT 141D STRG CYL TO.HD AND PLT OPR V, 1/2"ODX.049WALLX45.500LG..	EA	1
174		PAOZZ	9905-00-935-3863	MS35020-28	96906	..BAND,MARKER CKT 141D...	EA	2
174		MFOZZ		820N35D2	27315	.TUBE ASSEMBLY,METAL CKT 142D STRG CYL TO.HD AND PLT OPR V11/2"ODX.049WALLX43.500LG...................................	EA	1
174		PAOZZ	9905-00-935-3863	MS35020-28	96906	..BAND,MARKER CKT 142D...	EA	1
174	37	XDOZZ		941FS12	30327	.FITTING HYDR LINE CKT 135B AND TEE............................	EA	2
174	38	XDOZZ		883FS12XC8	30327	.REDUCER,TUBE HYDR LINE CKT 135B AND TEE.......................	EA	1
174	39	MFOZZ		44027401	27315	.HOSE ASSY RBR CKT 140 CV TO HYDR PMP..........................	EA	1
174		PAOZZ	9905-00-935-7777	MS35020-25	96906	..BAND,MARKER CKT 140..	EA	2
174	40	XBOZZ	4730-01-041-5233	MS51517A12	96906	.CROSS TUBE HYDR LINE CKT 135A-135B-135D-.40...................	EA	1
174	41	MFOZZ		820P410	27315	.TUBE ASSY STL CKT 135A STRG CYL TO MANF.......................	EA	1
174	42	MFOZZ		820P411	27315	.TUBE ASSEMBLY,STEEL CKT 137A STRG CYL TO.FL CONT RV, 1/2"ODX.049WALLX58.50LG..	EA	1
174		PAOZZ	9905-00-935-3863	MS35020-28	96906	..BAND,MARKER CKT 137A...	EA	2
174	43	XDOZZ		440224012	27315	.ADAPTER,STRAIGHT HYDR LINE 137A AND FL........................	EA	1
174	44	PCOZZ	5330-00-251-8839	MS28778-12	96906	.PACKING,PREFORMED..	EA	3
174	45	MFOZZ		44028001	27315	.HOSE ASSY RBR CKT 123 HYDR DUAL OUT PMP.......................	EA	1
174		PAOZZ	9905-00-935-7777	MS35020-25	96906	..BAND,MARKER CKT 123..	EA	2
174	46	XDOZZ		MS35324-20	96906	.ADAPTER TUBE HYDR LINE CKT 123 HYDR DUAL.OUT PMP TO FL CONT RV..	EA	2
174	47	PAOZZ	5330-00-251-8839	MS28778-12	96906	.PACKING, PREFORMED...	EA	2
174	48	XDOZZ		AN816-14	88044	.NIPPLE TUBE FL CONT RV AND MANF...............................	EA	1
174	49	PAOZZ	5330-00-251-8839	MS28778-12	96906	.PACKING, PREFORMED...	EA	1
174	50	XDOZZ		854FSC12X12	30327	.FITTING TUBE HYDR LINE CKT 123 AND HYDR.......................	EA	1
174	51	PAOZZ	5330-00-816-3546	MS28778-20	96906	.PACKING,PREFORMED HYDR LINE CKT 123 AND.....DUAL OUT PMP...	EA	1

AMC FORM 1776, 1 OCT 73 (REPLACES AMC TEST FORMS 1753 AND 1754, 6 APR 70, WHICH WILL BE USED UNTIL 1 AUL 73) REPAIR PARTS LIST

(1) ILLUSTRATION (A) FIG NO.	(B) ITEM NO.	(2) SMR CODE	(3) NATIONAL STOCK NUMBER	(4) PART NUMBER	(5) FSCM	(6) DESCRIPTION USABLE ON CODE	(7) U/M	(8) QTY INC IN UNIT
174	52	MFOZZ		920A2902	27315	.TUBE ASSEMBLY,METAL CKT 142C STRG CYL TO,HD AND PLT OPR	EA	1
174		PAOZZ	9905-00-935-3863	MS39020-28	96906	..BAND,MARKER CKT 142C............	EA	2
174	53	MFOZZ		820A2901	27315	.TUBE ASSEMBLY,METAL CKT 141C STRG CYL TO,HD AND PLT OPR	EA	
174		PAOZZ	9905-00-935-3863	MS39020-28	96906	..BAND,MARKER CKT 141C TUBE ASSY.............................	EA	2
174	54	MFOZZ		820N30	27315	.TUBE ASSEMBLY,METAL CKT 141B STRG CYL TO,HD AND PLT OPR	EA	1
174		PAOZZ	9905-00-935-3863	MS39020-28	96906	..BAND,MARKER CKT 141B...	EA	2
174	55	MFOZZ		920A44	27315	.TUBE ASSEMBLY,METAL CKT 142B STRG CYL TO,HD AND PLT OPR	EA	1
174		PAOZZ	9905-00-939-3863	MS39020-28	96906	..BAND,MARKER CKT 142B TUBE ASSY.............................	EA	2
174	56	XDOZZ	5310-00-982-4950	MS27040-9	96906	.NUT,PLAIN,SQUARE NO 10-24 CLMP MTG..........................	EA	1
174	57	XDOZZ	5305-00-986-6216	MS35206-269	96906	.SCREW,MACHINE NO 10-24 X 1-1/2 CLAMP MTG.....................	EA	1
174	58	XBOZZ	5340-00-984-8540	MS21333-102	96906	.CLAMP LOOP HYDR LINE CKT 141B-142B SPRT......................	EA	1
174	59	MFOZZ		820P40901	27315	.TUBE ASSEMBLY,METAL CKT 141A STRG CYL TO,HD AND PLT OPR	EA	1
174		PAOZZ	9905-00-939-3863	MS39020-28	96906	..BAND,MARKER CKT 141A...	EA	2
174	60	MFOZZ		820P40902	27315	.TUBE ASSEMBLY,METAL CKT 142A STRG CYL TO,HD AND PLT OPR	EA	1
174		PAOZZ	9905-00-935-3863	MS39020-28	96906	..BAND,MARKER CKT 142A...	EA	2
174	61	XDOZZ	5310-00-761-6882	MS51967-2	96906	.NUT,PLAIN,HEXAGON 1-4-20 CLAMP MTG...........................	EA	2
174	62	PAOZZ	5310-00-582-5965	MS35338-44	96906	.WASHER,LOCK CLP MTG HDW......................................	EA	2
174	63	XBOZZ	5340-00-984-8540	MS21333-102	96906	.CLAMP LOOP HYDR LINE CKT 141A-142A SPRT......................	EA	4
174	64	MFOZZ		440222010	27315	.HOSE ASSY RBR CKT 141 STRG CYL TO HD AND,PLT OPR	EA	1
174		PAOZZ	9905-00-935-7777	MS39020-25	96906	..BAND,MARKER CKT 141...	EA	2
174	65	MFOZZ		44022209	27315	.HOSE ASSY RBR CKT 142 STRG CYL TO HD AND,PLT OPR	EA	1
174		PAOZZ	9905-00-539-7777	MS39020-25	96906	..BAND,MARKER CKT 142...	EA	2
174	66	MFOZZ		820P467	27315	.TUBE ASSEMBLY,METAL CKT 142E STRG CYL TO,HD AND PLT OPR	EA	1
174		PAOZZ	9905-00-935-3863	MS39020-28	96906	..BAND,MARKER CKT 142E...	EA	2
174		PAOZZ	9905-00-539-3863	MS39020-28	96906	..BAND,MARKER CKT 141E...	EA	2
174	69	XDOZZ	5305-00-071-2242	MS90725-9	96906	.SCREW CAP HEXAGON 3-8-16X1 1-8 SUBPLATE......................	EA	2
174	69	PAOZZ	5310-00-637-9541	MS35338-46	96906	.WASHER,LOCK 3-8 SUBPLATE VALVE MTG...........................	EA	2
174	70	XDOZZ	5310-00-732-0558	MS51967-8	96906	.NUT,PLAIN,HEXAGON 3-8-16 VALVE MTG...........................	EA	2
174	71	XDOZZ		206110	50988	.PLATE MOUNTING HD AND PLT OPR V SPRT.........................	EA	1
174	72	XDOZZ		6NR16-10	85044	.NIPPLE TUBE HYDR LINE CKT 135A AND MANF......................	EA	1

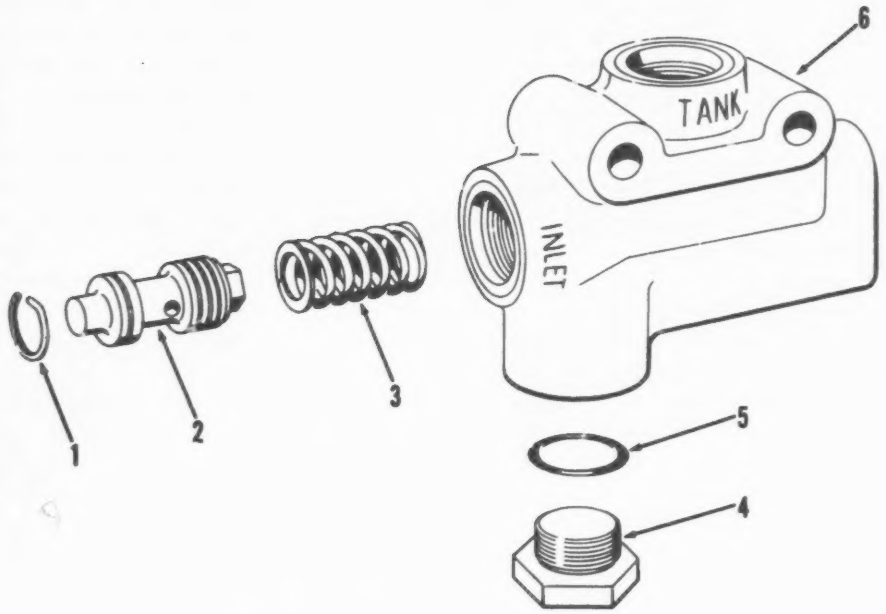

Figure 175. Valve assembly, control

(1) ILLUSTRATION (a) FIG NO.	(b) ITEM NO.	(2) SMR CODE	(3) NATIONAL STOCK NUMBER	(4) PART NUMBER	(5) FSCM	(6) DESCRIPTION USABLE ON CODE	(7) U/M	(8) QTY INC IN UNIT
						FUNCTIONAL GROUP 57 COMPONENTS,HYDRAULIC, STEERING SYSTEM		
175		PAOZZ	4820-00-460-2180	13213E9453	97403	.VALVE CONTROL HYD PIPING	EA	1
175	1	XAOZZ		230661	62983	..RING RETAINING VALVE	EA	1
175	2	PAOZZ	2530-00-034-4198	232799	62983	..VALVE CONTROL HYD SYSTEM	EA	1
175	3	XAOZZ		229766	62983	..SPRING HELIPTICAL VALVE	EA	1
175	4	XAOZZ		181792	62983	..PLUG BODY VALVE	EA	1
175	5	PAOZZ	3930-00-899-4390	154130	62983	..PACKING PREFORMED PLUG	EA	1
175	6	XAOZZ		235474	62983	..BODY VALVE HYD SYSTEM	EA	1

AMC FORM 1778, 1 OCT 72 (REPLACES AMC TEST FORMS 1753 AND 1754, 8 APR 70, WHICH WILL BE USED UNTIL 1 JUL 74)

REPAIR PARTS LIST

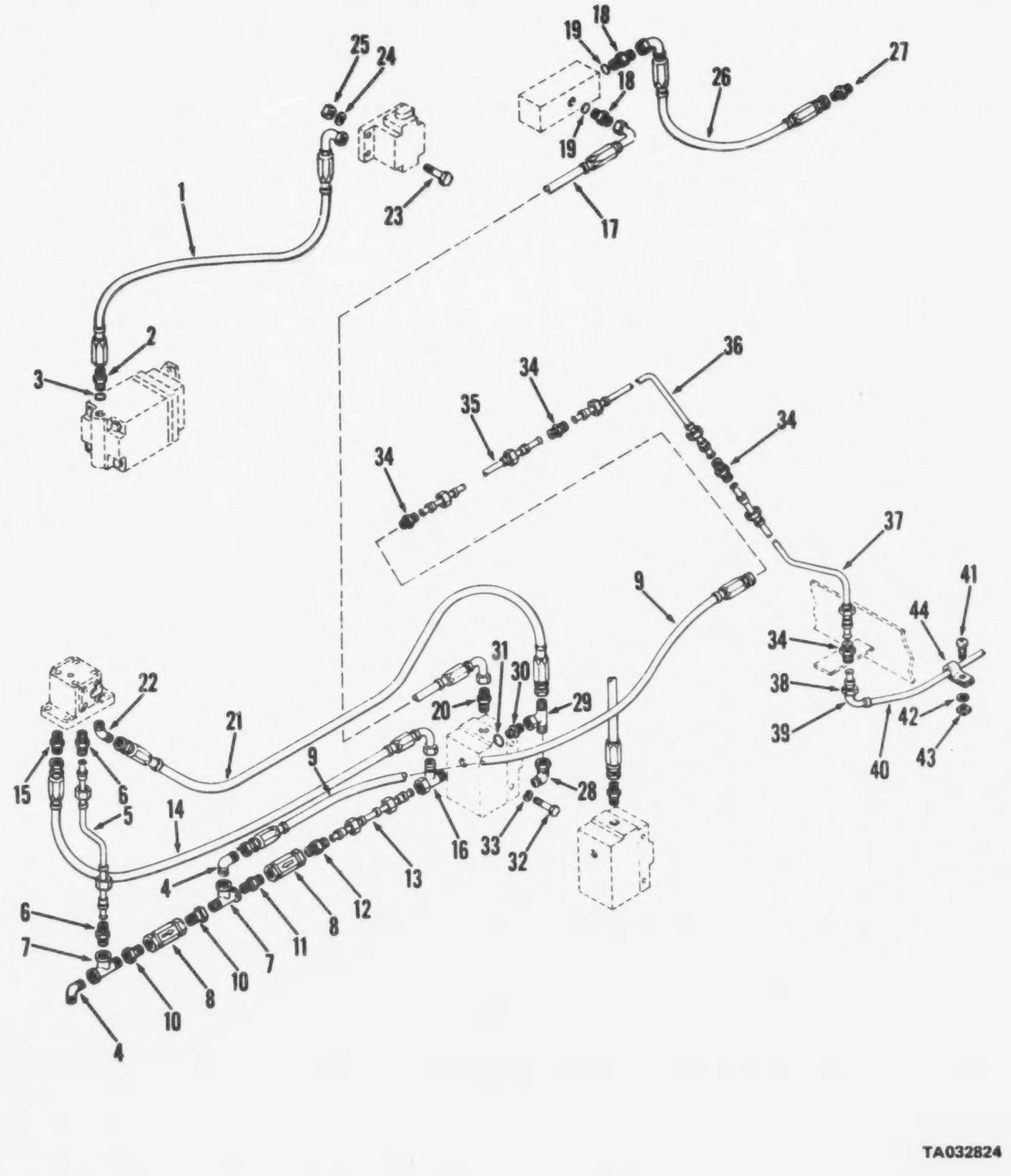

Figure 177. Hose and tube assemblies, hydraulic pump

(1) ILLUSTRATION (a) FIG NO.	(b) ITEM NO.	(2) SMR CODE	(3) NATIONAL STOCK NUMBER	(4) PART NUMBER	(5) FSCM	(6) DESCRIPTION USABLE ON CODE	(7) U/M	(8) QTY INC IN UNIT
						FUNCTIONAL GROUP 57 COMPONENTS,HYDRAULIC,		
						STEERING SYSTEM		
177		MFOZZ		44028ED5	27315	.HOSE ASSY RBR CKT 128 HYDR PMP TO CV	EA	1
177	2	PAOZZ		44Q224D12	27315	.ADAPTER,STR,TUBE TO BOSS CKT 128	EA	1
177	3	PAOZZ	5330-00-285-9842	MS28778-10	96906	..PACKING PREFMD	EA	2
177	4	PBOZZ	4730-00-231-3013	MS20822-8	96906	..ELBOW,TUBE TO PIPE 90 DEG	EA	2
177	5	MFOZZ		820P478	27315	.TUBE ASSEMBLY,METAL CKT 128A CV TO CV	EA	1
177	6	PAOZZ	4730-00-194-1115	AN816-12	88044	.ADAPTER STRAIGHT HYDR LINE CKT 128A	EA	3
177	7	PAOZZ	4730-00-958-1475	44026193	27315	.TEE,PIPE HYDR LINES CKT 128-128A	EA	1
177	8	PAOZZ	4820-00-494-6555	DT8P1-06-30-1051	62983	.VALVE,CHECK HYD SYSTEM	EA	1
177		MFOZZ		44027303	27315	.HOSE ASSY RBR CKT 132E CV TO FR STRG CYL	EA	1
177	10	XDOZZ	4730-00-497-1667	3-4X3-8PTRS	30780	.BUSHING,PIPE HYDR LINES AND CV	EA	3
177	11	PAOZZ		44024103	27315	.NIPPLE,PIPE TEE AND CV	EA	1
177	12	PAOZZ	4730-00-322-8456	13205E3937-2	97403	.ADAPTER,STRAIGHT CV AND HYDR LINE CKT	EA	1
177	13	MFOZZ		820N72D1	27315	.TUBE ASSEMBLY,METAL CKT 127B CV TO FL	EA	1
177	14	MFOZZ		44027502	27315	.HOSE ASSY RBR CKT 127A CV TO FL CONT RV	EA	1
177	15	PAOZZ	4730-00-441-8700	MS51500A8-4	96906	.NIPPLE TUBE HYDR LINE CKT 127A AND CV	EA	1
177	16	XDOZZ	4730-01-053-9707	44021706	27315	.TEE,TUBE HYDR LINES CKT 127A-127B AND FL.CONT RV	EA	1
177	17	MFOZZ		44026301	27315	.HOSE ASSY RBR CKT 124 HYDR DUAL OUT PMP	EA	1
177	18	PAOZZ		MS39324-12-10	96906	.ADAPTER,STRAIGHT HYDR LINE CKT 124 AND FL CONT RV	EA	1
177	19	PAOZZ	5330-00-285-9842	MS28778-1C	96906	.PACKING, PREFORMED	EA	1
177	20	PAOZZ		MS35296-16A	96906	.ELBOW,FLANGE TOHOSE HYDR LINE CKT 124 AND FL CONT RV	EA	1
177	21	MFOZZ		44027305	27315	.HOSE ASSY RBR CKT 131 CV TO FL CONT RV	EA	1
177		PAOZZ	4730-00-451-2703	MS39290-8-8B	96906	..COUPLING,HOSE HYDR HOSE CONN	EA	1
177	22	PAOZZ	4730-00-964-7776	MS20823-8	96906	.ELBOW,TUBE TO PIPE HYDR LINE CKT 131 AND.CV	EA	1
177	23	PAOZZ	5305-00-225-3839	MS90725-8	96906	.SCREW CAP HEXAGON 3-8-16X1 CHK VALVE MTG	EA	4
177	26	PAOZZ	5310-00-637-9541	MS35338-46	96906	.WASHER,LOCK 3-8 CHK VALVE MTG	EA	4
177	25	PAOZZ	5310-00-732-0558	MS51967-8	96906	.NUT,PLAIN,HEXAGON 3-8-16 CHK VALVE MTG	EA	4
177		MFOZZ		44027301	27315	.HOSE ASSY RBR CKT 134 FL CONT RV TO MANF	EA	1
177	27	PAOZZ	4730-00-194-1115	AN816-12	88044	.ADAPTER STRAIGHT HYDR LINE CKT 134A AND	EA	1
177	28	XDOZZ		44022306	27315	.ELBOW TUBE HYDR LINE CKT 134	EA	1
177	29	XDOZZ		44021606	27315	.TEE,TUBE HYDR LINES CKT 131-134	EA	1
177	30	XDOZZ		440224012	27315	.ADAPTER,STRAIGHT FL CONT RV AND TEE	EA	1
177	31	PAOZZ	5330-00-285-9842	MS28778-1C	96906	.PACKING, PREFORMED HOSE	EA	1
177	32	PAOZZ	5306-00-225-8504	MS90725-4C	96906	.BOLT,MACHINE 5-16-18X2 VALVE MTG	EA	2
177	33	PAOZZ	5310-00-407-9566	MS35338-45	96906	.WASHER,LOCK 5-16 VALVE MTG	EA	2
177	34	PAOZZ	4730-00-359-4731	8-37-4	92985	.FITTING TUBE HYDR LINES CKT 132E-132D	EA	2
177	35	MFOZZ		820N51	27315	.TUBE ASSEMBLY,METAL CKT 132D	EA	1
177	36	MFOZZ		820P459	27315	.TUBE ASSEMBLY,METAL CKT 132C	EA	1

(1) ILLUSTRATION (a) FIG NO.	(b) ITEM NO.	(2) SMR CODE	(3) NATIONAL STOCK NUMBER	(4) PART NUMBER	(5) FSCM	(6) DESCRIPTION USABLE ON CODE	(7) U/M	(8) QTY INC IN UNIT
177	37	MFOZZ		820P458	27315	.TUBE ASSEMBLY,METAL CKT 132B.............................	EA	1
177	38	XDDZZ	4730-00-125-7921	C7924X8	79470	.LOCKNUT TUBE HYDR LINE CKT 132B	EA	1
177	39	XDDZZ		8558HFS08	30327	.ELBOW TUBE HYDR LINES CKT 132A-132B..........................	EA	1
177	40	MFOZZ		820P441	27315	.TUBE ASSEMBLY,METAL CKT 132A	EA	1
177	41	XBOZZ		MS35206-263	96906	.SCREW,MACHINE,10-24 X 1/2,CLAMP MTG........................	EA	1
177	42	PAOZZ	5310-00-045-3296	MS35338-43	96906	.WASHER,LOCK NO 10 CLMP MTG..................................	EA	1
177	43	PAOZZ	5310-00-982-4937	MS27040-8	96906	.NUT SQ NO.10-24 CLP MTG HDW..................................	EA	1
177	44	PAOZZ	5340-00-057-2904	MS21333-71	96906	.CLAMP,LOOP HYDR LINE CKT 132A SPRT..........................	EA	1

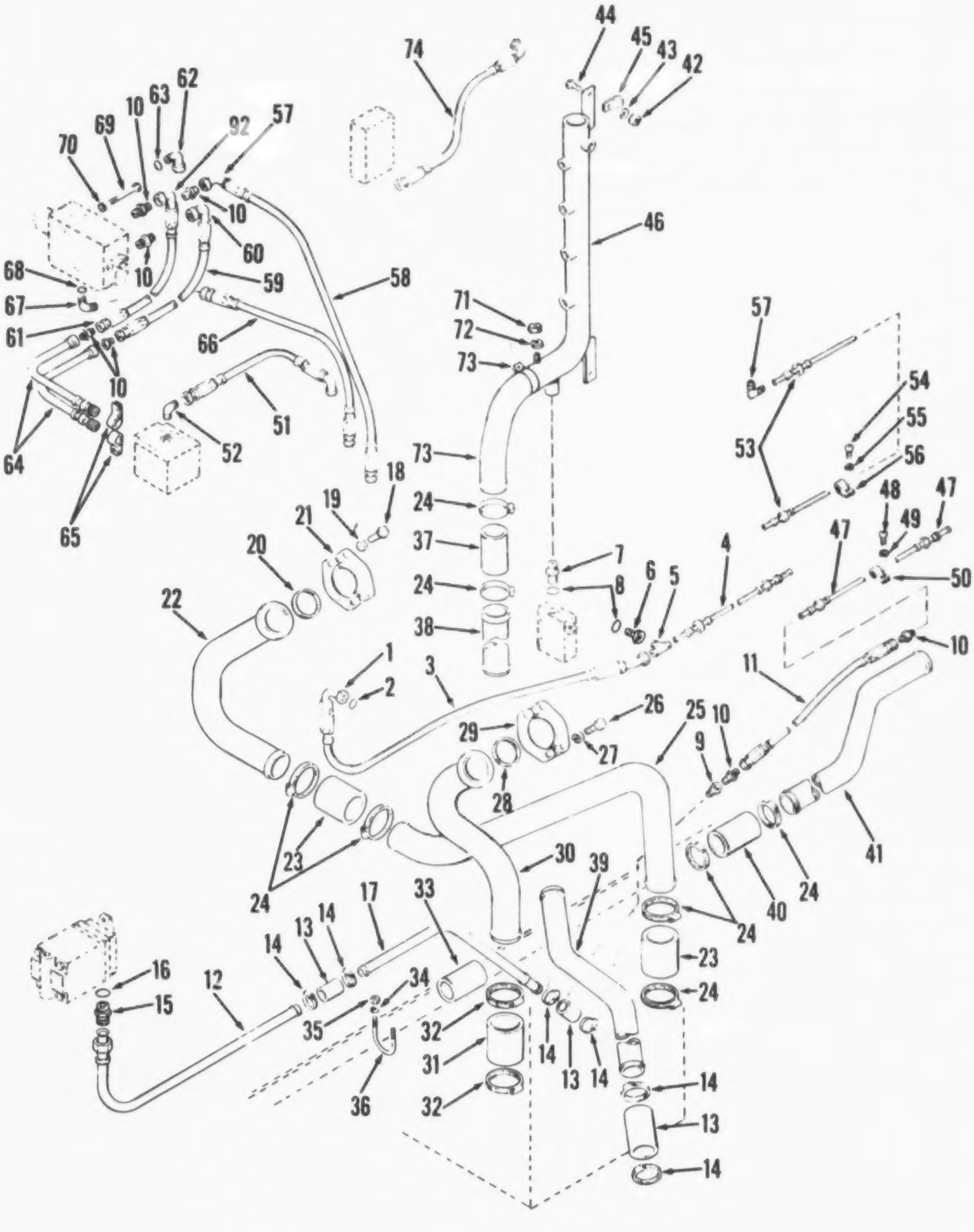

Figure 178. Hose and tube assemblies, hydraulic pump

(1) ILLUSTRATION (a) FIG NO.	(b) ITEM NO.	(2) SMR CODE	(3) NATIONAL STOCK NUMBER	(4) PART NUMBER	(5) FSCM	(6) DESCRIPTION USABLE ON CODE	(7) U/M	(8) QTY INC IN UNIT
						FUNCTIONAL GROUP 57 COMPONENTS,HYDRAULIC,		
						STEERING SYSTEM		
178	1	PAOZZ	4730-00-763-7700	12BCAXC	70434	.ELBOW,TUBE TO BOSS HYDR DUAL PMP AND HYDR LINE CKT 147E - ELBOW..................................	EA	1
178	2	PCOZZ	5330-00-251-8839	MS28778-12	96906	.PACKING,PREFORMED HYD PUMP..................................	EA	2
178	3	MFOZZ		440281D1	27315	.HOSE ASSEMBLY CKT 147E HYDR DUAL PMP TO....................	EA	1
178	4	MFOZZ		820P423	27315	.TUBE ASSEMBLY METAL CKT 147D HYDR DUAL....................	EA	1
178	5	XDOZZ	4730-00-054-7296	1256BXSS	30780	.TEE,TUBE HYDR LINES CKT 147D-147E	EA	1
178	6	PAOZZ		MS39324-12-10	96906	.ADAPTER,STRAIGHT TEE	EA	3
178	7	PAOZZ		AN816-14	98044	.NIPPLE TUBE RV AND MANF....................	EA	1
178	8	PAOZZ	5330-00-285-9842	MS28778-10	96906	.PACKING PREFORMED HYD PIPING....................	EA	4
178	9	PAOZZ	4730-00-298-9548	8-8FTXS	30780	.ADAPTER,STRAIGHT HYDR LINE CKT 162B AND..YDR TANK ASSY......	EA	1
178	11	MFOZZ		440273D2	27315	.HOSE ASSY,RUBBER: FILTER MOTOR,CKT 162B....................	EA	1
178	10	PAOZZ	4730-00-359-4731	8-37-4	92585	.FITTING UNION HYDR LINE CKT 162B AND HYDR TANK ASSY..........	EA	1
178	12	MFOZZ		13205E3886	97403	.TUBE ASSEMBLY,METAL CKT 322E HYDR PMP TO.HYDR FLTRS..........	EA	1
178	13	PCOZZ		MIL-H-52544	81349	.HOSE, SUCTION HYDRAULIC....................	EA	V
178	14	PAOZZ		MS3594--13	96906	.CLAMP HOSE SUCT HOSE AND HYDR LINES CKT....................	EA	6
178	15	PAOZZ		440224D30	27315	.ADAPTER HYDR PMP AND HYDR LINE CKT 322....................	EA	2
178	16	PAOZZ	5330-00-316-3546	MS28778-20	96906	.PACKING PREFORMED HYDR LINE CKT 322 CONN.AND HYDR PMP.......	EA	1
178	17	MFOZZ		20U23	27315	.TUBE ASSEMBLY,METEL CKT 322A....................	EA	1
178	18	PAOZZ	5305-00-042-6617	MS90725-113	96906	.SCREW,CAP,HEXAGON CLP HALF MTG....................	EA	4
178	19	PAOZZ	5310-00-584-5272	MS35338-48	96906	.WASHER LOCK 1-2....................	EA	4
178	20	PAOZZ	5330-00-285-9847	MS28778-232	96906	.PACKING,PREFORMED CLAMP HALF MOUNTING....................	EA	4
178	21	XDOZZ	4730-00-400-6544	MS35254-40	96906	.CLAMP,HALF HYDR LINE CKT 319 AND DUAL OUT HYDR PMP..........	EA	2
178	22	MFOZZ		13205E4323	97403	.TUBE ASSEMBLY,METAL CKT 319 HYDR DUAL OUT PMP TO HYDR FLTRS.	EA	1
178	23	PCOZZ	4720-00-469-6597	13213E9766-9	97403	.HOSE,NONMETALIC,HYD LINES,CKT 319-319A....................	EA	2
178	24	PAOZZ	4730-00-908-6292	MS35842-14	96906	.CLAMP,HOSE HYDR LINES CKT 319-319A....................	EA	20
178	25			20U22	27315	.TUBE,STEEL,CKT 319A....................	EA	1
178	26	PAOZZ	5305-00-724-5906	MS90725-156	96906	.SCREW CAP HEXAGON CLP HALF MTG....................	EA	4
178	27	PAOZZ	5310-00-820-6653	MS35338-50	96906	.WASHER,LOCK CLP HALF MTG HDW....................	EA	4
178	28	PAOZZ	5330-00-608-6432	MS28775-237	96906	.PACKING PREFORMED HYDR LINE CKT 320 AND..YDR DUAL PMP.......	EA	1
178	29	XDOZZ		MS35254-48	96906	.CLAMP HALF HYDR LINE CKT 320 AND HYDR....................	EA	2
178		XDOZZ		2-20U21	27315	..HEAD FLANGE 3 NOM SZ 500PSI....................	EA	1
178	30	MFOZZ		13205E3459	97403	..TUBE ASSEMBLY,METAL CKT 320 HYDR DUAL....................	EA	1
178		XAOZZ		1-20U21	27315	..TUBE STEEL MFR FR 30D X .093 WALL....................	FT	V
178	31	PCOZZ	4720-00-469-4920	MS39305-48	96906	.HOSE,NONMETALLIC,HYD LINE,CKT 320....................	EA	1
178	32	PAOZZ	4730-00-908-6293	MS35842-15	96906	.CLAMP HOSE SUCT HOSE AND HYDR LINE CKT....................	EA	8
178	33	PAOZZ	4720-00-469-4921	MS39305-24	96906	.HOSE,NOMETALLIC,MANIFOLD TO FILTER....................	EA	1
178	34	PAOZZ	5310-00-505-0762	MS51967-3	96906	.NUT,PLAIN HEXAGON 1/4-20 U-BOLT ATTACHING....................	EA	4
178	35	PAOZZ	5310-00-582-5965	MS35338-44	96906	.WASHER,LOCK 1/4 U-BOLT ATTACHING....................	EA	4
178	36	PAOZZ		820P35405	27315	.BOLT,U HYD PP....................	EA	2
178	37	PCOZZ		MIL-H-52544A	96906	.HOSE,SUCTION: MANIFULD AND HYD FILTER....................	FT	V
178	38	PBOZZ		13215E3605	97403	.MANIFOLD ASSEMBLY HYD PIPING....................	EA	1
178	39	MFOZZ		20U26	27315	.TUBE ASSEMBLY,METAL CKT 321 HYDR PMP TO..YDR TANK ASSY......	EA	1
178	40	PCOZZ		MS39305-32	96906	.HOSE,RUBBER: SUCTION 2 in ID X 6 1/2 in....................	EA	3
178	41	XDOZZ		4C08	27315	..MANIFOLD HYD PIPING....................	EA	1
178	42	PAOZZ	5310-00-732-0558	MS51967-8	96906	..NUT,PLAIN,HEXAGON MANF DR MTG HDW....................	EA	2

(1) ILLUSTRATION (a) FIG NO.	(b) ITEM NO.	(2) SMR CODE	(3) NATIONAL STOCK NUMBER	(4) PART NUMBER	(5) FSCM	(6) DESCRIPTION USABLE ON CODE	(7) U/M	(8) QTY INC IN UNIT
178	43	PAOZZ	5310-00-637-9541	MS35338-46	96906	..WASHER,LOCK MANF OR MTG HDW..............................	EA	5
178	44	PAOZZ	5305-01-010-2362	MS18154-59	96906	.SCREW,CAP,HEXAGON MANF OR MTG HDW..............................	EA	2
178	45	XBOZZ		MS21333-7	96906	.CLAMP,LOOP,TUBE..............................	EA	1
178	46	XDOZZ	2805-01-028-4567	40U11	27315	.MANIFOLD,DRAIN MANIFOLD..............................	EA	1
178	47	MFOZZ		820P504	27315	.TUBE ASSEMBLY,METAL CKT 162A HYDR MOT TO.HYDR TANK ASSY.....	EA	1
178	48	XBOZZ		MS35206-262	96906	.SCREW,MACHINE,10-24 X 1/2,CLAMP MTG..............................	EA	3
178	49	PAOZZ	5310-00-045-3296	MS35338-43	27315	.WASHER LOCK CLP MTG HDW-NO. 10..............................	EA	3
178	50	PAOZZ	5340-00-057-2904	MS21333-71	96906	.CLAMP,LOOP HYDR LINE CKT 162A SPRT..............................	EA	3
178	51	MFOZZ		44027508	27315	.HOSE ASSEMBLY CKT 162 HYDR MOT TO HYDR..............................	EA	1
178	52	PAOZZ	4730-00-844-3308	8-4CBTXS	30780	.ELBOW,PIPE TO TUBE HYDR LINE CKT 162 AND.HYDR MOT..........	EA	1
178	53	MFOZZ		820P42201	27315	.TUBE ASSEMBLY METAL CKT 147C CV TO RV..............................	EA	1
178		PAOZZ	4730-01-050-6014	MS51533B12	96906	..SLEEVE,FLARED,TUBE CPLG NUT STOP,3/4..............................	EA	2
178		PAOZZ	4730-00-812-0924	MS51531B12	96906	..NUT,TUBE COUPLING HYDR PIPE CONN..............................	EA	2
178		PAOZZ	9905-00-935-7777	MS39020-29	96906	..BAND,MARKER CKT 147C..............................	EA	2
178	54	XBOZZ		MS90725-3	96906	..SCREW,CAP,HEX HD,1/4-20 X 1/2,CLAMP MTG..............................	EA	1
178	55	PAOZZ	5310-00-582-5965	MS35338-44	96906	.WASHER,LOCK CLP MTG HDW..............................	EA	9
178	56	PAOZZ	5340-00-809-1494	MS21333-105	96906	.CLAMP,LOOP HYDR LINE CKT 147C SPRT..............................	EA	1
178	57	PAOZZ	4730-00-933-0726	44047017	27315	.ELBOW 90 DEGREE HYDR LINE CKT 147C..............................	EA	2
178	58	MFOZZ		44028204	27315	.HOSE ASSEMBLY CKT 147A CV TO RV..............................	EA	1
178	59	MFOZZ		44028202	27315	.HOSE ASSEMBLY CKT 148B HYDR MOT TO CV..............................	EA	1
178	60	PAOZZ		44022308	27315	.ELBOW,SWIVEL FLANGE HYDR LINE CKT 149B..............................	EA	1
178	61	MFOZZ		44028002	27315	.HOSE ASSEMBLY CKT 149B HYDR MOT TO CV..............................	EA	1
178	62	PAOZZ	4730-00-460-6130	12-16C50XS	30780	.ELBOW STANDARD HYDR LINE CKT 150 AND CV..............................	EA	1
178	63	PAOZZ	5330-00-285-9842	MS28778-10	96906	.PACKING, PREFORMED..............................	EA	1
178	64	MFOZZ		2094602	27315	.TUBE FLANGE CKT 148A HYDR MOT TO CV..............................	EA	1
178		PAOZZ	4730-01-028-3442	132C5E3922-1	97403	..CONNECTOR HYDR TUBE CONN..............................	EA	1
178	65	PAOZZ	5340-00-778-2738	MS21333-2	96906	.CLAMP,LOOP HYDR MOT LINE CONN..............................	EA	2
178	66	MFOZZ		44028003	27315	.HOSE ASSEMBLY CKT 150 CV TO MANF DR..............................	EA	1
178	67	PAOZZ	4730-00-946-7823	849FSC12X12	30327	.ELBOW,TUBE TO BOSS HYDR LINE CKT 150 AND.CV..............................	EA	1
178	68	PAOZZ	5330-00-251-8839	MS28778-12	96906	.PACKING, PREFORMED..............................	EA	1
178	69	PAOZZ	5305-00-269-3222	MS90725-72	96906	.SCREW,CAP,HEXAGON CV MTG HDW 3-8-16X3-1-2 LG..............................	EA	3
178	70	PAOZZ	5310-00-004-5033	MS35338-46	96906	.WASHER, LOCK 3/8 VALVE MOUNTING..............................	EA	3
178	71	PAOZZ	5310-00-761-6882	MS51967-2	96906	.NUT,PLAIN,HEXAGON U-BOLT MTG HDW 1-4-20..............................	EA	6
178	72	PAOZZ	5310-00-582-5965	MS35338-44	96906	.WASHER,LOCK 1/4..............................	EA	4
178	73	XBOZZ		820P39403	27315	.U-BOLT MANF DR SPRT..............................	EA	2
178	74	XDOZZ		40010	27315	.MANIFOLD DRAIN..............................	EA	1

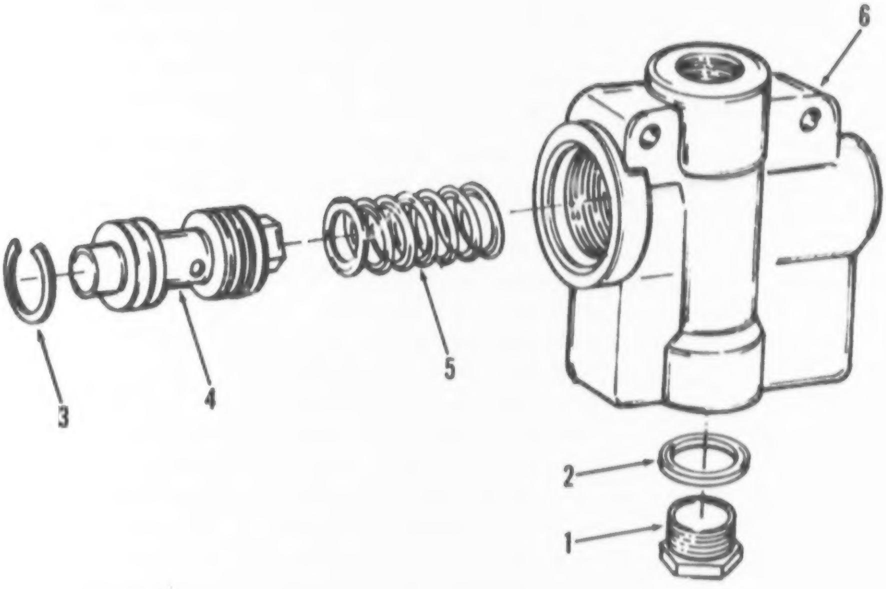

Figure 179. Valve assembly, relief

(1) ILLUSTRATION (a) FIG NO.	(b) ITEM NO.	(2) SMR CODE	(3) NATIONAL STOCK NUMBER	(4) PART NUMBER	(5) FSCM	(6) DESCRIPTION USABLE ON CODE	(7) U/M	(8) QTY INC IN UNIT
						FUNCTIONAL GROUP 57 COMPONENTS,HYDRAULIC, STEERING SYSTEM		
179		PAOOO	4820-00-439-6016	13213E9427	97403	.VALVE RELIEF HYD SYSTEM....................................	EA	1
179	1	XAOZZ		181792	62983	..PLUG BODY RELIEF VALVE....................................	EA	1
179	2	PAOZZ	3930-00-899-4390	15413C	62983	..PACKING PREFORMED RELIEF VALVE PLUG.......................	EA	1
179	3	XAOZZ		230661	62983	..RING RETAINING RELIEF VALVE...............................	EA	1
179	4	PAOZZ	2530-00-034-4188	232795	62983	..VALVE CONTROL RELIEF......................................	EA	1
179	5	PAOZZ	5360-00-755-0429	239766	62983	..SPRING HELICAL RELIEF VALVE...............................	EA	1
179	6	XAOZZ		259101	62983	..BODY VALVE RELIEF...	EA	1

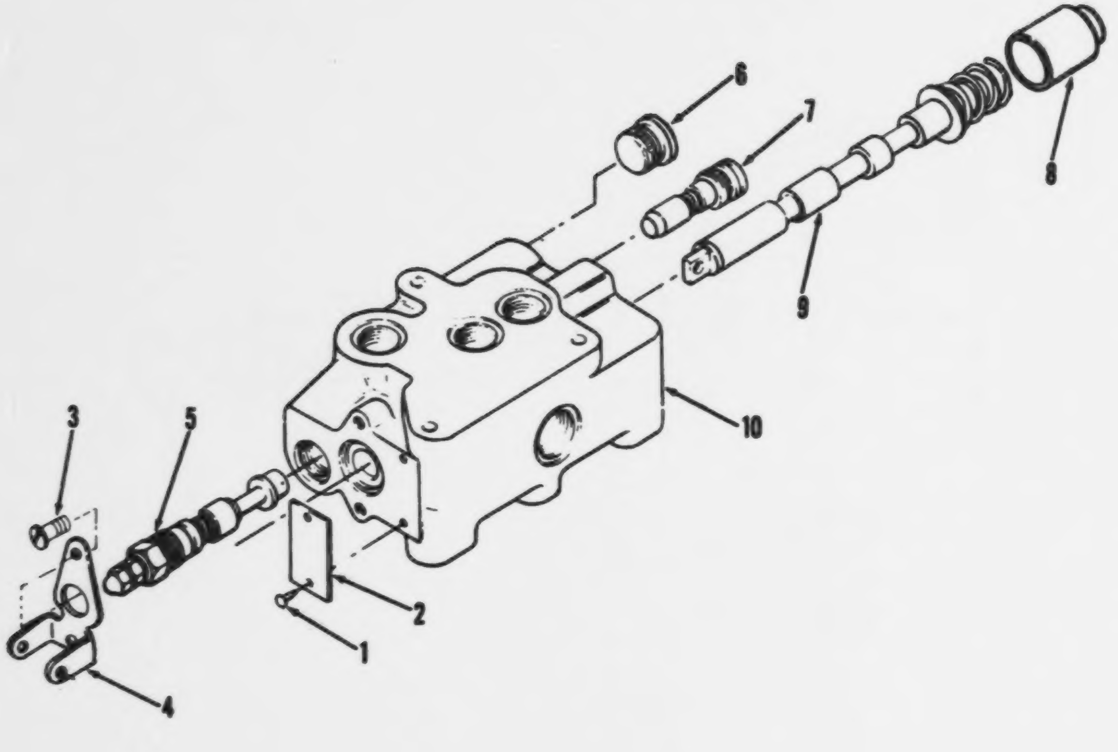

Figure 180. Valve assembly, control: fan drive

(1) ILLUSTRATION (a) FIG NO.	(b) ITEM NO.	(2) SMR CODE	(3) NATIONAL STOCK NUMBER	(4) PART NUMBER	(5) FSCM	(6) DESCRIPTION USABLE ON CODE	(7) U/M	(8) QTY INC IN UNIT
						FUNCTIONAL GROUP 57 COMPONENTS,HYDRAULIC, STEERING SYSTEM		
180	1	XBOZZ	5305-01-029-6826	39X4	45681	..SCREW MACHINE IDENT PLATE..................................	EA	1
180	2	XBOZZ		562050	45681	..PLATE IDENTIFICTION FAN CONTROL VALVE......................	EA	1
180	3	XBOZZ		MS35206-263	96906	..SCREW,MACHINE: 10-24 X 1/2,SPOOL SEAL MTG..................	EA	2
180	4	XAOZZ		655030	45681	..SEAL SPOOL CONTROL VALVE...................................	EA	1
180	6	PAOZZ	4820-00-106-0396	108X10	45681	..VALVE,PLUG CONTROL VALVE...................................	EA	1
180	9	XAOZZ		665217	45681	..SPOOL VALVE FAN CONTROL....................................	EA	1
180		PAOZZ	4820-00-458-8069	13213E9442	97403	.VALVE LINEAR,DIR FAN DRIVE ASSEMBLY.........................	EA	1

best copy available

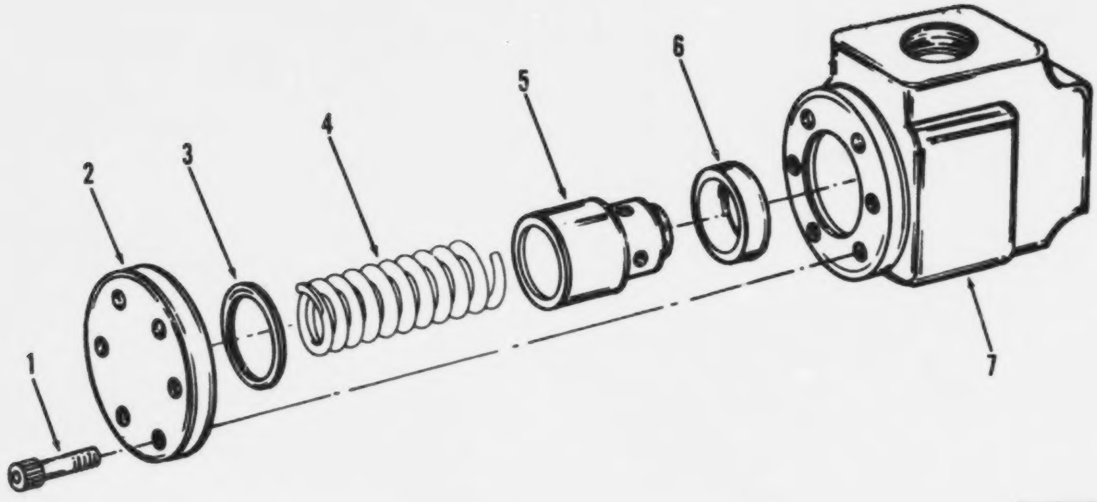

Figure 181. Valve assembly, check: right angle

(1) ILLUSTRATION (a) FIG NO.	(b) ITEM NO.	(2) SMR CODE	(3) NATIONAL STOCK NUMBER	(4) PART NUMBER	(5) FSCM	(6) DESCRIPTION USABLE ON CODE	(7) U/M	(8) QTY INC IN UNIT
						FUNCTIONAL GROUP 57 COMPONENTS,HYDRAULIC, STEERING SYSTEM		
181		PAOOO	4820-00-182-9089	13216E7856	97403	.VALVE CHECK RIGHT ANGLE...................................	EA	1
181	1	PAOZZ	5305-00-450-7499	1071	62983	..SCREW CAP SOCKET COVER...................................	EA	6
181	2	XAOZZ		94059	62983	..COVER VALVE RT ANGLE VALVE...............................	EA	1
181	3	PAOZZ	5330-00-458-8485	262395	62983	..PACKING PREFORMED COVER..................................	EA	1
181	4	XAOZZ		83902	62983	..SPRING HELICAL RT ANGLE VALVE............................	EA	1
181	5	PAOZZ	2520-00-741-7268	2714	62983	..VALVE CHECK RT ANGLE.....................................	EA	1
181	6	XAOZZ		2715	62983	..SEAT VALVE RT ANGLE......................................	EA	1
181	7	XAOZZ		94015	62983	..BODY VALVE RT ANGLE......................................	EA	1

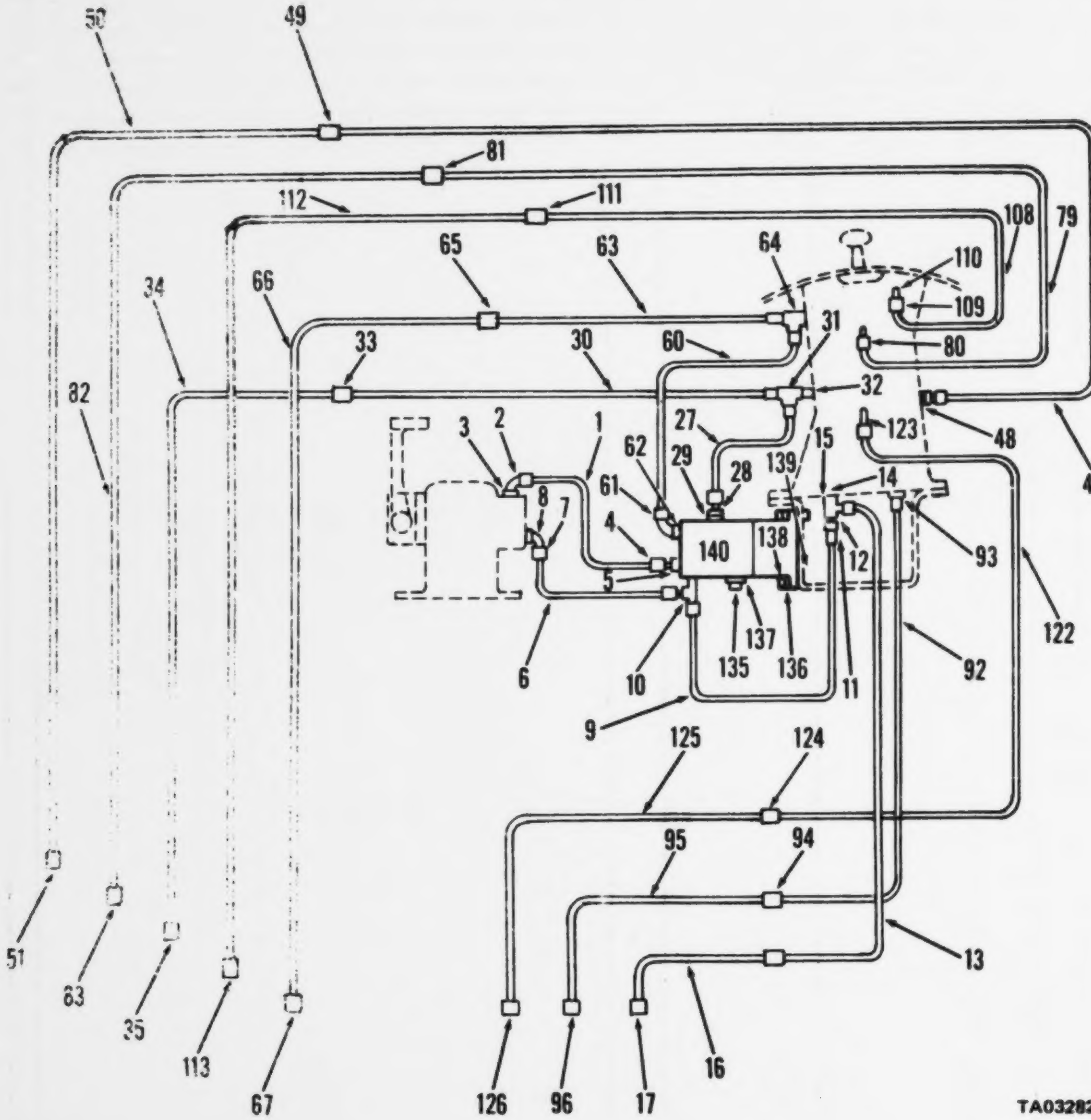

Figure 182. Hose and tube assemblies, torque converter and transmission (Sheet 1 of 2)

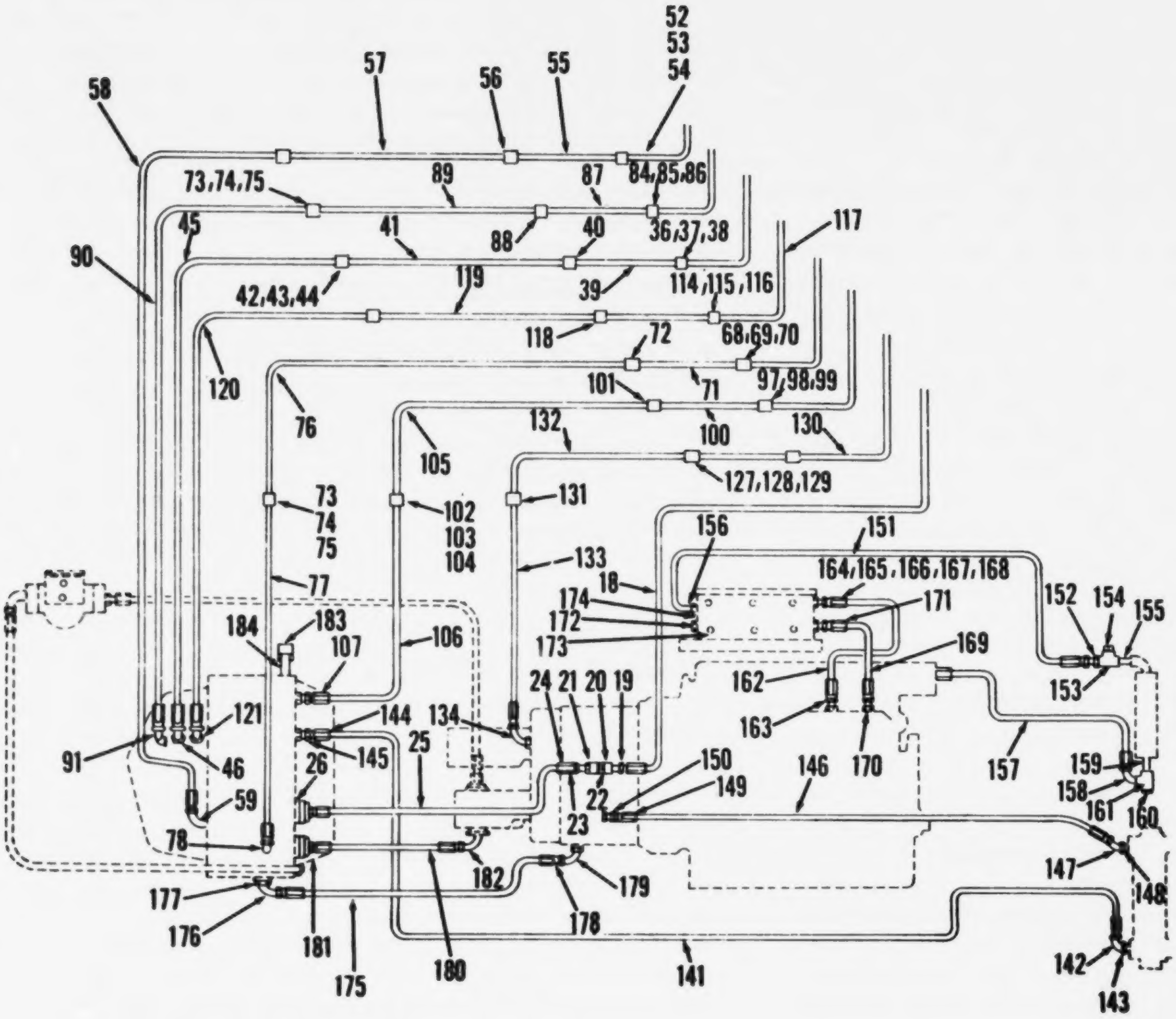

Figure 182. Hose and tube assemblies, torque converter and transmission (Sheet 2 of 2)

(1) ILLUSTRATION (a) FIG NO.	(b) ITEM NO.	(2) SMR CODE	(3) NATIONAL STOCK NUMBER	(4) PART NUMBER	(5) FSCM	(6) DESCRIPTION USABLE ON CODE	(7) U/M	(8) QTY INC IN UNIT
						FUNCTIONAL GROUP 58 TORQUE CONVERTER AND TRANSMISSION HOSE AND TUBE ASSEMBLIES		
182		AOOFZ		8100J0599	27315	PIPING ASSEMBLY ENGINE TORQUE CONVERTER AND TRANSMISSION....	EA	1
182	1	MFOZZ		820P461	27315	.TUBE ASSEMBLY 101 HADN VALVE TO PILOT....309, 3/8"ODX.035X10.75LG..........	EA	1
182	2	XDOZZ	4730-00-785-3090	C5515X6	79470	.ELBOW,TUBE TO BOSS HAND VALVE..........	EA	1
182	3	PAOZZ	5330-00-804-5695	MS28778-6	96906	.PACKING PREFORMED TUBE FITTING..........	EA	1
182	4	XBOZZ	4730-00-482-4136	MS35324-6-6	96906	.ADAPTER,STRAIGHT,TU 37 DEGREE FLARE	EA	1
182	5	PAOZZ	5330-00-804-5695	MS28778-6	96906	.PACKING PREFORMED ADAPTOR..........	EA	1
182	6	MFOZZ		820P462	27315	TUBE ASSEMBLY 113 HADN VALVE TO TEE CKT 325C, .TUBE ASSEMBLY 113 HADN VALVE TO TEE CKT..........	EA	1
182		PAOZZ	9905-00-935-3863	MS39020-28	96906	..BAND,MARKER TUBE ASSY CKT 325C..........	EA	2
182	7	XDOZZ	4730-00-983-8448	2062-6-6S	01276	.ELBOW,TUBE TO BOSS HAND VALVE..........	EA	1
182	8	PAOZZ	5330-00-804-5695	MS28778-6	96906	.PACKING PREFORMED TUBE FITTING..........	EA	1
182	9	MFOZZ		820P443	27315	.TUBE ASSEMBLY 94 HAND VALVE TO TEE CKT...5B, 3/8"ODX.035WALLX8.13LG..........	EA	1
182		PAOZZ	9905-00-935-3863	MS39020-28	96906	..BAND,MARKER TUBE ASSY CKT 325B..........	EA	2
182	10	XDOZZ		440217-D5	27315	.TEE TUBE SWIVEL NUT RUN 37 DEGREE FLARE..........	EA	1
182	11	XBOZZ		C5105X8	79470	.FITTING FLARED TUBE 37 DEGREES..........	EA	1
182	12	XBOZZ		C5015X8X6	79470	.REDUCER TUBE FLARED TUBE 1-2 TO 3-8..........	EA	1
182	13	MFOZZ		820P449D1	27315	.TUBE ASSEMBLY,METAL TEE TO XMSN CKT 325A..........	EA	1
182		PAOZZ	9905-00-935-3863	MS39020-28	96906	..MARKER,BAND TUBE ASSY CKT 325A..........	EA	2
182	14	XDOZZ	4730-01-053-9707	44021706	27315	.ELBOW,TUBE SWIVEL NUT RUN 45 DEGREE FLARE,7/16 TUBE SIZE....	EA	1
182	15	XBOZZ	4730-00-288-9948	8-8FTXS	30780	.ADAPTER,STRAIGHT TEE..........	EA	1
182	16	MFOZZ		440222D15	27315	.HOSE ASSEMBLY TO XMSN CKT 325D DOUBLE	EA	1
182		PAOZZ	9905-00-935-7777	MS39020-25	96906	..BAND,MARKER HOSE ASSY CKT 325D..........	EA	2
182	17	XDOZZ		320450-D123	27315	.CLAMP LOOP PLAIN 1-2 INCH CKT 325E..........	EA	1
182	18	MFOZZ		820N58	27315	.TUBE ASSEMBLY,STEEL TO XMSN AND TORQUE... .... CKT325E,1/2"ODX.049WALL,59.31LG..........	EA	1
182	19	XDOZZ	4730-00-322-8456	13205E3937-2	97403	.ADAPTER,STRAIGHT TUBE CKT 325..........	EA	1
182	20	XDOZZ		509-D13	27315	.BUSHING TUBE CKT 325..........	EA	1
182	21	XDOZZ		440240-D7	27315	.TEE PIPE TUBE CKT 325..........	EA	1
182	22	XDOZZ		20U28-D122	27315	.NIPPLE TUBE CKT 325..........	EA	1
182	23	XDOZZ		440235-D7	27315	.ELBOW,PIPE STREET TUBE CKT 325..........	EA	1
182	24	XBOZZ	4730-00-188-8012	AN816-25	88044	.ADAPTER,STRAIGHT,PI FLARED TUBE CKT 325..........	EA	1
182	25	MFOZZ		440265D1	27315	.HOSE ASSEMBLY TORQUE CONVERTER TO XMSN..........	EA	1
182		PAOZZ	9905-00-258-1441	MS35020-30	96906	..BAND,MARKER HOSE ASSY CKT 318..........	EA	4
182	26	XBOZZ	4730-01-042-5252	MS35296-248	96906	.CONNECTOR,SWIVE L FLANGE TO PORT CKT 318..........	EA	1
182	27	MFOZZ		820N66D3	27315	.TUBE ASSEMBLY 102 PILOT VALVE-TO TEE CKT.312B..........	EA	1
182		PAOZZ	9905-00-935-3863	MS35020-28	96906	..BAND,MARKER TUBE ASSY CKT 312B..........	EA	2
182	28	XBOZZ	4730-01-024-1321	MS39324-4-4	96906	.ADAPTER,STRAIGHT TUBING 37 DEGREE FLARE..........	EA	1
182	29	PAOZZ	5330-00-805-2966	MS28778-4	96906	.PACKING PREFORMED TUBE FITTING CKT 312..........	EA	1

(1) ILLUSTRATION (a) FIG NO.	(b) ITEM NO.	(2) SMR CODE	(3) NATIONAL STOCK NUMBER	(4) PART NUMBER	(5) FSCM	(6) DESCRIPTION USABLE ON CODE	(7) U/M	(8) QTY INC IN UNIT
182	30	MFOZZ		820P435	27315	.TUBE ASSEMBLY,METAL TO XMSU CKT 312A,1/4"ODX.035X21.28LG....	EA	1
182		PAOZZ	9905-00-935-3863	MS39020-28	96906	..BAND,MARKER TUBE ASSY CKT 312A...........................	EA	2
182	31	XBOZZ		440243-01	27315	.TEE PIPE PIPE TO TUBE......................................	EA	1
182	32	XDOZZ		20U28-04	27315	.NIPPLE PIPE THD TEE FITTING................................	EA	1
182	33	XBOZZ		44047-06	27315	.FITTING FLARED TUBE 37 DEGREES 1-4 INCH..KT 312............	FA	1
182	34	MFOZZ		820P47603	27315	.TUBE ASSEMBLY,STEEL TO XMSN CKT 312D,1/4"ODX.035WALLX29.12LG	EA	1
182	35	XBOZZ	4730-01-023-2627	4404406	27315	.FITTING FLARED TUBE 37 DEGREES 1-4 INCH....................	EA	1
182	36	XDOZZ	5305-00-267-8972	MS90726-1	96906	.SCREW,CAP,HEXAGON 1-4-20 X 3-8 CLAMP.......................	FA	2
182	37	XDOZZ	5310-00-582-5965	MS35338-44	96906	.WASHER,LOCK 1-4 INCH CLAMP MTG.............................	EA	2
182	38	XDOZZ		32045C-098	27315	.CLAMP LOOP PLAIN 1-4 INCH TUBE MTG.........................	EA	2
182	39	MFOZZ		820N61	27315	.TUBE ASSEMBLY METAL TO XMSN CKT 312A.......................	EA	1
182		PAOZZ	9905-00-935-3863	MS39020-28	96906	..BAND,MARKER TUBE ASSY CKT 312A...........................	EA	2
182	40	XDOZZ	4730-01-023-2627	4404406	27315	.UNION PIPE TO TUBE FLARED TUBE 37 DEGREES 1-4 INCH CKT 312..	EA	1
182	41	MFOZZ		820N6603	27315	.TUBE ASSEMBLY 113 XMSN CKT 312B............................	EA	1
182		PAOZZ	9905-00-935-3863	MS35020-28	96906	..BAND,MARKER TUBE ASSY CKT 312B...........................	EA	2
182	43	XDOZZ	5310-00-045-3296	MS35338-43	96906	.WASHER,LOCK CLAMP MTG......................................	EA	1
182	44	XDOZZ		320449-032	27315	.CLAMP LOOP TUBE MTG 3-4 INCH...............................	EA	1
182	45	MFOZZ		44028703	27315	.HOSE ASSEMBLY TO XMSN DOUBLE WIPE BRAID....................	EA	1
182		PAOZZ	9905-00-935-7777	MS39020-29	96906	..BAND,MARKER HOSE ASSY CKT 312C...........................	EA	2
182		XBOZZ	4730-01-030-4339	C13215E7647-3	97403	..ADAPTER,STRAIGHT 1-4 INCH DIA CKT 312C...................	EA	1
182	46	XDOZZ	4730-00-187-0840	AN816-4	88044	.ADAPTER,STRAIGHT FLARED TUBE 1-4 INCH......................	EA	1
182	42	XDOZZ	5305-00-993-1848	MS35207-265	96906	.SCREW,MACHINE CLAMP MTG 10-24 X 3-4........................	EA	1
182	47	MFOZZ		820P435	27315	.TUBE ASSEMBLY,METAL XMSN CKT 315...........................	EA	1
182	48	XBOZZ	4730-00-187-0840	AN816-4	88044	.ADAPTER,STRAIGHT FLARED TUBE AND PIPE 1-4 INCH.............	EA	1
182	49	XBOZZ		44047-06	27315	.FITTING FLARED TUBE 37 DEGREES 1-4 INCH....................	FA	1
182	50	MFOZZ		820P47604	27315	.TUBE ASSEMBLY,STEEL XMSN CKT 315D,1/4"ODX.035WALLX30.63LG...	EA	1
182		PAOZZ	9905-00-935-3863	MS39C20-28	96906	..BAND,MARKER TUBE ASSY CKT 315D...........................	EA	2
182	51	XDOZZ	4730-01-023-2627	4404405	27315	.UNION PIPE TO TUBE FLARED TUBE CKT 315.....................	FA	1
182	52	XDOZZ	5305-00-267-8972	MS90726-1	96906	.SCREW,CAP,HEXAGON CLAMP MTG 1-4-20 X 3-8...................	FA	2
182	53	XDOZZ	5310-00-582-5965	MS35338-44	96906	.WASHER,LOCK CLAMP MTG 1-4 INCH.............................	EA	2
182	54	XDOZZ		32045C-098	27315	.CLAMP LOOP PLAIN 1-4 INCH TUBE MTG.........................	FA	2
182	55	MFOZZ		820N2404	27315	.TUBE ASSEMBLY,METAL TRANSMISSION CKT 315A..................	EA	1
182		PAOZZ	9905-00-935-3863	MS3902C-28	96906	..BAND,MARKER TUBE ASSY CKT 315A...........................	FA	2
182	56	XBOZZ	4730-01-023-2627	4404406	27315	.UNION PIPE TO TUBE FLARED TUBE CKT 315.....................	EA	1
182	57	MFOZZ		820N6604	27315	.TUBE ASSEMBLY 14 TRANSMISSION CKT 315B.....................	EA	1
182		PAOZZ	9905-00-935-3863	MS35C20-28	96906	..BAND,MARKER TUBE ASSY CKT 315B...........................	EA	2
182	58	MFOZZ		44028704	27315	.HOSE ASSEMBLY DOUBLE WIPE BRAID CKT 315C...................	EA	1
182		PAOZZ	9905-00-935-7777	MS35020-29	96906	..MARKER,BAND HOSE ASSY CKT 315C...........................	EA	1
182	59	XDOZZ	4730-00-187-0840	AN816-4	88044	.ADAPTER,STRAIGHT FLAIRED TUBE AND PIPE.....................	EA	1
182	60	MFOZZ		820P44	27315	.TUBE ASSY. PILOT TO CONTROL TEE CKT 304....................	EA	1

(1) ILLUSTRATION (a) FIG NO.	(b) ITEM NO.	(2) SMR CODE	(3) NATIONAL STOCK NUMBER	(4) PART NUMBER	(5) FSCM	(6) DESCRIPTION USABLE ON CODE	(7) U/M	(8) QTY INC IN UNIT
182		PAOZZ	9905-00-935-3863	MS39020-28	96906	..BAND,MARKER TUBE ASSY CKT 304	EA	2
182	61	XDOZZ	4730-00-883-8448	2062-6-6S	01276	.ELBOW,TUBE TO BOSS 90 DEGREE ELBOW	EA	1
182	62	PCOZZ	5330-00-804-5655	MS28778-6	96906	.PACKING PREFORMED TUBE FITTING BOSS	EA	1
182	63	MFOZZ		820P436	27315	.TUBE ASSEMBLY METAL FILTER RETURN LINE	EA	1
182		PAOZZ	9905-00-935-3863	MS39020-28	96906	..BAND,MARKER TUBE ASSY CKT 304A	EA	2
182	64	XDOZZ		440217-05	27315	.TEE TUBE SWIVEL NUT RUN 37 DEGREE FLARE	EA	1
182	65	XBOZZ		44047-D11	27315	.FITTING FLARED TUBE 37 DEGREES 3-8 INCH	EA	1
182	66	MFOZZ		820P48302	27315	.TUBE ASSEMBLY,STEEL FILTER RETURN CKT....E, 3/8"ODX.035WALLX32.25LG	EA	1
182		PAOZZ	9905-00-935-3863	MS39020-28	96906	..MARKER,BAND TUBE ASSY CKT 304E	EA	2
182	67	XDOZZ	4730-00-851-4384	44044D11	27315	.NIPPLE,TUBE FLARED TUBE 37 DEGREES 3-8	EA	1
182	68	XDOZZ	5305-00-267-8972	MS90726-1	96906	.SCREW,CAP,HEXAGON CLAMP MTG 1-4-20 X 3-8.CKT 304B	EA	2
182	69	XDOZZ	5310-00-582-5965	MS35338-44	96906	.WASHER,LOCK CLAMP MTG 1-4 INCH CKT 304B	EA	2
182	70	XDOZZ		320450-0100	27315	.CLAMP LOOP PLN TUBE MTG 3-8 INCH CKT 304B	EA	2
182	71	MFOZZ		820N2502	27315	.TUBE ASSEMBLY,STEEL FILTER RETURN CKT....B, 3/8"ODX.035WALLX81.875LG	EA	1
182		PAOZZ	9905-00-935-3863	MS39020-28	96906	..BAND,MARKER TUBE ASSY CKT 304B	EA	2
182	72	XDOZZ	4730-00-851-4384	44044D11	27315	.NIPPLE,TUBE FLARED TUBE CKT 304B	EA	2
182	73	XDOZZ	5305-00-993-1848	MS35207-265	96906	.SCREW MACHINE CLAMP MTG 10-24 X 3-4 CKTS.304C AND 313B	EA	1
182	74	XDOZZ	5310-00-045-3296	MS35338-43	96906	.WASHER,LOCK CLAMP MTG CKTS 304C AND 313B	EA	1
182	75	XDOZZ		320449-032	27315	.CLAMP LOOP TUBE MRG 3-4 INCH CKTS 304C...D 313B	EA	1
182	76	MFOZZ		820N31	27315	.TUBE ASSEMBLY,STEEL FILTER RETURN CKT....C, 3/8"ODX.035WALLX68.25LG	EA	1
182		PAOZZ	9905-00-935-3863	MS39020-28	96906	..BAND,MARKER TUBE ASSY CKT 304C	EA	2
182	77	MFOZZ		44028901	27315	.HOSE ASSEMBLY RETURN LINE CKT 304D	EA	1
182		PAOZZ	9905-00-935-7777	MS39020-29	96906	..BAND,MARKER HOSE ASSY CKT 304D	EA	2
182	78	XBOZZ	4730-00-231-4013	MS20822-6	96906	.ELBOW,PIPE TO TUBE TERMINATION CKT 304D	EA	1
182	79	MFOZZ		820P452	27315	.TUBE ASSEMBLY,METAL TO XMSN CKT 313, 1/4.DX.035WALLX22.62LG.	EA	1
182		PAOZZ	9905-00-935-3863	MS39020-28	96906	..BAND,MARKER TUBE ASSY CKT 313	EA	2
182	80	XDOZZ	4730-00-231-4009	MS20822-4	96906	.ELBOW,PIPE TO TUBE FLARED TUBE AND PIPE..HD 90 DEGREES 1-4 INCH CKT 313	EA	1
182	81	XBOZZ		44047-D6	27315	.FITTING FLARED TUBE 37 DEGREES 1-4 INCH..KT 313	EA	1
182	82	MFOZZ		820P47605	27315	.TUBE ASSEMBLY,STEEL XMSN RETURN CKT 313D, 1/4"ODX.035WALLX30.63LG	EA	1
182		PAOZZ	9905-00-935-3863	MS39020-28	96906	..BAND,MARKER TUBE ASSY CKT 313D	EA	2
182	83	XDOZZ	4730-01-023-2627	44044D6	27315	.UNION,PIPE TO TUBE FLARED TUBE CKT 313D	EA	1
182	84	XDOZZ	5305-00-267-8972	MS90726-1	96906	.SCREW,CAP,HEXAGON 1-4-20 X 3-8 CLAMP MTG	EA	2
182	85	XDOZZ	5310-00-582-5965	MS35338-44	96906	.WASHER,LOCK CLAMP MTG 1-4 INCH	EA	2
182	86	XDOZZ		320450-098	27315	.CLAMP LOOP PLAIN TUBE MTG	EA	2
182	87	MFOZZ		820N2405	27315	.TUBE ASSEMBLY,METAL TO XMSN CKT 313A	EA	1
182		PAOZZ	9905-00-935-3863	MS39020-28	96906	..BAND,MARKER TUBE ASSY CKT 313A	EA	2
182	88	XDOZZ	4730-01-023-2627	44044D6	27315	.UNION PIPE TO TUBE FLARED TUBE CKT 313A	EA	1

(1) ILLUSTRATION (a) FIG NO.	(b) ITEM NO.	(2) SMR CODE	(3) NATIONAL STOCK NUMBER	(4) PART NUMBER	(5) FSCM	(6) DESCRIPTION USABLE ON CODE	(7) U/M	(8) QTY INC IN UNIT
182	89	MFOZZ		820N38	27315	.TUBE ASSEMBLY 15 XMSN CKT 313B..............................	EA	1
182		PAOZZ	9905-00-935-3863	MS39020-28	96906	..BAND,MARKER TUBE ASSY CKT 313B............................	EA	2
182	90	MFOZZ		44Q28705	27315	.HOSE ASSEMBLY XMSN CKT 313C................................	EA	1
182		PAOZZ	9905-00-935-7777	MS39020-25	96906	..BAND,MARKER HOSE ASSY CKT 313C............................	EA	2
182	91	XDOZZ	4730-00-231-4009	MS20822-4	96906	.ELBOW,PIPE TO TUBE FLARED TUBE AND PIPE..HD 90 DEGREES CKT 313C..	EA	1
182	92	MFOZZ		820P451	27315	.TUBE ASSEMBLY,METAL REV GEAR CKT 316,1/4"ODX.035WALL.16.25LG	EA	1
182		PAOZZ	9905-00-935-3863	MS39020-28	96906	..BAND,MARKER TUBE ASSY CKT 316.............................	EA	2
182	93	XDOZZ	4730-00-187-0840	AN816-4	88044	.ADAPTER,STRAIGHT FLARED TUBE AND PIPE CK.316...............	EA	1
182	94	XBOZZ		44Q47-D6	88044	.NIPPLE FLAIRED TUVE TO PIPE CKT 316........................	EA	1
182		PAOZZ	9905-00-935-3863	MS39020-28	96906	..BAND,MARKER TUBE ASSY CKT 316D............................	EA	2
182	95	MFOZZ		1-820P476D1	27315	.TUBE ASSY,REVERSE GEAR CKT 316D............................	EA	1
182	96	XBOZZ		4044-D6	27315	.FITTING FLARED TUBE CKT 316D...............................	EA	1
182	97	XDOZZ	5305-00-267-8972	MS90726-1	96906	.SCREW,CAP,HEXAGON CLAMPING MRG 1-4-20......................	EA	2
182	98	XDOZZ	5310-00-582-5965	MS35338-44	96906	.WASHER,LOCK CLAMP MTG 1-4 INCH.............................	EA	2
182	99	XDOZZ		32Q450-D98	27315	.CLAMP LOOP PLAIN TUBE MTG..................................	EA	2
182	100	MFOZZ		820N24D1	27315	.TUBE ASSEMBLY 58 REV GEAR CKT 316A.........................	EA	1
182		PAOZZ	9905-00-935-3863	MS39020-28	96906	..BAND,MARKER TUBE ASSY CKT 316A............................	EA	2
182	101	XDOZZ	4730-01-023-2627	44Q44D6	27315	.UNION PIPE TO TUBE FLARED TUBE CKT 316A....................	EA	1
182	102	XDOZZ	5305-00-993-1948	MS35207-265	96906	.SCREW MACHINE VALVE MTG 1-4-20 X 1.........................	EA	1
182	103	XBOZZ	5310-00-045-3296	MS35338-43	96906	.WASHER,LOCK CLAMP MTG......................................	EA	1
182	105	MFOZZ		820N66D1	27315	.TUBE ASSEMBLY 10 REV GEAR CKT 316B.........................	EA	1
182		PAOZZ	9905-00-935-3863	MS39020-28	96906	..BAND,MARKER TUBE ASSY CKT 316B............................	EA	2
182	106	MFOZZ		44Q287D1	27315	.HOSE ASSEMBLY REV GEAR CKT 316C............................	EA	1
182		PAOZZ	9935-00-935-7777	MS39020-29	96906	..BAND,MARKER HOSE ASSY CKT 316C............................	EA	2
182	107	XDOZZ	4730-00-187-0840	AN816-4	88044	.ADAPTER,STRAIGHT FLARED TUBE CKT 316C......................	EA	1
182	108	MFOZZ		820P455	27315	.TUBE ASSEMBLY 13 FIRST GEAR CKT 311........................	EA	1
182		PAOZZ	9905-00-935-3863	MS39020-28	96906	..BAND,MARKER TUBE ASSY CKT 311.............................	EA	2
182	109	XDOZZ	4730-00-482-4136	MS39324-6-6	96906	.ADAPTER 37 DEGREE FLARE TO ZERO............................	EA	1
182	110	PCOZZ	5330-00-804-5655	MS28778-6	96906	.PACKING PREFORMED TUBE FITTING BOSS........................	EA	1
182	111	XBOZZ		44Q47-D6	27315	.FITTING FLARED TUBE CKT 311................................	EA	1
182	112	MFOZZ		820P476D2	27315	.TUBE ASSEMBLY,STEEL FIRST GEAR CKT 311D.. 1/4"ODX.035WALLX27.88LG..	EA	1
182		PAOZZ	9905-00-935-3863	MS39020-28	96906	..BAND,MARKER TUBE ASSY CKT 311D............................	EA	2
182	113	XDOZZ	4730-01-023-2627	44Q44D6	27315	.UNION PIPE TO TUBE FLARED TUBE CKT 311D....................	EA	1
182	114	XDOZZ	5305-00-267-8972	MS90726-1	96906	.SCREW,CAP,HEXAGON CLAMP MTG 1-4-20 X 3-8...................	EA	2
182	115	XDOZZ	5310-00-582-5965	MS35338-44	96906	.WASHER,LOCK CLAMP MTG 1-4 INCH.............................	EA	2
182	116	XDOZZ		32Q450-D98	27315	.CLAMP LOOP PLAIN TUBE MTG CKT 311A.........................	EA	2
182	117	MFOZZ		820N24D2	27315	.TUBE ASSEMBLY,METAL FIRST GEAR CKT 311A....................	EA	1
182		PAOZZ	9905-00-935-3863	MS39020-28	96906	..BAND,MARKER TUBE ASSY CKT 311A............................	EA	2
182	118	XDOZZ	4730-01-023-2627	44Q44D6	27315	.UNION PIPE TO TUBE FLARED TUBE CKT 311B....................	EA	1
182	119	MFOZZ		820N66D2	27315	.TUBE ASSEMBLY 11 FIRST GEAR CKT 311B.......................	EA	1
182		PAOZZ	9905-00-935-3863	MS39020-28	96906	..BAND,MARKER TUBE ASSY CKT 311B............................	EA	2

(1) ILLUSTRATION (a) FIG NO.	(b) ITEM NO.	(2) SMR CODE	(3) NATIONAL STOCK NUMBER	(4) PART NUMBER	(5) FSCM	(6) DESCRIPTION USABLE ON CODE	(7) U/M	(8) QTY INC IN UNIT
182	120	MFOZZ		440287D2	27315	.HOSE ASSEMBLY FIRST GEAR CKT 311C............................	EA	1
182		PAOZZ	9905-00-935-7777	MS39020-29	96906	..BAND,MARKER HOSE ASSY CKT 311C..............................	EA	2
182	121	XDOZZ	4730-00-187-0840	AN816-4	88044	.ADAPTER,STRAIGHT FLARED TUBE CKT 311C........................	EA	1
182	122	MFOZZ		820P433	27315	.TUBE ASSEMBLY TORQUE CONVERTER LOCKUP CKT 317, 3/8"ODX.035WALLX22.25LG....................................	EA	1
182		PAOZZ	9905-00-935-3863	MS39020-28	96906	..BAND,MARKER TUBE ASSY CKT 317...............................	EA	2
182	123	XDOZZ	4730-00-231-4013	MS20822-6	96906	.ELBOW,PIPE TO TUBE 90 DEGREES TUBE AND.......................	EA	1
182	124	XBOZZ		44047-D11	27315	.FITTING FLARED TUBE CKT 317..................................	EA	1
182	125	MFOZZ		820P483D1	27315	.TUBE ASSEMBLY,STEEL TORQUE CONVERTER.....OUT CKT 317D, 3/8"ODX.035WALLX28.88LG....................................	EA	1
182		PAOZZ	9905-00-935-3863	MS39020-28	96906	..BAND,MARKER TUBE ASSY CKT 317D..............................	EA	2
182	126	XDOZZ	4730-00-851-4384	44044D11	27315	.NIPPLE,TUBE FLARED TUBE CKT 317D.............................	EA	1
182	127	XDOZZ	5305-00-267-8572	MS90726-1	96906	.SCREW,CAP,HEXAGON CLAMP MTG 1-4-20 X 3-8.....................	EA	2
182	128	XDOZZ	5310-00-582-5965	MS35338-44	96906	.WASHER,LOCK CLAMP MTG 1-4 INCH...............................	EA	2
182	129	XDOZZ		320450-0100	27315	.CLAMP LOOP PLAIN TUBE MTG CKT 317A...........................	EA	2
182	130	MFOZZ		820N25D2	27315	.TUBE ASSEMBLY,STEEL TORQUE CONVERTER.....OUT CKT 317A, 3/8"ODX.035WALLX83.875LG...................................	EA	1
182		PAOZZ	9905-00-935-3863	MS39020-28	96906	..BAND,MARKER TUBE ASSY CKT 317A..............................	EA	2
182	131	XDOZZ	4730-00-851-4384	44044D11	27315	.NIPPLE,TUBE FLARE TUBE CKT 317A..............................	EA	1
182	132	MFOZZ		820P479	27315	.TUBE ASSEMBLY,STEEL TORQUE CONVERTER.....OUT CKT 317B, 3/8"ODX.035WALLX47.00LG....................................	EA	1
182	133	MFOZZ		440288	27315	.HOSE ASSY 44 TORQUE CONVERTER LOCKOUT CKTCKT 317C............	EA	1
182	134	XDOZZ	4730-00-194-1121	AN816-6	88044	.ADAPER,STRAIGHT FLARED TUBE AND PIPE CKT.317C................	EA	1
182	135	XDOZZ		442536-D4	27315	.FITTING FLARED TUBE..	EA	1
182	136	PCOZZ	5330-00-804-5695	MS28778-6	96906	.PACKING PREFORMED STRAIGHT THREAD TUBE.......................	EA	1
182	137	XDOZZ	5310-00-905-0762	MS51967-3	96906	.NUT PLAIN HEXAGON VALVE MTG 1-4-20...........................	EA	2
182	138	XDOZZ	5310-00-582-5965	MS35338-44	96906	.WASHER,LOCK VALVE MTG 1-4 INCH...............................	EA	2
182	139	XDOZZ	5305-00-225-3839	MS90725-8	96906	.SCREW CAP HEXAGON..	EA	2
182	140	XDOZZ		13217E3151	97403	.VALVE SUBPLATE TORQUE CONVERTER AND XMSN.PIPING..............	EA	1
182	141	MFOZZ		440268D1	27315	.HOSE ASSEMBLY COOLER TO XMSN CKT 301.........................	EA	1
182		PAOZZ	9905-00-258-1441	MS35020-30	96906	..BAND,MARKER HOSE ASSY CKT 301...............................	EA	2
182	142	XDOZZ	4730-00-231-3019	MS20822-16	96906	.ELBOW,PIPE TO TUBE FLARED TUBE AND PIPE......................	EA	1
182	143	XDOZZ		509-014	27315	.BUSHING PIPE STEEL CKT 301...................................	EA	1
182	144	XDOZZ		440224-027	27315	.ADAPTER TUBE 37 DEGREE FLARE TO ZERO RING BOSS CKT 301......	EA	1
182	145	PCOZZ	5330-00-804-5654	MS28778-16	96906	.PACKING,PREFORMED ADAPTER CKT 301............................	EA	1
182	146	MFOZZ		440267	27315	.HOSE ASSEMBLY 70 TORQUE CONVERTER TO.....	EA	1
182		PAOZZ	9905-00-258-1441	MS35020-30	96906	..BAND,MARKER HOSE ASSY CKT 306...............................	EA	2
182	147	XBOZZ	4730-00-231-3940	MS20823-16	96906	.ELBOW,PIPE TO TUBE PIPE TO TUBE 45...........................	EA	1
182	148	XDOZZ		509-014	27315	.BUSHING TUBE CONNECTION CKT 306..............................	EA	1
182	149	XBOZZ		440224-028	27315	.ADAPTER TUBE HOSE CONNECTION CKT 306.........................	EA	1
182	150	PAOZZ	5330-00-916-3546	MS28778-20	96906	.PACKING PREFORMED HOSE CONNECTION CKT 306....................	EA	1
182	151	MFOZZ		440280	27315	.HOSE ASSEMBLY 56 OIL FILTER TO ENGINE........................	EA	1

(1) ILLUSTRATION (a) FIG NO.	(b) ITEM NO.	(2) SMR CODE	(3) NATIONAL STOCK NUMBER	(4) PART NUMBER	(5) FSCM	(6) DESCRIPTION USABLE ON CODE	(7) U/M	(8) QTY INC IN UNIT
182		PAOZZ	9905-00-935-7777	MS39020-25	96906	..BAND,MARKER HOSE ASSY CKT 327A	EA	2
182		PAOZZ	4730-00-472-2611	MS39290-12-128	96906	..ADAPTER,STRAIGHT HOSE ASSY CKT 327A	EA	2
182	152	XBOZZ	4730-00-187-0846	AN816-12-16	88044	.ADAPTER,STRAIGHT,PI FLARED TUBE AND PIPE,THD CKT 327A	EA	1
182	153	XDOZZ		440240-06	27315	.TEE PIPE ENGINE COOLER CKT 327A	EA	1
182	154	XDOZZ		20067-017	27315	.PLUG PIPE HEX ENGINE COOLER TEE CKT 327A	EA	1
182	155	XDOZZ		20U28-0105	27315	.NIPPLE PIPE THREAD ENGINE COOLER TEE CKT.327A	EA	1
182	156	XBOZZ	4730-00-278-0601	MS20822-12-16	96906	.ELBOW,PIPE TO TUBE FLARED TUBE AND PIPE..HD CKT 327A	EA	1
182	157	MFOZZ		440280	27315	.HOSE ASSEMBLY 65 ENGINE OIL COOLER	EA	1
182		PAOZZ	9905-00-935-7777	MS39020-29	96906	..BAND MARKER HOSE ASSY CKT 327B	EA	2
182		PAOZZ	4730-00-472-2611	MS35290-12-128	96906	..ADAPTER,STRAIGHT HOSE ASSY CKT 327B	EA	2
182	158	XBOZZ	4730-00-278-0601	MS20822-12-16	96906	.ELBOW,PIPE TO TUBE FLARED TUBE AND PIPE	EA	1
182	159	XDOZZ		20U28-0105	27315	.NIPPLE PIPE THREAD 1 INCH DIA X 4 INCH CKT 327B	EA	1
182	160	XDOZZ	4730-01-029-0172	20067017	27315	.PLUG PIPE HEX OUTSIDE HEAD CKT 327B	EA	1
182	161	XDOZZ		440240-06	27315	.TEE PIPE HOSE CONNECTION CKT 327B	EA	1
182	162	MFOZZ		44028C05	27315	.TUBE ASSY ENGINE TO FILTER CKT 327C,3/4..DX.065 WALL	EA	1
182		PAOZZ	9905-00-935-7777	MS39020-29	96906	..BAND,MARKER HOSE ASSY CKT 327C	EA	1
182		PAOZZ	4730-00-472-2611	MS39290-12-128	96906	..ADAPTER,STRAIGHT 3-4 INCH NOM CKT 327C	EA	2
182	163	XDOZZ	4730-00-278-3209	816427	02280	.NIPPLE,TUBE HOSE CONNECTION CKT 327C 3-4.INCH	EA	1
182	164	XDOZZ	4730-00-231-3964	MS20823-12	96906	.ELBOW PIPE TO TUBE 45 DEGREES CKT 327C	EA	1
182	165	XDOZZ		509-010	27315	.BUSHING PIPE HOSE CONNECTION CKT 327C	EA	1
182	166	XDOZZ	4820-00-878-3426	A727T	01029	.VALVE BALL OIL FILTER OUTLET CKT 327C	EA	1
182	167	XDOZZ	4730-00-289-0163	44023906	27315	.ELBOW,PIPE PIPE STREET 90 DEGREES CKT	EA	1
182	168	XDOZZ		440241-06	27315	.NIPPLE PIPE STEEL HOSE MRG CKT 327C	EA	1
182	169	MFOZZ		44028C06	27315	.HOSE ASSY ENGINE TO FILTER CKT 326,3/4...X.049WALL	EA	1
182		PAOZZ	9905-00-935-7777	MS39020-25	96906	..BAND,MARKER HOSE ASSY CKT 326	EA	2
182		XBOZZ	4730-00-472-2611	MS39290-12-128	96906	..ADAPTER,STRAIGHT HOSE ASSY CKT 326	EA	2
182	170	XBOZZ	4730-00-278-3208	816427	02280	.NIPPLE,TUBE FLARED TUBE 3-4 INCH CKT 326	EA	1
182	171	XBOZZ	4730-00-278-0601	MS20822-12-16	96906	.ELBOW,PIPE TO TUBE FLARED TUBE 90 DEGREES CKT 326	EA	1
182	172	XDOZZ	5305-00-045-1988	MS90725-87	96906	.SCREW,CAP,HEXAGON FILTER COVER MTG	EA	6
182	173	XDOZZ	5310-00-209-0965	MS35338-47	96906	.WASHER,LOCK FILTER COVER MTF 7-16 INCH	EA	1
182	174	XDOZZ		20067-017	27315	.PLUG PIPE HEXAGON OUTSIDE HD FILTER DRAIN	EA	1
182	175	MFOZZ		440265	27315	.HOSE ASSEMBLY 75 XMSN TO TORQUE CONVERTER CKT 305	EA	1
182		PAOZZ	9905-00-259-1441	MS35020-30	96906	..BAND,MARKER HOSE ASSY CKT 305	EA	2
182		XBOZZ	4730-01-025-7243	13215E7638-5	97403	..ELBOW,TUBE TO HOSE HOSE ASSY CKT 305	EA	2
182	176	XBOZZ		440224-027	27315	.ADAPTER TUBE HOSE CONNECTION CKT 305	EA	1
182	177	PCOZZ	5330-00-804-5694	MS28778-16	96906	.PACKING,PREFORMED HOSE CONNECTION CKT 305	EA	1
182	178	XDOZZ		440224-028	27315	.ADAPTER TUBE HOSE CONNECTION CKT 305	EA	1
182	179	PAOZZ	5330-00-816-3546	MS28778-20	96906	.PACKING PREFORMED ADAPTER CKT 305	EA	1
182	180	MFOZZ		440205	27315	.HOSE HYDRAULIC XMSN TO PUMP CKT 337	EA	1
182		XBOZZ		13215E7653-5	97403	..FITTING SPLIT FLANGE 60 DEGREE ELBOW CKT307	EA	1

(1) ILLUSTRATION (a) FIG NO.	(b) ITEM NO.	(2) SMR CODE	(3) NATIONAL STOCK NUMBER	(4) PART NUMBER	(5) FSCM	(6) DESCRIPTION USABLE ON CODE	(7) U/M	(8) QTY INC IN UNIT
182		PADZZ	9905-00-935-7777	MS39020-29	96906	..MARKER,BAND HYDRAULIC HOSE ASSY CKT 307.....................	EA	2
182	181	XBDZZ	4730-01-042-5252	MS39296-248	96906	.CONNECTOR,HOSE FLANGE TO PORT HYD HOSE...UPLING SPLIT FLANGE CKT 307..	EA	1
182	182	XBDZZ	4730-01-026-8720	MS35256-2C8	96906	.CONNECTOR,SWIVEL HYD HOSE COUPLING FLANGE TO PORT SPLIT FLANGE CKT 307...	EA	1
182		XDDZZ		20070-03	27315	.COUPLING PIPE XMSN BREATHER..............................	EA	1
182	184	XDDZZ		20U29-037	27315	.NIPPLE PIPE THREAD XMSN BREATHER.........................	EA	1

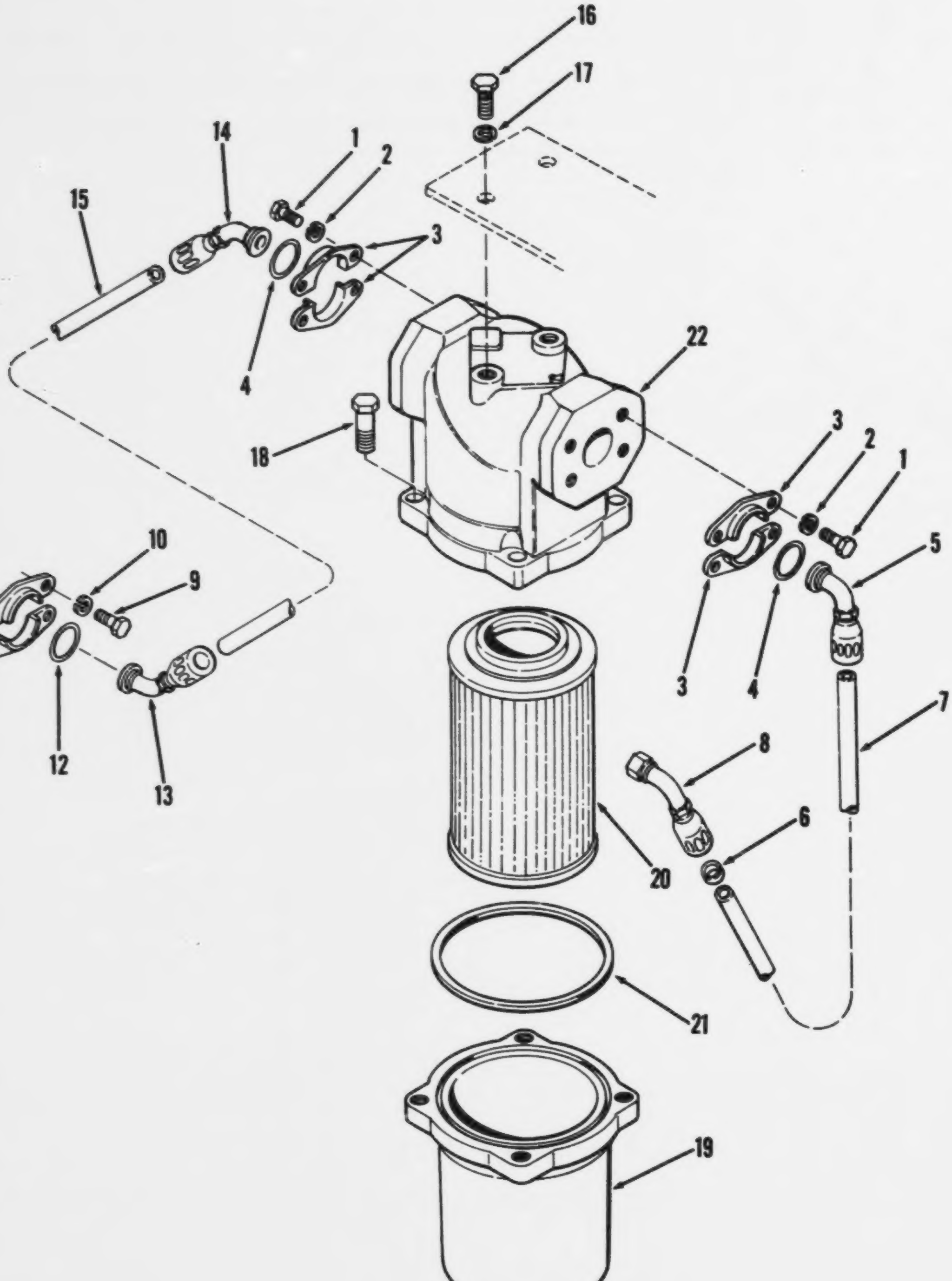

Figure 184. Filter and hose assemblies

(1) ILLUSTRATION (a) FIG NO.	(b) ITEM NO.	(2) SMR CODE	(3) NATIONAL STOCK NUMBER	(4) PART NUMBER	(5) FSCM	(6) DESCRIPTION USABLE ON CODE	(7) U/M	(8) QTY INC IN UNIT
						FUNCTIONAL GROUP 58 TORQUE CONVERTER AND TRANSMISSION HOSE AND TUBE ASSEMBLIES		
184		MOOZZ	4730-01-026-8720	MS2525/17-20	81349	.CONNECTOR FLANGE HOSE FILTER	EA	2
184	1	PAOZZ	5305-00-050-1076	MS90725-89	96906	..SCREW,CAP,HEXAGON 7-16-14X1-1-2 FLANGE	EA	8
184	2	PAOZZ	5310-00-209-0965	MS35338-47	96906	..WASHER,LOCK 7-16 FLANGE	EA	8
184	3	PAOZZ	4730-00-255-0560	MS39294-20	96906	..CLAMP FLANGE HOSE CONNECTION	EA	4
184	4	PCOZZ	5330-00-198-6190	AN6227-27	81168	..PACKING PREFORMED CLAMP	EA	2
184		PCOZZ	4720-01-028-5282	4402640I	27315	.HOSE ASSEMBLY FILTER TO CONVERTER	EA	1
184	5	XAOZZ		94-4750-20-16	00624	..FITTING HOSE FLANGED	EA	1
184	6	XAOZZ		RK16-16NJ45T	30327	..FITTING HOSE CONVERTER	EA	1
184	7	XAOZZ		MIL-H-52471/5-16	81349	..HOSE RUBBER 1 ID FILTER TO CONVERTER	FT	1
184	8	XBOZZ	4730-00-683-8438	16C50XS	30780	.ELBOW,TUBE TO BOSS CONVERTER	EA	1
184		PAOZZ		MS39296-16B	96906	.CONNECTOR FLANGE FILTER TO PUMP	EA	1
184	9	XBOZZ	5305-00-269-3213	MS90725-62	96906	..SCREW,CAP,HEXAGON 3-8-16X1-1-4 FLANGE	EA	4
184	10	XBOZZ	5310-00-637-9541	MS35338-46	96906	..WASHER,LOCK 3-8 FLANGE	EA	4
184	11	XBOZZ	4730-00-755-7609	MS39294-16	96906	..FLANGE HALF CONNECTOR	EA	2
184	12	PCOZZ	5330-00-531-3422	AN6227-27	88044	..PACKING,PREFORMED CONNECTOR	EA	1
184		PCOZZ	4710-00-240-5621	13216E7862-1	97403	.TUBE ASSEMBLY,METAL FILTER TO PUMP	EA	1
184	13	XAOZZ		94-4750-20-16	00624	..FITTING HOSE FLANGED AT PUMP	EA	1
184	14	XAOZZ		94-4745-16	00624	..FITTING HOSE FLANGED AT FILTER	EA	1
184	15	XAOZZ		MS39263-16	96906	..HOSE RUBBER 1 ID FILTER TO PUMP	FT	1
184	16	XBOZZ	5305-00-071-1766	MS90725-108	96906	.SCREW,CAP,HEXAGON 1-2-13X7-8 FILTER	EA	2
184	17	XBOZZ	5310-00-754-2005	MS35338-52	96906	.WASHER,LOCK 1/2 FILTER MOUNTING	EA	2
184		XBOZZ		M2933	92863	.FILTER ASSY CONVERTER OIL	EA	1
184	18	PAOZZ		M2933-8	92863	..SCREW CAP HEXAGON FILTER HEAD	EA	4
184	19	XAOZZ		M2933-1	92863	..HOUSING ELEMENT FILTER	EA	1
184	20	PAOZZ		M2933-511CK	92863	..ELEMENT FILTER CONVERTOR OIL	EA	1
184	21	XDOZZ	5330-00-143-8463	25060-3	92863	..SEAL HOUSING FILTER	EA	1
184	22	XAOZZ		M2933-2000-2	92863	..HEAD ASSEMBLY FILTER INCL BYPASS VALVE	EA	1
184	23	XDOZZ		M2933-4	92863	..PLUG PIPE 3-8NPT SQ HD FILTER DRAIN	EA	1

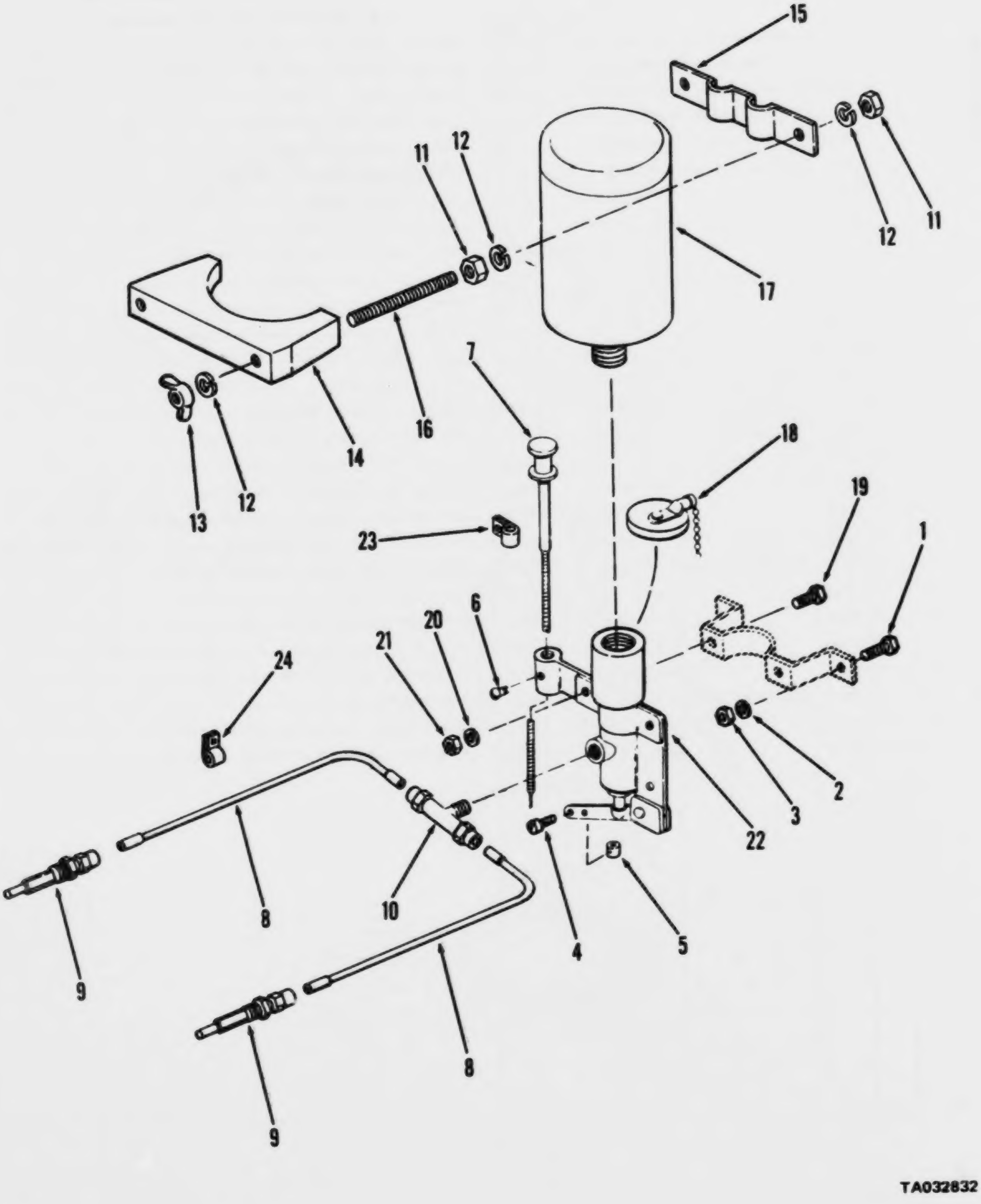

Figure 185. Starting assembly, quick

(1) ILLUSTRATION (a) FIG NO	(b) ITEM NO	(2) SMR CODE	(3) NATIONAL STOCK NUMBER	(4) PART NUMBER	(5) FSCM	(6) DESCRIPTION USABLE ON CODE	(7) U/M	(8) QTY INC IN UNIT
						FUNCTIONAL GROUP 58 TORQUE CONVERTER AND TRANSMISSION HOSE AND TUBE ASSEMBLIES		
185	1	XBOZZ	5305-00-068-0498	MS90725-1	96906	.SCREW,CAP,HEXAGON 1-4-20X3-8 CYLINDER	EA	2
185	2	XBOZZ	5310-00-582-5965	MS35338-44	96906	.WASHER,LOCK 1-4 CYLINDER	EA	2
185	3	XBOZZ	5310-00-761-6882	MS51967-2	96906	.NUT,PLAIN,HEXAGON 1-4-20 CYLINDER	EA	2
185		XDOZZ		OS3267-370	61112	.STARTING ASSEMBLY ETHER CARRIER	EA	1
185		PAOZZ	2990-00-633-5903	LP2814	61112	..STOP,SCREW ASSEMBLY CABLE	EA	1
185	4	XAOZZ		LP4668-10	61112	...SCREW MACHINE STOP	EA	1
185	5	XAOZZ		LP4667-10	61112	...STOP CABLE STARTING AID	EA	1
185	6	XAOZZ		LP529	61112	..SCREW MACHINE CONTROL CABLE	EA	1
185		PAOZZ	3040-00-921-6412	LP3864884	61112	..CONTROL ASSEMBLY STARTING AID	EA	1
185	9	XDOZZ		LP2377-10	61112	..ATOMIZER ETHER MANIFOLD	EA	2
185		XDOZZ	5340-00-420-9813	LP2295	61112	..CLAMP ASSEMBLY CYLINDER	EA	1
185	11	XDOZZ	5310-00-487-5330	LP2288	61112	...NUT,PLAIN,HEXAGON CLAMP	EA	4
185	12	XAOZZ		LP2285	61112	...WASHER LOCK CLAMP	EA	6
185	13	XAOZZ		LP2290	61112	...NUT WING CLAMP	EA	2
185	14	XAOZZ		LP3904-1	61112	...BRACKET CLAMP CYLINDER	EA	1
185	15	XAOZZ		LP2284	61112	...PLATE CLAMP CYLINDER	EA	1
185	16	XAOZZ		LP2287	61112	...STUD CLAMP CYLINDER	EA	2
185	17	PAOZZ	2910-00-646-5727	MS39254	96906	..CARTRIDGE,ENGINE ST STARTING AID	EA	1
185		XDOZZ		LP3234-9	61112	..VALVE ASSEMBLY STARTING AID	EA	1
185	18	XAOZZ		LP2401	61112	...CAP ASSEMBLY VALVE	EA	1
185	19	XAOZZ		LP1268	61112	...SCREW CAP HEXAGON BRACKET	EA	2
185	20	XAOZZ		T410	61112	...WASHER LOCK BRACKET	EA	2
185	21	XAOZZ		T409-1	61112	...NUT PLAIN HEXAGON BRACKET	EA	2
185	22	XAOZZ		LP3258-1	61112	...VALVE START AID ENGINE	EA	1
185	23	PAOZZ	5340-00-990-7610	MS21333-66	96906	.CLAMP,LOOP CUSHIONED CONTROL CABLE	EA	1
185	24	PAOZZ	5340-00-088-1255	MS21333-56	96906	.CLAMP LOOP CUSHIONED TUBE	EA	2

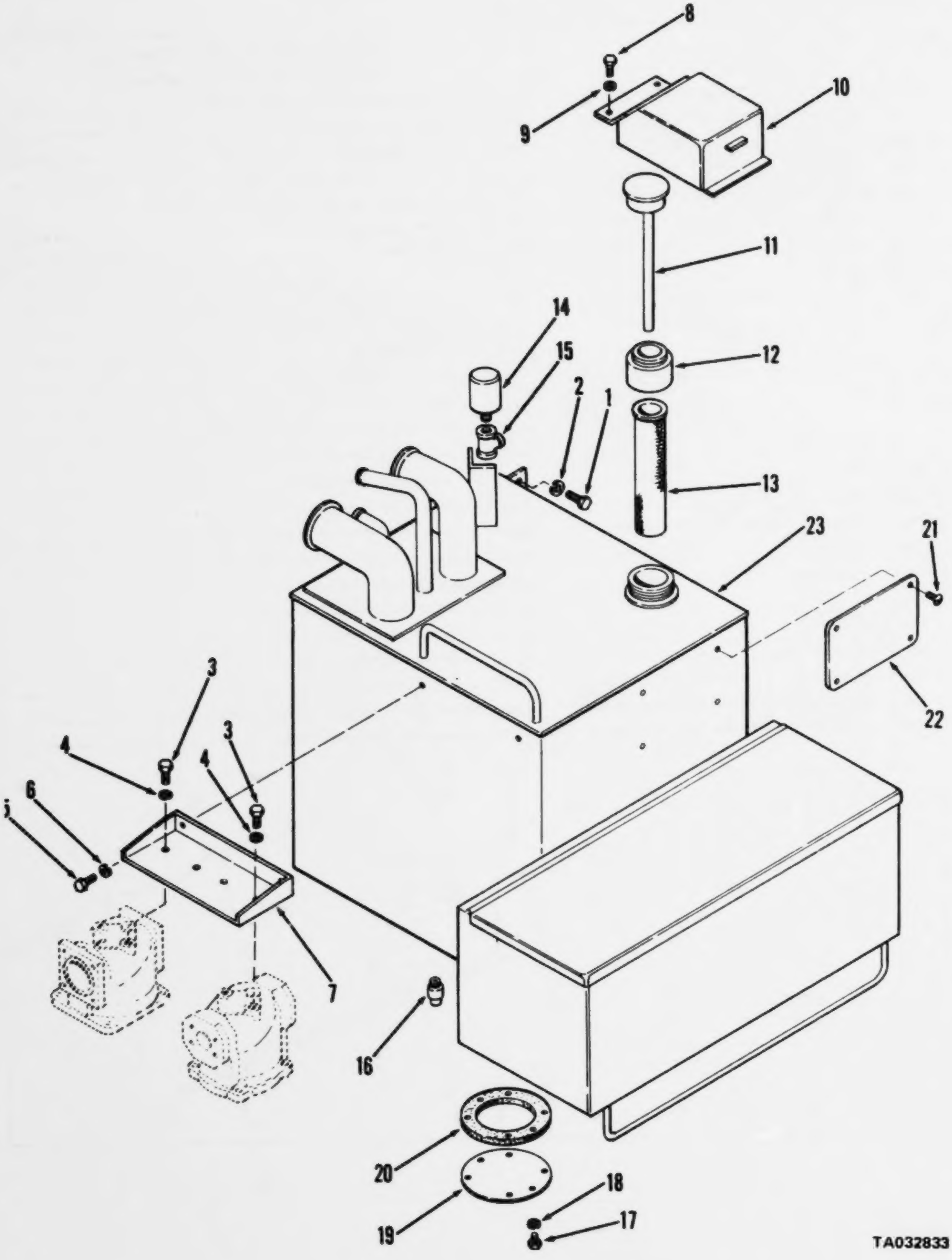

Figure 186. Tank assembly, hydraulic

(1) ILLUSTRATION		(2)	(3)	(4)	(5)	(6)	(7)	(8)
(a) FIG NO.	(b) ITEM NO.	SMR CODE	NATIONAL STOCK NUMBER	PART NUMBER	FSCM	DESCRIPTION USABLE ON CODE	U/M	QTY INC IN UNIT
						FUNCTIONAL GROUP 59 TORQUE CONVERTER AND TRANSMISSION HOSE AND TUBE ASSEMBLIES		
186	3	XBOZZ	5305-00-782-9455	MS90725-111	96906	.SCREW CAP HEXAGON 1/2-13X1-1/4 FILTER MTG....................	EA	4
186	4	XBOZZ	5310-00-584-5272	MS35338-48	96906	.WASHER,LOCK 1/2 FILTER MTG.................................	EA	4
186	9	XBOZZ	5310-00-582-5965	MS35338-44	96906	..WASHER,LOCK 1/4 COVER MTG.................................	EA	2
186	10	XDOZZ		927A606	27315	..COVER FILLER CAP HYDRAULIC TANK...........................	EA	1
186	11	PBOZZ	6680-00-445-4581	13213E9434	97403	..CAP HYDRAULIC TANK CARRIER................................	EA	1
186	12	XBOZZ		4110-1	10203	..NECK FILLER HYD TANK......................................	EA	1
186	13	PAOZZ	2520-00-401-7139	13213E9403	97403	..STRAINER FILL HYDR TANK...................................	EA	1
186	14	XDOZZ		13205E3466	97403	..VALVE FILTER RELIEF HYDR TANK.............................	EA	1
186	15	XDOZZ		949CV304	27315	..TEE STREET PIPE 1/2 TANK TO VALVE.........................	EA	1
186	16	PAOZZ		13213E9572	97403	..PLUG ASSEMBLY HYDRAULIC TANK..............................	EA	1
186	17	XBOZZ	5305-00-269-2802	MS90726-59	96906	..SCREW,CAP,HEXAGON 3/8-24X7/8 COVER MTG....................	EA	6
186	18	XBOZZ	5310-00-543-5101	MS35338-27	96906	..WASHER,LOCK 3/8 COVER MTG.................................	EA	6
186	19	XDOZZ		814820	27315	..COVER TANK..	EA	1
186	20	FBOZZ	5330-00-585-8249	MS28775-246	96906	..PACKING PREFORMED COVER...................................	EA	1
186	21	XBOZZ	5305-00-175-3230	MS21318-14	96906	..SCREW,DRIVE NO.2-8X1/8 PLATE MTG..........................	EA	4
186	22	XBOZZ		320465	27315	..PLATE INSTRUCTION HYDRAULIC TANK..........................	EA	1

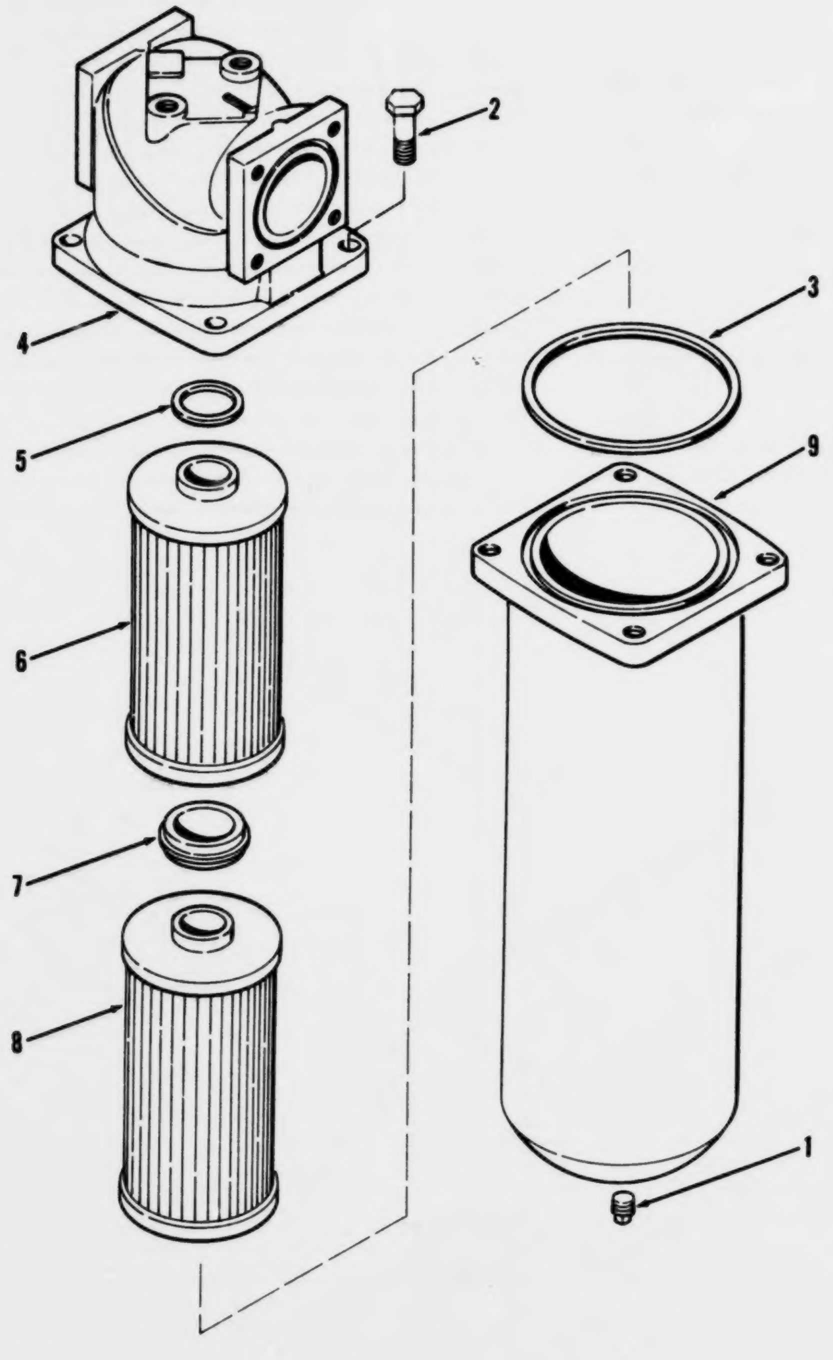

Figure 187. Filter assembly, hydraulic oil

(1) ILLUSTRATION (a) FIG NO.	(b) ITEM NO.	(2) SMR CODE	(3) NATIONAL STOCK NUMBER	(4) PART NUMBER	(5) FSCM	(6) DESCRIPTION USABLE ON CODE	(7) U/M	(8) QTY INC IN UNIT
						FUNCTIONAL GROUP 58 TORQUE CONVERTER AND TRANSMISSION HOSE AND TUBE ASSEMBLIES		
187		XBOZZ		26900-2500-	92863	.FILTER OIL HYD TANK FILTER SYSTEM.........................	EA	1
187	1	XDOZZ		26900-2500-6	92863	..PLUG DRAIN HYD TANK FILTER................................	EA	1
187	2	XDOZZ		26900-2500-7	92863	..BOLT HEAD HYD TANK FILTER.................................	EA	1
187	3	KFOZZ		26900-2500-5	92863	..SEAL HOUSING HYD TANK FILTER..............................	EA	1
187	4	XDOZZ		26900-2500-2	92863	..HEAD FILTER HYD TANK FILTER SYSTEM........................	EA	1
187	5	KFOZZ		26900-2500	92863	..PACKING PREFORMED HYD TANK FILTER.........................	EA	1
187	6	PAOZZ	2520-00-132-3158	26900-2500	92863	..FILTER ELEMENT DOUBLE PORT-HYD TANK.......................	EA	1
187	7	XDOZZ		26900-2500-8	92863	..SLEEVE ELEMENT HYD TANK FILTER............................	EA	1
187	8	PAOZZ	4330-00-329-5339	676366-5110	92863	..FILTER,ELEMENT HYD TANK FILTER............................	EA	1
187	9	XDOZZ		26900-2500-1	92863	..HOUSING FILTER HYD TANK FILTER............................	EA	1

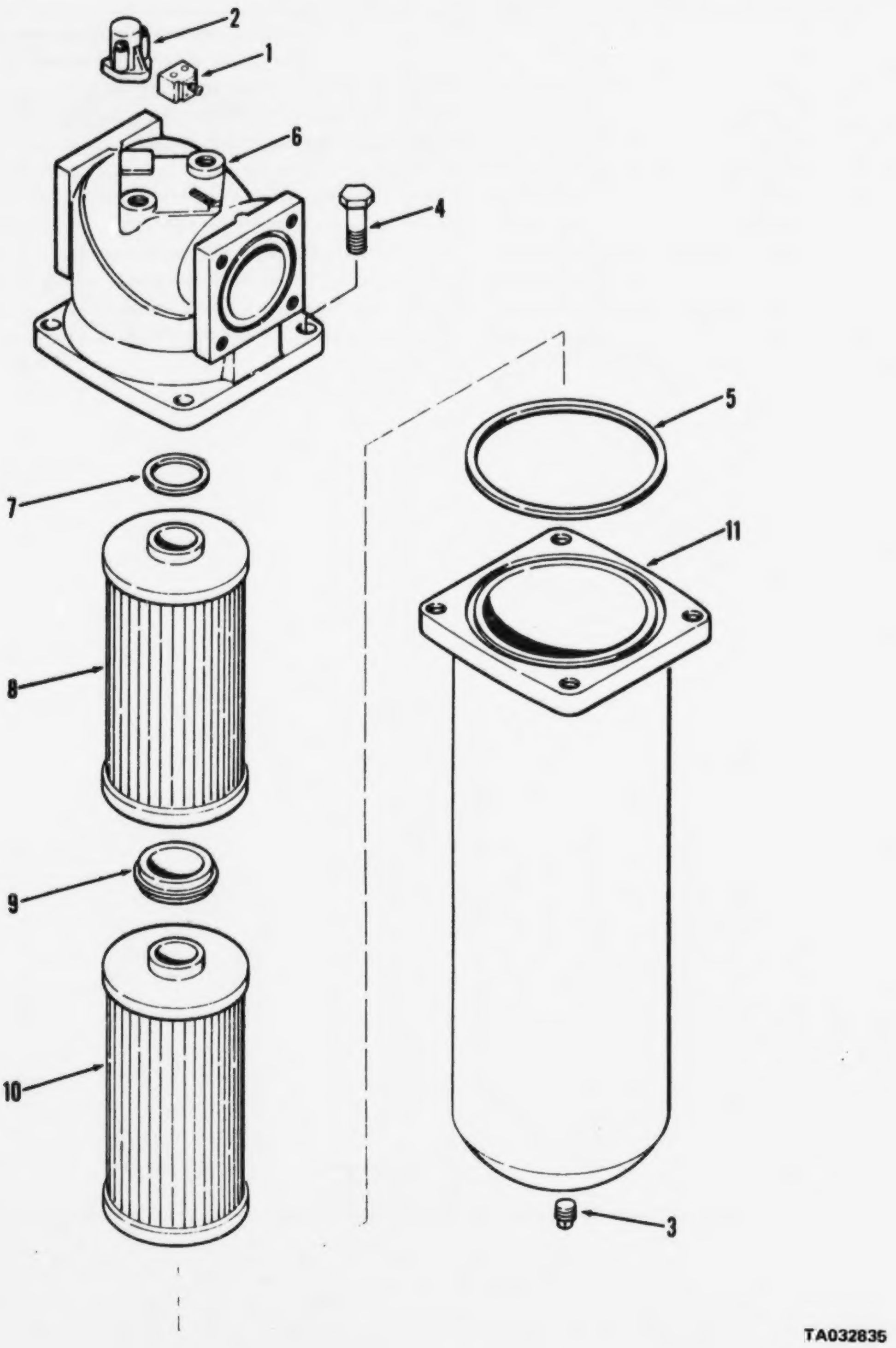

Figure 188. Filter assembly, hydraulic oil

(1) ILLUSTRATION (a) FIG NO.	(b) ITEM NO.	(2) SMR CODE	(3) NATIONAL STOCK NUMBER	(4) PART NUMBER	(5) FSCM	(6) DESCRIPTION USABLE ON CODE	(7) U/M	(8) QTY INC IN UNIT
						FUNCTIONAL GROUP 58 TORQUE CONVERTER AND TRANSMISSION HOSE AND TUBE ASSEMBLIES		
188	1	XDOZZ		MEC404-2500	92863	.SWITCH FILTER HYD OIL FILTER..............................	EA	1
188	2	PAOZZ	6680-00-041-3658	9C9220-25	92863	..INDICATOR FLUID COLORGAGE..............................	EA	1
188	3	XBOZZ		269C0C2500-6	92863	..PLUG DRAIN HYD FILTER..............................	EA	1
188	4	XDOZZ		26900C2500-7	92863	..BOLT HEAD HYD TANK FILTER..............................	EA	1
188	5	KFOZZ		26900C2500-5	92863	..SEAL HOUSING HYD FILTER..............................	EA	1
188	6	XAOZZ		269C0C2500-2	92863	..HEAD FILTER HYD TANK FILTER..............................	EA	1
188	7	KFOZZ		269C0C2500-4	92863	..PACKING PREFORMED HYD TANK FILTER..............................	EA	1
188	8	PAOZZ	2940-00-421-9655	576366-5110	92863	..FILTER ELEMENT DOUBLE PORT-HYD TANK..	EA	1
188	9	XDOZZ		26900C2500-8	92863	..SLEEVE ELEMENT HYD TANK FILTER..............................	EA	1
188	10	PAOZZ	4330-00-328-5339	676366-5110	92863	..FILTER ELEMENT HYD TANK FILTER..............................	EA	1
188	11	XAOZZ		269C0C2500-1	92863	..HOUSING FILTER HYD TANK FILTER..............................	EA	1

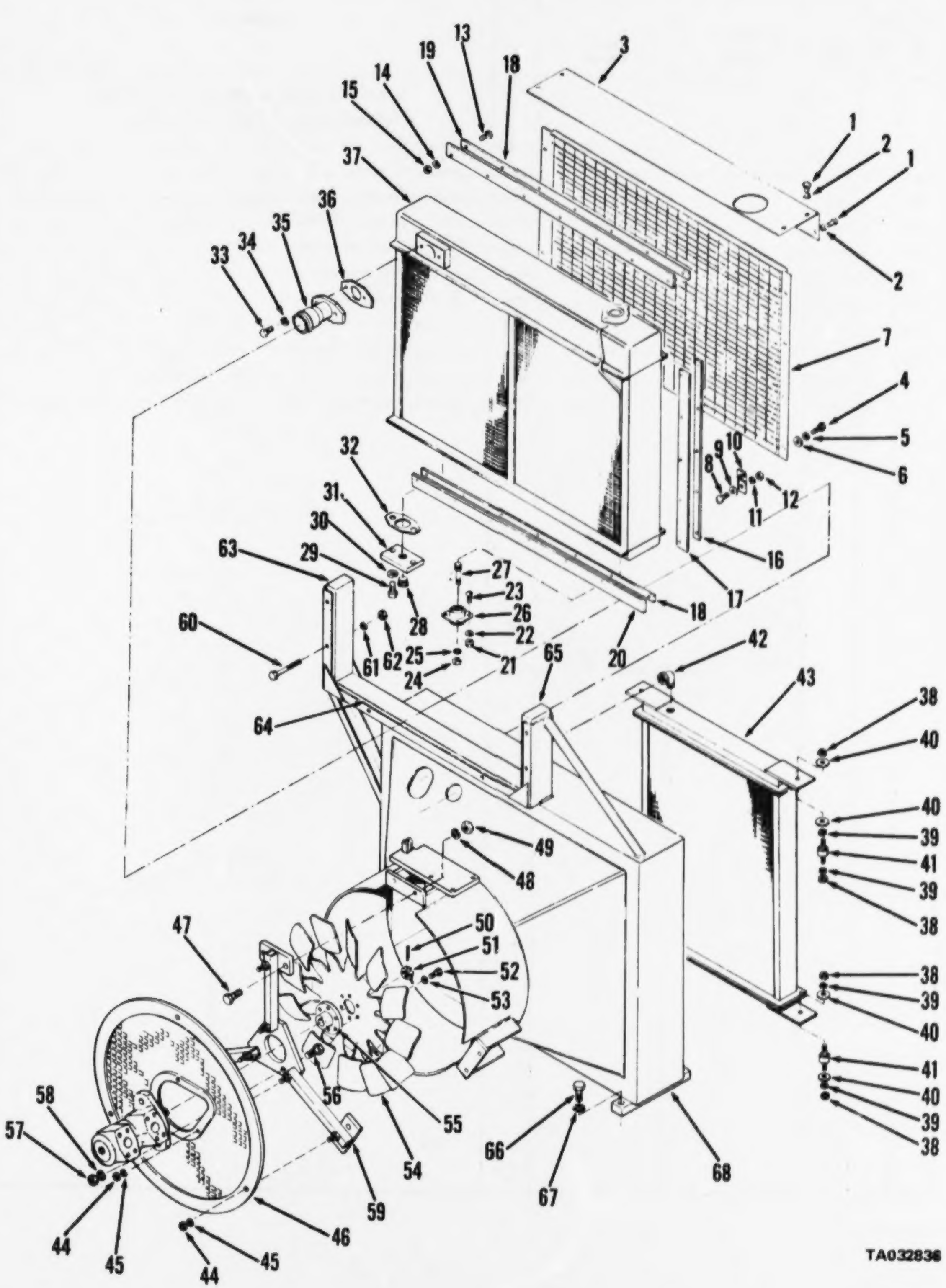

Figure 189. Radiator and fan assembly

(1) ILLUSTRATION (a) FIG NO.	(b) ITEM NO.	(2) SMR CODE	(3) NATIONAL STOCK NUMBER	(4) PART NUMBER	(5) FSCM	(6) DESCRIPTION USABLE ON CODE	(7) U/M	(8) QTY INC IN UNIT
						FUNCTIONAL GROUP 59 COOLING SYSTEM,ENGINE, CARRIER		
189	29	PAOZZ	4730-00-088-8665	MS45065-10	96906	..PLUG PIPE 3/4-14 NPT RADIATOR..................................		
189	56	XBOZZ	5305-00-782-9494	MS90725-114	96906	..SCREW,CAP,HEXAGON 1/2-13X1-3/4 MOTOR MTG.................	EA	1
189	57	XBOZZ	5310-00-584-5272	MS35338-48	96906	..WASHER,LOCK 1/2 MOTOR MTG......................................	EA	2
189	58	XBOZZ	5310-00-768-0318	MS51967-14	96906	..NUT,PLAIN,HEXAGON 1/2-13 MOTOR MTG.........................	EA	2

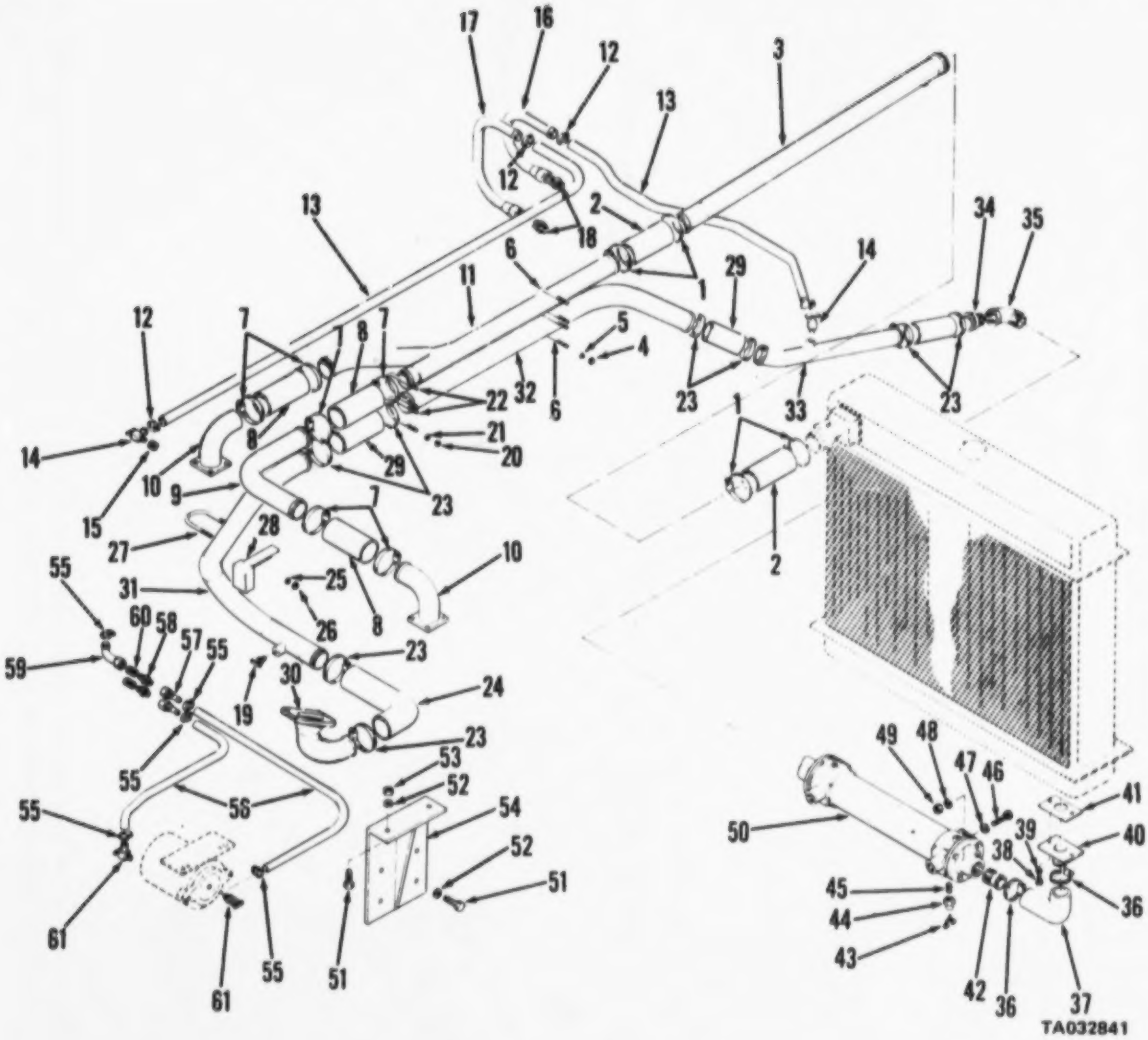

Figure 191. Heat exchanger and related parts

(1) ILLUSTRATION (a) FIG NO.	(b) ITEM NO.	(2) SMR CODE	(3) NATIONAL STOCK NUMBER	(4) PART NUMBER	(5) FSCM	(6) DESCRIPTION USABLE ON CODE	(7) U/M	(8) QTY INC IN UNIT
						FUNCTIONAL GROUP 59 COOLING SYSTEM,ENGINE, CARRIER		
191		AOOOO		8100J0598	27315	COOLING SYSTEM CARRIER	EA	1
191	1	XOOZZ		320431015	27315	.CLAMP HOSE RADIATOR HOSE	EA	4
191	2	PCOZZ	4720-01-050-5637	44Z145706	27315	.HOSE,PREFORMED 2-1/4 IDX6	EA	2
191	3	XOOZZ		13219E0574	97403	.TUBE WATER ENGINE RETURN LINE	EA	1
191	4	PAOZZ	5310-00-761-6882	MS51967-2	96906	.NUT,PLAIN,HEXAGON 1/4-20 TUBE CLMP MTG	EA	2
191	5	PAOZZ	5310-00-582-5965	MS35338-44	96906	.WASHER,LOCK 1/4 TUBE CLMP MTG	EA	4
191	6	XOOZZ		820P39402	27315	.U-BOLT CLAMP TUBE MTG	EA	2
191	7	XOOZZ	4730-00-908-3195	MS35842-10	96906	.CLAMP HOSE ENGINE OUTLET HOSE	EA	6
191	8	PCOZZ	4720-01-050-5637	44Z145706	27315	.HOSE PREFORMED 2-1/4IDX6 ENGINE OUTLET	EA	3
191	9	XOOZZ		20052	27315	.TUBE WATER RADIATOR LINE	EA	1
191	10	XOOZZ		20049	27315	.FLANGE WA OTLT COOLING SYSTEM	EA	2
191	11	XOOZZ		20051	27315	.TUBE WATER COOLING SYSTEM	EA	1
191	12	PAOZZ		32043106	27315	.CLAMP HOSE COOLING SYSTEM	EA	4
191	13	XOOZZ		44Z145704	27315	.HOSE RUBBER HEATER RETURN	EA	1
191	14	PAOZZ	4820-00-465-1589	13213E9243	97403	.COCK,DRAIN HEATER HOSE	EA	2
191	15	XOOZZ	4730-00-580-6739	52343027	27315	.BUSHING,PIPE HOSE TO BOSS	EA	1
191	16	XOOZZ		2021554	27315	.TUBE COPPER HOSE TO HEATER	EA	1
191	17	XOOZZ		20056	27315	.TUBE COPPER HOSE TO HEATOR	EA	1
191	18	XBOZZ	4730-00-827-0096	44Z37106	27315	.NIPPLE TUBE 518 OD	EA	2
191	19	PAOZZ	4820-00-949-1220	MS35782-5	96906	.COCK,DRAIN 1/4-18 ENGINE INLET LINE	EA	1
191	20	XBOZZ	5310-00-761-6882	MS51967-2	96906	.NUT,PLAIN,HEXAGON 1/4-20 TUBE CLMP MTG	EA	2
191	21	XBOZZ	5310-00-582-5965	MS35338-44	96906	.WASHER,LOCK 1/4 T 2 CLMP MTG	EA	4
191	22	XDOZZ	3930-00-949-8925	820P35402	27315	.U-BOLT CLAMP TUF 4TG	EA	2
191	23	XOOZZ		320431019	27315	.CLAMP HOSE LP	EA	8
191	24	PCOZZ	4720-01-058-4929	44Z145805	27315	.HOSE,PREFORMED 90DEG-2-3-41D ENG INLET	EA	1
191	25	PAOZZ	5310-00-761-6982	MS51967-2	96906	.NUT,PLAIN,HEXAGON 1-4-20 TUBE CLMP MTG	EA	2
191	26	PAOZZ	5310-00-582-5965	MS35338-44	96906	.WASHER,LOCK 1-4 TUBE CLMP MTG	EA	4
191	27	PAOZZ	3930-00-849-8925	820P35402	27315	.U-BOLT CLAMP TUBE MTG	EA	2
191	28	XOOZZ		16P2869	27315	.BRACKET TUBE SUPPORT	EA	1
191	29	PCOZZ	4720-01-050-5637	44Z145706	27315	.HOSE,PREFORMED 2-1/4IDX6 IN LG	EA	3
191	30	XOOZZ		820621	27315	.INLET WATER RAD LINE TO ENG	EA	1
191	31	XOOZZ		13219E0569	97403	.TUBE WATER RAD TO ENG	EA	1
191	32	XOOZZ		20053	27315	.TUBE WATER RAD TO ENG	EA	1
191	33	XOOZZ		20055	27315	.TUBE WATER RAD TO ENG	EA	1
191	34	XBOZZ	4730-01-029-8677	820P355	27315	.ADAPTER,STRAIGHT,PI TUBE TO ELBOW	EA	1
191	35	XOOZZ		44019809	27315	.ELBOW PIPE HT EXCH TO TUBE	EA	1
191	36	XOOZZ	4730-00-908-3195	MS35842-10	96906	.CLAMP HOSE RAD TO HT EXCH HOSE	EA	2
191	37	PCOZZ	4720-00-455-5944	13205E3312-1	97403	.HOSE,PREFORMED 90DEG 21D RAD TO HT EXCH	EA	1

(1) ILLUSTRATION		(2)	(3)	(4)	(5)	(6)	(7)	(8)
(a) FIG NO.	(b) ITEM NO.	SMR CODE	NATIONAL STOCK NUMBER	PART NUMBER	FSCM	DESCRIPTION USABLE ON CODE	U/M	QTY INC IN UNIT
191	38	XBOZZ	5305-00-069-5573	MS90725-85	96906	.SCREW,CAP,HEXAGON H 7/16-14X1 OUTLET MTG....................	EA	2
191	39	XBOZZ	5310-00-209-0965	MS35338-47	96906	.WASHER,LOCK 7/16 OUTLET MTG..............................	EA	2
191	40	XDOZZ		20057	27315	.OUTLET RADIATOR..	EA	1
191	41	PAOZZ	5330-01-025-7011	2CZ1586	27315	.GASKET OUTLET RADIATOR...................................	EA	1
191	42	XDOZZ		820T550	27315	.ADAPTER HOSE HOSE TO HT EXCH.............................	EA	1
191	43	PAOZZ	4820-00-465-1589	13213E9243	97403	.COCK,DRAIN HEAT EXCHANGER................................	EA	1
191	44	XBOZZ		18Q106D39	27315	.COUPLING PIPE HEAT EXCHANGER.............................	EA	1
191	45	XBOZZ		20U28D51	27315	.NIPPLE PIPE DRAIN COCK...................................	EA	1
191	56	PCOZZ	4720-00-087-9122	44Z145701	27315	.HOSE,NONMETALLIC RUST INHIBITOR LINES....................	EA	1
191	57	PAOZZ	4730-01-028-9596	1C0108410	79470	.HOSE,END SWIVEL RUST INHIBITOR LINES.....................	EA	2
191	58	XDOZZ		44Z208D15	27315	.ADAPTER TUBE RUST INHIBITOR LINES........................	EA	1
191	59	XDOZZ		44Z215D19	27315	.ELBOW TUBE RUST INHIBITOR LINES..........................	EA	1
191	60	XDOZZ	4730-00-239-3047	3-4X1-2PTRB	30780	.BUSHING,PIPE NPTF RUST INHIBITOR.........................	EA	1
191	61	PAOZZ	4820-00-465-1589	13213E9243	97403	.COCK,DRAIN RUST INHIBITOR HOSE...........................	EA	2

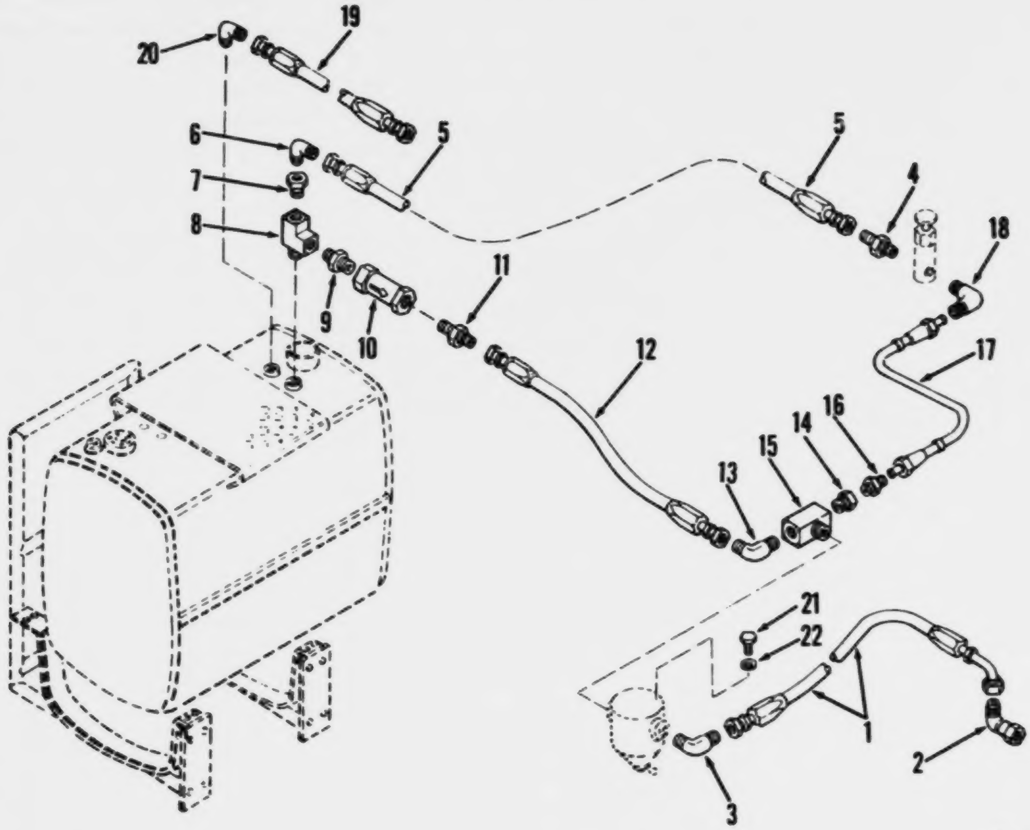

Figure 192. Hose and tube assemblies, fuel

(1) ILLUSTRATION (a) FIG NO.	(b) ITEM NO.	(2) SMR CODE	(3) NATIONAL STOCK NUMBER	(4) PART NUMBER	(5) FSCM	(6) DESCRIPTION USABLE ON CODE	(7) U/M	(8) QTY INC IN UNIT
						FUNCTIONAL GROUP 60 FUEL SYSTEM,ENGINE, CARRIER		
192		A0000		910CN1951	27315	.FUEL SUPPLY CARRIER..................................	EA	1
192	1	MFOZZ		4402950	27315	.HOSE ASSY FUEL CARRIER FUEL SYSTEM..........................	EA	1
192	2	XBOZZ		440222-7	27315	.ELBOW,TUBE 5/8X7/8-14 37DEG FLARE FUEL.........................	EA	1
192	3	XBOZZ	4730-00-254-6227	49X6X2	79470	.ELBOW,PIPE TO TUBE FUEL....................................	EA	1
192	4	XBOZZ		2M4ZMB	70434	.ADAPTER,STRAIGHT 1/4 TUBE-1/8NPTF PRIMER,TO TANK LINE.......	EA	1
192	5	MFOZZ		1-4402580	27315	.HOSE ASSY PRIMER TO FUEL TANK..............................	EA	1
192	6	XBOZZ	4730-00-278-4673	MS20822-4-4B	96906	.ELBOW,PIPE TO TUBE 1/4 TUBEX1/4NPT........... PRIMER PUMP FUEL LINE..	EA	1
192	7	XBOZZ	4730-00-194-0216	AN912-5	88044	.BUSHING,PIPE 1-2-14X1-4-18 PRIMER PUMP TO TANK FUEL LINE....	EA	1
192	8	XBOZZ	4730-01-028-1586	2225P-8	87373	.TEE PIPE 1-2-14-PRIMER TO FUEL TANK........................	EA	1
192	9	XBOZZ		3325-8X6	14770	.REDUCER EXT THD 1/2-14NPTFX3/8-18NPTF.......................	EA	1
192	10	PAOZZ	4820-00-182-9050	132C5E4334	97403	.VALVE,CHECK FUEL SUPPLY LINE...............................	EA	1
192	11	XBOZZ		4M6ZMB	70434	.ADAPTER STRGHT 1/2 TUBEX3/8-NPTF...........................	EA	1
192	12	MFOZZ		1-4402940	27315	.HOSE ASSEMBLY TANK TO FILTER...............................	EA	1
192	13	XBOZZ		49X6X2	79470	.ELBO,PIPE TO TUBE; TANK TO FILTER FUEL LINE..................	EA	1
192	14	PAOZZ	4730-00-194-0216	AN912-5	88044	.BUSHING,PIPE 1-2-14X1-4-18 PUMP TO FILTER......................	EA	1
192	15	PAOZZ	4730-01-029-5036	440236D35	27315	.TEE PIPE FUEL FILTER.......................................	EA	1
192	16	PAOZZ		2M4ZMB	70434	.ADAPTER,STRAIGHT 1/4 TUBE-1/8NPTF FILTER,-TO PUMP FUEL LINE.	EA	1
192	17	MFOZZ		4403304	27315	.TUBE ASSY CPPR 1/400 FILTER TO PUMP FUEL.LINE CKT 207F......	EA	1
192	18	PAOZZ	4730-00-231-5632	49X4	79470	.ELBOW,PIPE TO TUBE 1/4 TUBE X 1/8 NPTF........ TO PUMP FUEL LINE..	EA	1
192	19	MFOZZ		4402940	27315	.HOSE ASSEMBLY FUEL RETURN LINE.............................	EA	1
192		PAOZZ	4730-01-017-9374	MS39341-10-8A	96906	..COUPLING HOSE FUEL RETURN LINE............................	EA	1
192		PAOZZ	4730-01-017-9375	MS39341-8-8A	96906	..ADAPTER,STRAIGHT FUEL RETURN LINE.........................	EA	1
192		PCOZZ	4720-00-165-5112	MS39262-8	96906	..HOSE,RUBBER 5/8X FUEL RETURN LINE.........................	FT	1
192	20	PAOZZ	4730-00-254-6227	49X6X2	79470	.ELBOW PIPE TO TUBE FUEL RETURN LINE........................	EA	1
192	21	PAOZZ	5305-00-942-2196	MS18154-60	96906	.SCREW,CAP,HEXAGON 3/8-16X1.................................	EA	4
192	22	PAOZZ	5310-00-637-9541	MS35338-46	96906	.WASHER,LOCK 3/8..	EA	4

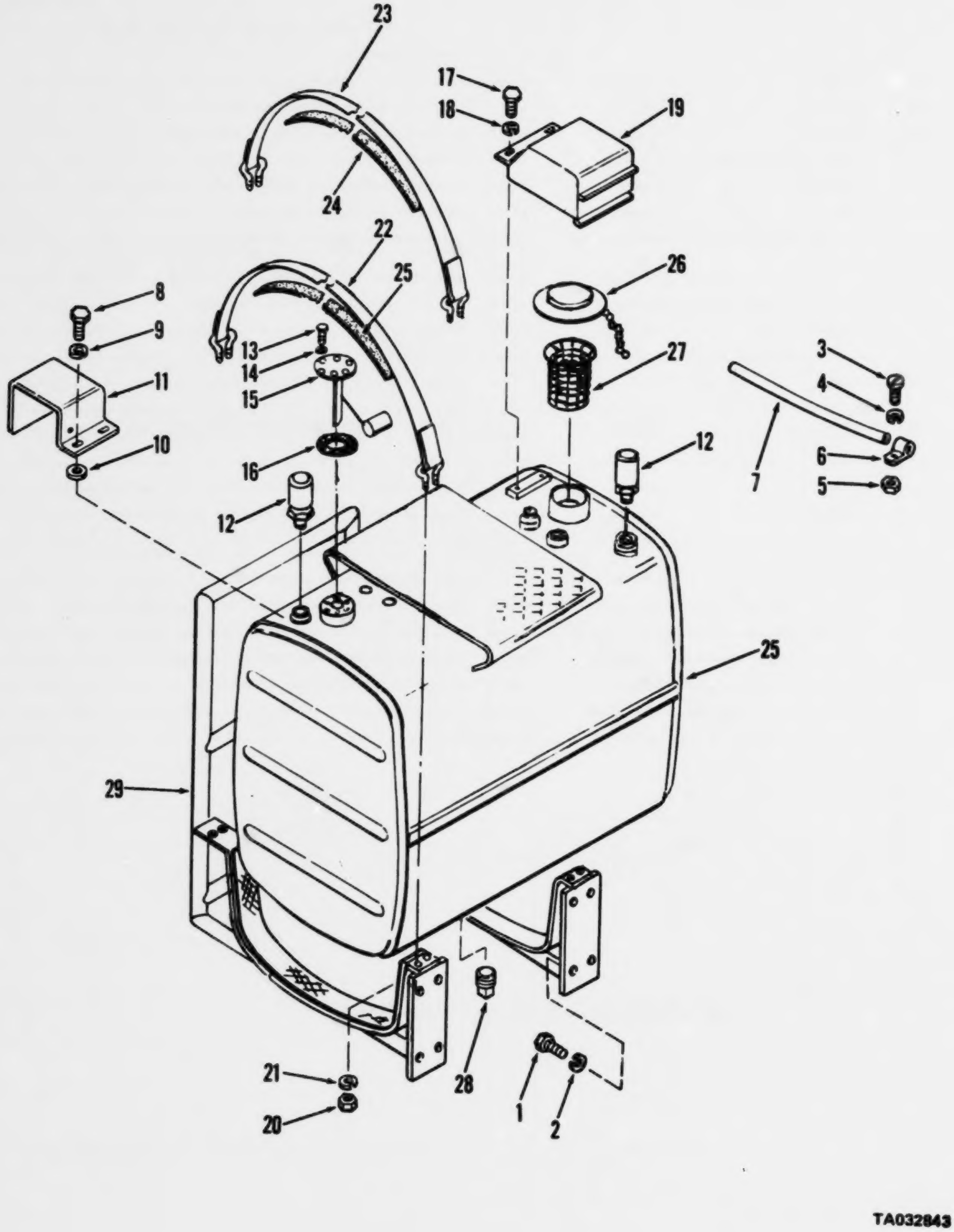

Figure 193. Tank assembly and mounting parts

(1) ILLUSTRATION (a) FIG NO.	(b) ITEM NO.	(2) SMR CODE	(3) NATIONAL STOCK NUMBER	(4) PART NUMBER	(5) FSCM	(6) DESCRIPTION USABLE ON CODE	(7) U/M	(8) QTY INC IN UNIT
						FUNCTIONAL GROUP 60 FUEL SYSTEM,ENGINE, CARRIER		
193	1	PAOZZ	5305-00-724-5910	MS90725-162	96906	.SCREW,CAP,HEXAGON 5/8-11X1-1/2 FUEL TANK,MTG................	EA	8
193	2	PAOZZ	5310-00-820-6653	MS35338-50	96906	.WASHER,LOCK SPRING,5/8 FUEL TANK MTG....................	EA	8
193	3	PAOZZ	5305-00-593-1848	MS35207-265	96906	.SCREW MACHINE NO 10-32X3/4 TUBE CLMP MTG................	EA	2
193	4	PAOZZ	5310-00-045-3296	MS35338-43	96906	.WASHER,LOCK NO 10 TUBE CLMP MTG........................	EA	2
193	5	PAOZZ	5310-00-534-9751	MS35650-302	96906	.NUT,PLAIN,HEXAGON NO 10 TUBE CLMP MTG...................	EA	2
193	6	XBOZZ		320450075	27315	.CLAMP TUBE FUEL LINE MTG............................	EA	2
193	7	PAOZZ		13217E6911	97403	.TUBING,PLASTIC FUEL LINE............................	EA	1
193	8	XBOZZ		MS90725-3	96906	.SCREW,CAP,HEX HD:1/4-20 X 1/2,GUARD MTG..................	EA	2
193	9	PAOZZ	5310-00-582-5965	MS35338-44	96906	.WASHER,LOCK 1/4 GUARD MTG...........................	EA	2
193	10	PAOZZ	5310-00-823-8804	MS27183-5	96906	.WASHER FLAT 1/4 GUARD MTG...........................	EA	2
193	11	XBOZZ		814F18	27315	.GUARD VALVE FUEL TANK...............................	EA	1
193	12	PAOZZ	4820-00-455-8292	13213E9522	97403	.VALVE,SAFETY RELIEF FUEL TANK........................	EA	2
193	13	PAOZZ	5305-00-999-7434	MS35207-263	96906	.SCREW,MACHINE NO 10TRANSMITTER MTG.....................	EA	5
193	14	PAOZZ	5310-00-045-3296	MS35338-43	96906	.WASHER,LOCK NO 10 TRANSMITTER MTG......................	EA	5
193	15	PAOZZ	6680-00-401-1400	13215E9952	97403	.TRANSMITTER,LIQUID FUEL TANK.........................	EA	1
193	16	PAOZZ	5330-00-119-4842	2013	98440	.GASKET FUEL TANK..................................	EA	1
193	17	XBOZZ		MS90725-3	96906	.SCREW,CAP,HEX HD,1/4-20 X 1/2,COVER MTG..................	EA	2
193	18	PAOZZ	5310-00-582-5965	MS35338-44	96906	.WASHER,LOCK 1/4 COVER MTG...........................	EA	2
193	19	XBOZZ		827N606	27315	.COVER FILL CAP FUEL TANK............................	EA	1
193	20	PAOZZ	5310-00-880-7745	MS51968-11	96906	.NUT,PLAIN,HEXAGON 7/16-20 FUEL TANK STRAP................	EA	8
193	21	PAOZZ	5310-00-209-0965	MS35338-47	96906	.WASHER,LOCK 7/16 FUEL TANK MTG.......................	EA	8
193	22	XBOZZ		829N26501	27315	.STRAP RTNG FUEL TANK MTG............................	EA	1
193	23	XBOZZ		829N26502	27315	.STRAP RTNG FUEL TANK MTG............................	EA	1
193	24	PCOZZ	8305-01-018-8743	13213E9520	97403	..WEBBING,TEXTILE FUEL TANK MTG STRAP....................	FT	1
193	25	PAOFF	2910-00-428-1487	1321F9498	97403	.TANK,FUEL,ENGINE CARRIER............................	EA	1
193	26	PAOZZ	4730-00-947-6512	1315	98440	..CAP ASSEMBLY CARRIER..............................	EA	1
193	27	PAOZZ	2910-01-021-4815	6312	98440	..FILLER NECK FUEL TANK.............................	EA	1
193	28	XDOZZ		2861	98440	..PLUG PIPE FUEL TANK DRAIN..........................	EA	1
193	29	XBOZZ		816J84	27315	.BRACKET FUEL TK CARRIER.............................	EA	1

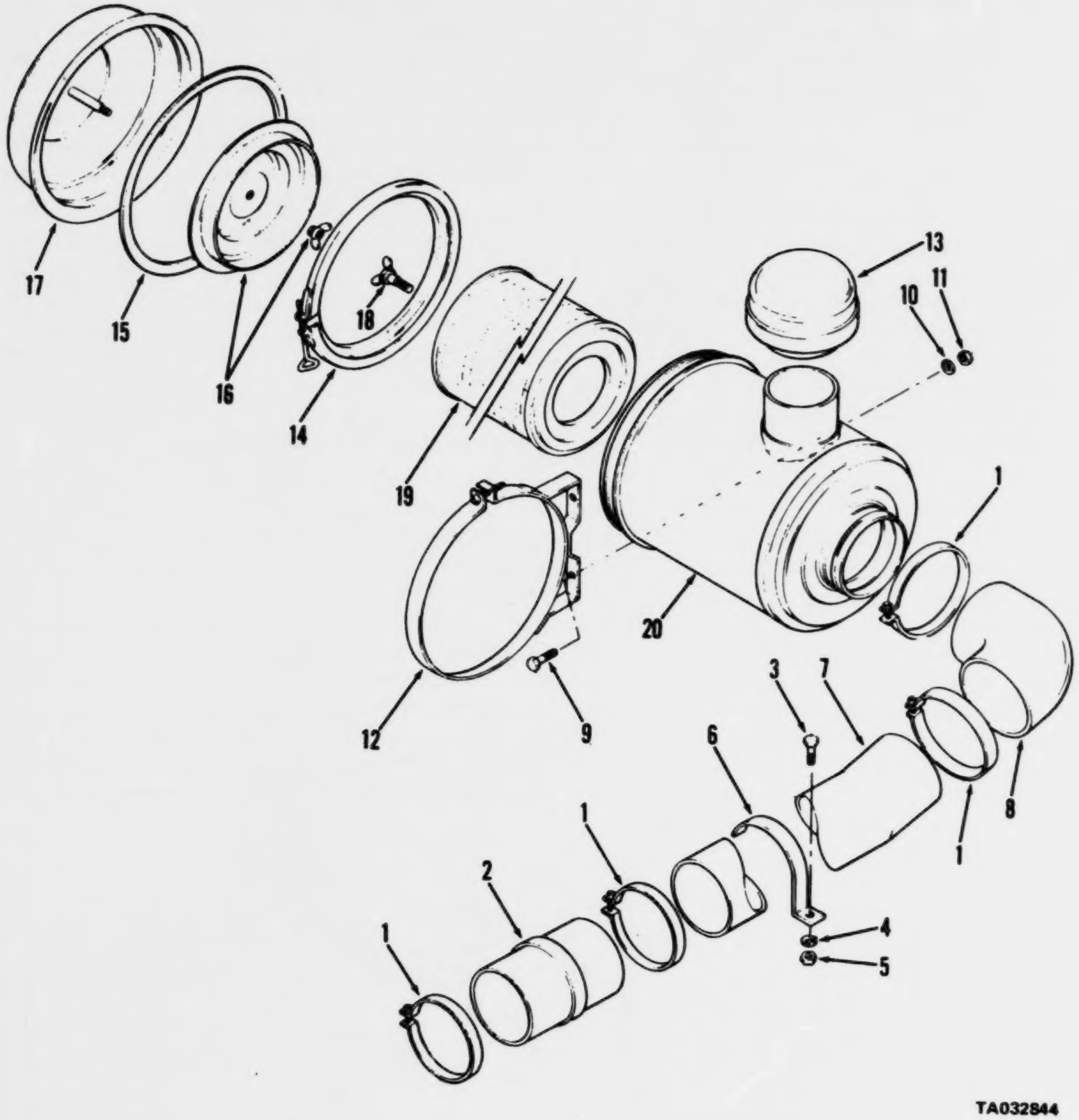

Figure 194. Air cleaner assembly and related parts

(1) ILLUSTRATION (a) FIG NO.	(b) ITEM NO.	(2) SMR CODE	(3) NATIONAL STOCK NUMBER	(4) PART NUMBER	(5) FSCM	(6) DESCRIPTION USABLE ON CODE	(7) U/M	(8) QTY INC IN UNIT
						FUNCTIONAL GROUP 61 AIR CLEANER,ENGINE, CARRIER		
194		AOOOO		810CMC837	27315	.AIR CLNR SYSTEM CARRIER ENGINE..............................	EA	1
194	1	PAOZZ	4730-00-450-5348	MS21920-49	96906	.CLAMP,HOSE AIR DUCT MTG......................................	EA	4
194	2	XDOZZ	4720-00-961-1584	P10-5611	18265	.COUPLING TUBE AIR DUCT.......................................	EA	1
194	3	PAOZZ	5305-00-942-2196	MS18154-60	96906	.SCREW,CAP,HEXAGON 3/8-16X1 AIR DUCT BRKT.MTG................	EA	1
194	4	PAOZZ	5310-00-637-9541	MS35338-46	96906	.WASHER,LOCK 3/8 AIR DUCT BRKT MTG............................	EA	1
194	5	PAOZZ	5310-00-732-0558	MS51967-8	96906	.NUT,PLAIN,HEXAGON 3/8-16 AIR DUCT BRKT.......................	EA	1
194	6	XDOZZ		1603504	27315	.BRACKET DUCT AIR CLEANER.....................................	EA	1
194	7	XDOZZ		14057	27315	.DUCT AIR AIR CLEANER SYSTEM..................................	EA	1
194	8	XDOZZ	4730-00-450-9092	P10-5534	18265	.ELBOW TUBE AIR CLEANER SYSTEM................................	EA	1
194	9	PAOZZ	5305-00-942-2196	MS18154-60	96906	.SCREW,CAP,HEXAGON 3/8-16X1 AIR CLEANER.......................	EA	4
194	10	PAOZZ	5310-00-637-9541	MS35338-46	96906	.WASHER,LOCK 3/8 AIR CLEANER MTG..............................	EA	4
194	11	PAOZZ	5310-00-761-0654	MS51967-9	96906	.NUT,PLAIN,HEXAGON AIR CLEANER MTG............................	EA	1
194		PBOZZ	2940-00-439-6013	1321E553E	97403	.CLEANER,AIR CARRIER ENGINE...................................	EA	1
194	12	XBOZZ	3930-00-116-9721	AAHC0-0345	18265	..CLAMP AIR CLEANER...	EA	1
194	13	XBOZZ	2940-00-459-6560	GAHCC-0165	18265	..CAP AIR STACK AIR CLEANER...................................	EA	1
194		XOOZZ		FMG12-0077	18265	..CLEANER ASSY AR CARRIER ENGINE..............................	EA	1
194	14	XDOZZ	5340-00-933-0698	P10-0808	18265	...CLAMP AIR CLNR CUP ASSY ATTACHING..........................	EA	1
194	15	PAOZZ	5330-00-964-6319	P17804	18265	...PACKING,PREFORMED AIR CLEANER..............................	EA	1
194	16	XDOZZ	2940-00-460-6579	P10-6325	18265	...BAFFLE AIR CLEANER...	EA	1
194	17	XDOZZ	2940-00-459-6559	P10-6589	18265	...CUP AIR CLNR...	EA	1
194	18	PAOZZ	5305-00-561-6507	P18464	18265	...THUMBSCREW AIR CLEANER FILTER..............................	EA	1
194	19	PAOZZ	2940-00-460-6578	P11-3320	18265	...ELEMENT AIR CLEANER AIR CLEANER............................	EA	1

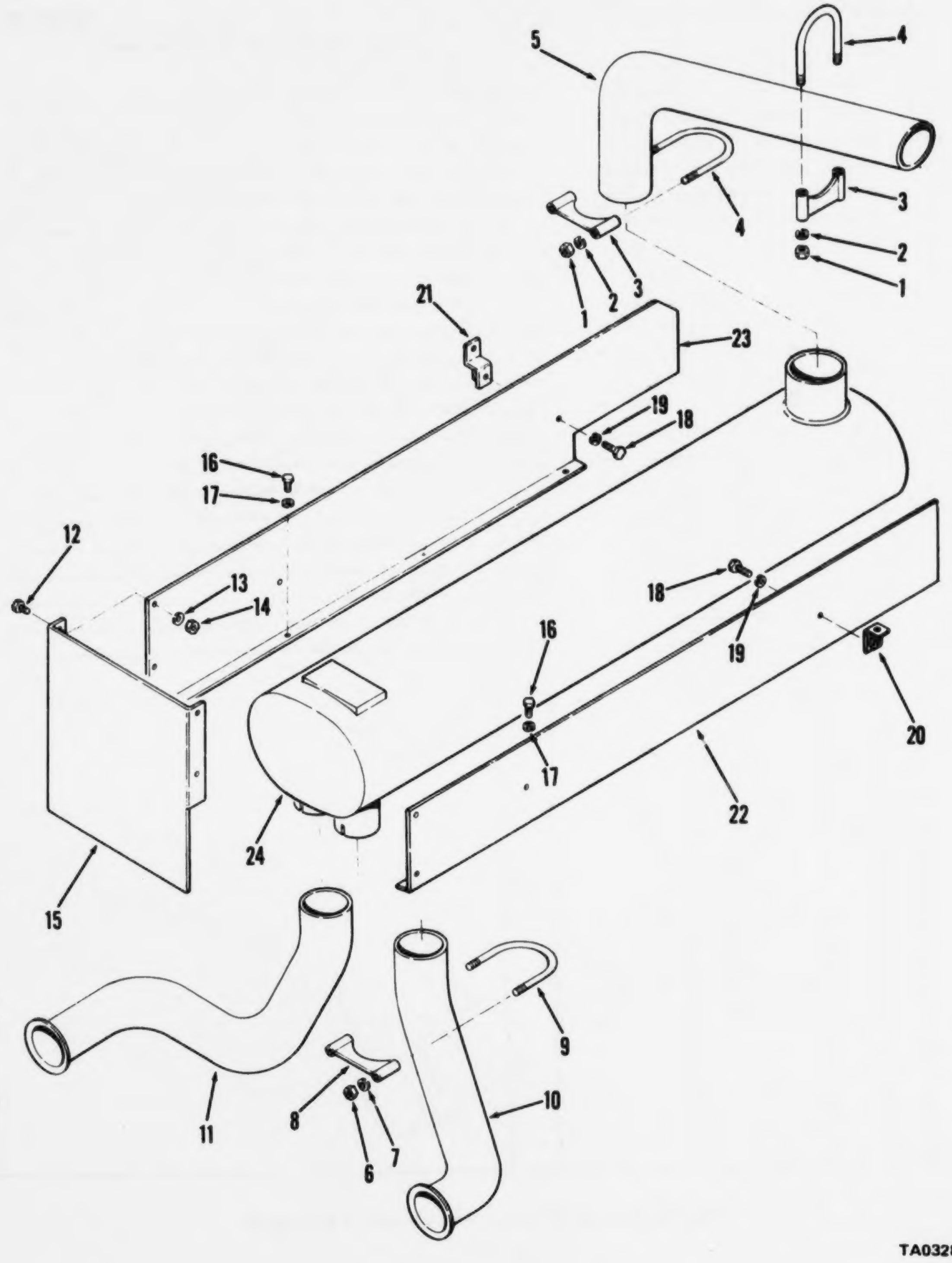

Figure 195. Muffler and mountings parts

(1) ILLUSTRATION (a) FIG NO.	(b) ITEM NO.	(2) SMR CODE	(3) NATIONAL STOCK NUMBER	(4) PART NUMBER	(5) FSCM	(6) DESCRIPTION USABLE ON CODE	(7) U/M	(8) QTY INC IN UNIT
						FUNCTIONAL GROUP 62 EXHAUST SYSTEM,ENGINE, CARRIER		
195		AOOOO		8100N0422	27315	EXHAUST SYSTEM CARRIER	EA	1
195	1	PAOZZ	5310-00-931-8167	MS51967-6	96906	.NUT,PLAIN,HEXAGON 5/16-18 CLAMP MTG	EA	4
195	2	PAOZZ	5310-00-407-9566	MS35338-45	96906	.WASHER,LOCK 5/16 CLAMP MTG	EA	4
195	4	XDOZZ	5306-01-040-4677	820P39401	27315	.U-BOLT CLAMP EXHAUST SYSTEM	EA	2
195	5	PAOZZ	2990-01-037-4986	27059	27315	.PIPE EXHAUST EXHAUST SYSTEM	EA	1
195	6	PAOZZ	5310-00-761-6882	MS51967-2	96906	.NUT,PLAIN,HEXAGON 1/4-20 CLAMP MTG	EA	8
195	7	PAOZZ	5310-00-582-5965	MS35338-44	96906	.WASHER,LOCK 1/4 CLAMP MTG	EA	4
195	8	PAOZZ	5340-01-039-2275	820T548D2	27315	.CLAMP,U-BOLT EXH PIPE TO MFLR	EA	2
195	9	PAOZZ	5306-01-046-3850	820P39404	27315	.U-BOLT CLAMP EXH PIPE TO MFLR	EA	2
195	10	PAOZZ	2990-01-038-8300	20064	27315	.PIPE,EXHAUST RIGHT BANK	EA	1
195	11	PAOZZ	2990-01-037-4985	27058	27315	.PIPE,EXHAUST LEFT BANK	EA	1
195	12	XBOZZ		MS90725-3	96906	.SCREW,CAP,HEX HD, 1/4-20 X 1/2,HEAT SHELD MTG	EA	4
195	13	PAOZZ	5310-00-582-5965	MS35338-44	96906	.WASHER,LOCK 1/4 HEAT SHLD MTG	EA	4
195	14	PAOZZ	5310-00-905-0762	MS51967-3	96906	.NUT,PLAIN HEXAGON:1/4-20,CLAMP MOUNTING	EA	4
195	15	XDOZZ		814833	27315	.SHIELD HEAT REAR	EA	1
195	16	PAOZZ	5305-00-068-0498	MS90725-1	96906	.SCREW,CAP,HEXAGON 1/4-20X3/8 HEAT SHIELD	EA	4
195	17	PAOZZ	5310-00-582-5965	MS35338-44	96906	.WASHER,LOCK 1/4 HEAT SHLD MTG	EA	2
195	18	XBOZZ		MS90725-3	96906	.SCREW,CAP,HEX HD,1/4-20 X 1/2,BRACKET MTG	EA	4
195	19	PAOZZ	5310-00-582-5965	MS35338-44	96906	.WASHER,LOCK 1/4 BRACKET MTG	EA	4
195	20	XDOZZ		816T1256	27315	.BRACKET EXHAUST SYSTEM	EA	2
195	21	XDOZZ		816T1255	27315	.BRACKET EXHAUST SYSTEM	EA	4
195	22	XDOZZ		814823	27315	.SHIELD HEAT LH EXHAUST SYSTEM	EA	1
195	23	XDOZZ		814822	27315	.SHIELD HEAT RH EXHAUST SYSTEM	EA	1
195	24	PAOZZ	2990-01-045-3434	27055	27315	.MUFFLER,EXHAUST EXHAUST SYSTEM	EA	1

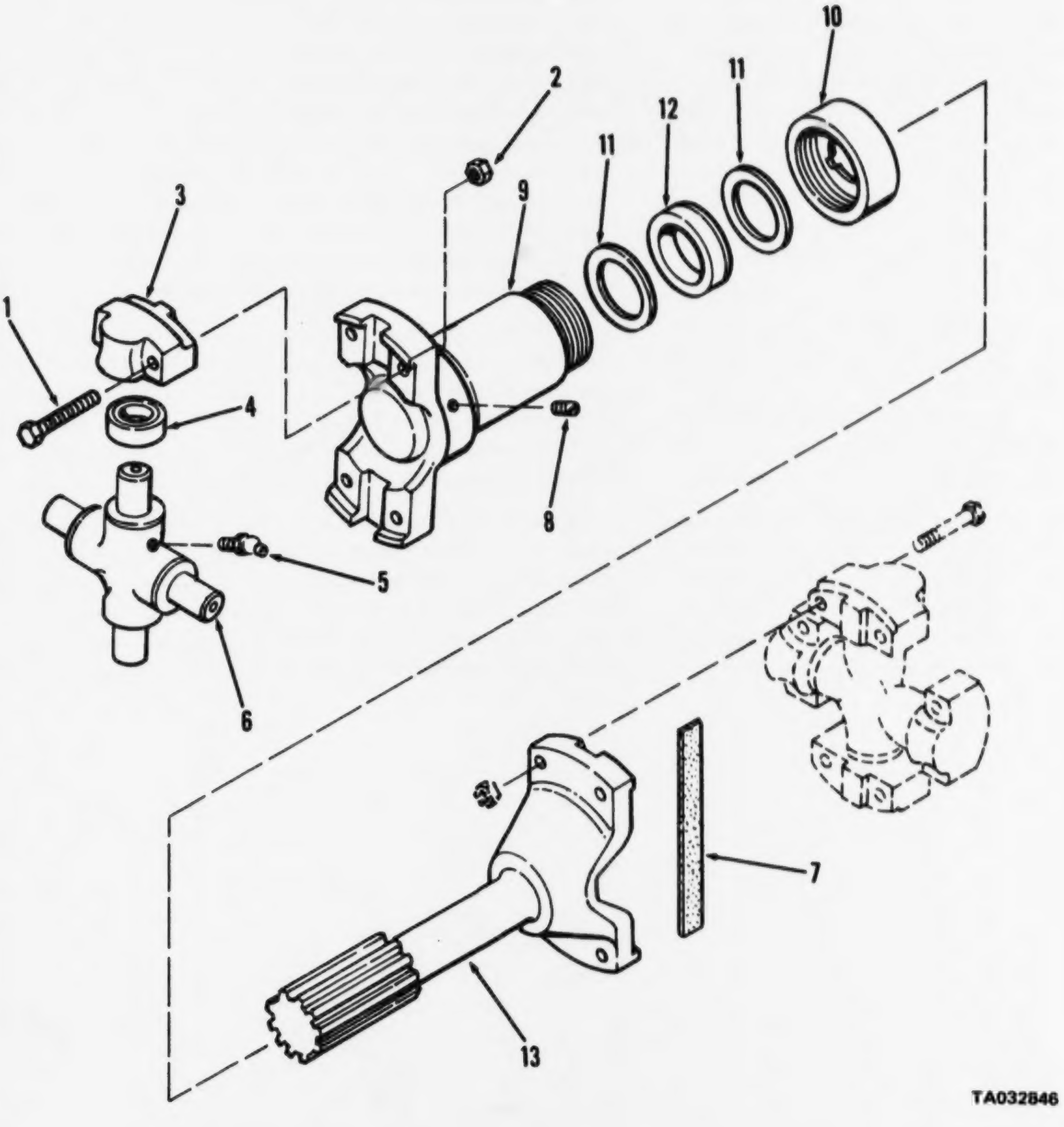

Figure 196. Shaft assembly, propeller, converter to transmission

(1) ILLUSTRATION (a) FIG NO.	(1) ILLUSTRATION (b) ITEM NO.	(2) SMR CODE	(3) NATIONAL STOCK NUMBER	(4) PART NUMBER	(5) FSCM	(6) DESCRIPTION USABLE ON CODE	(7) U/M	(8) QTY INC IN UNIT
						FUNCTIONAL GROUP 63 PROPELLER SHAFTS, CARRIER		
196		AOOFF		P1CCJ1152	27315	.POWER TRAIN CARRIER..	EA	1
196	5	PAOZZ	4730-00-050-4203	MS15003-1	96906	....FITTING,LUBRICATION CENTER CROSS........................	EA	2

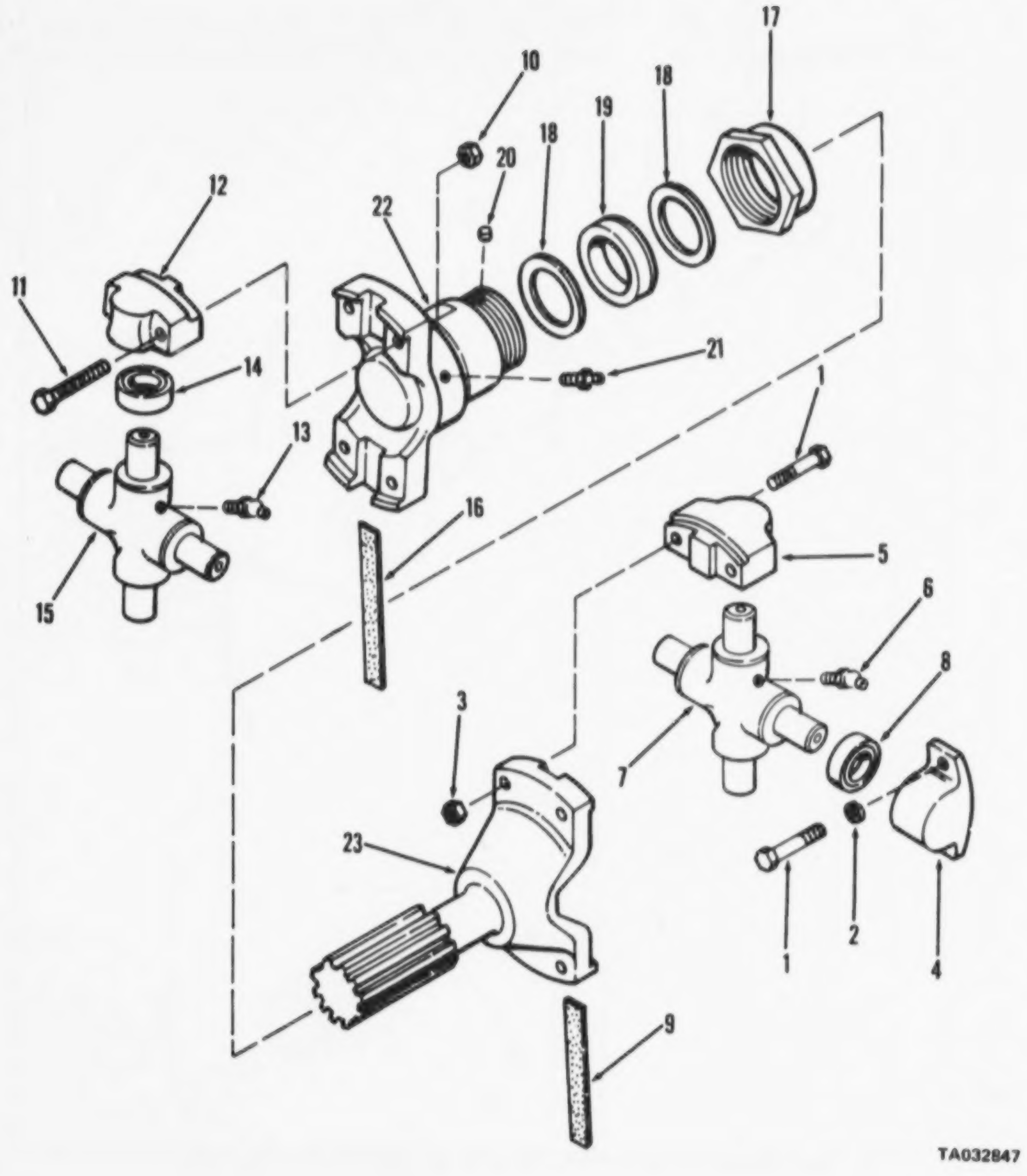

Figure 197. Shaft assembly, propeller, transmission to rear axle

(1) ILLUSTRATION (a) FIG NO.	(b) ITEM NO.	(2) SMR CODE	(3) NATIONAL STOCK NUMBER	(4) PART NUMBER	(5) FSCM	(6) DESCRIPTION USABLE ON CODE	(7) U/M	(8) QTY INC IN UNIT
						FUNCTIONAL GROUP 63 PROPELLER SHAFTS.		
						CARRIER		
197	21	PAOZZ	4730-00-050-4208	16108L	95879	....FITTING LUBRICATION YOKE LUB............................	EA	1

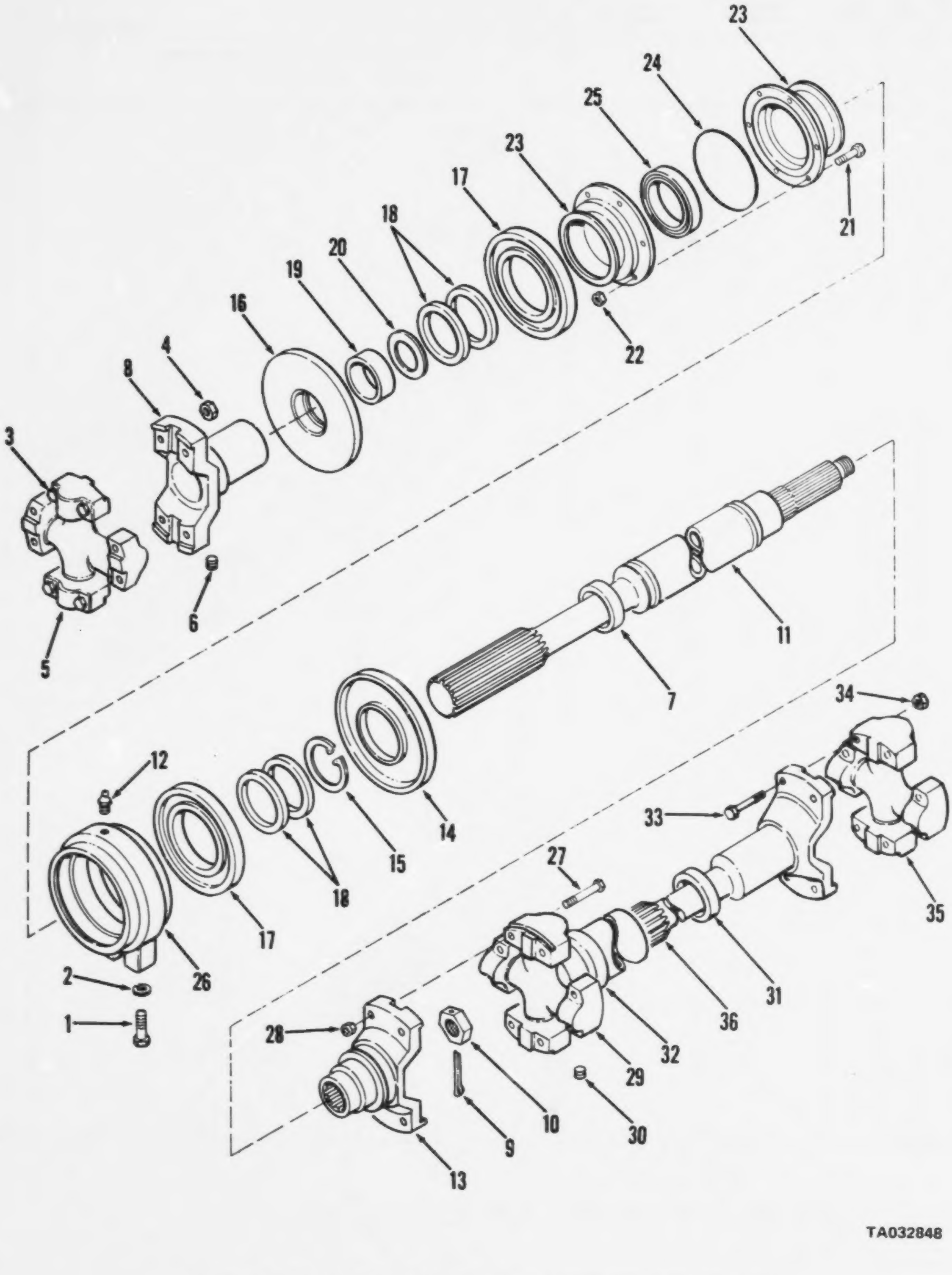

Figure 198. Shaft assembly, propeller, transmission to front axle

(1) ILLUSTRATION (a) FIG NO.	(b) ITEM NO.	(2) SMR CODE	(3) NATIONAL STOCK NUMBER	(4) PART NUMBER	(5) FSCM	(6) DESCRIPTION USABLE ON CODE	(7) U/M	(8) QTY INC IN UNIT
						FUNCTIONAL GROUP 63 PROPELLER SHAFTS,		
						CARRIER		
198	12	PAOZZ		202321	90192	...FITTING,LUBRICATION CENTER BEARING........................	EA	1

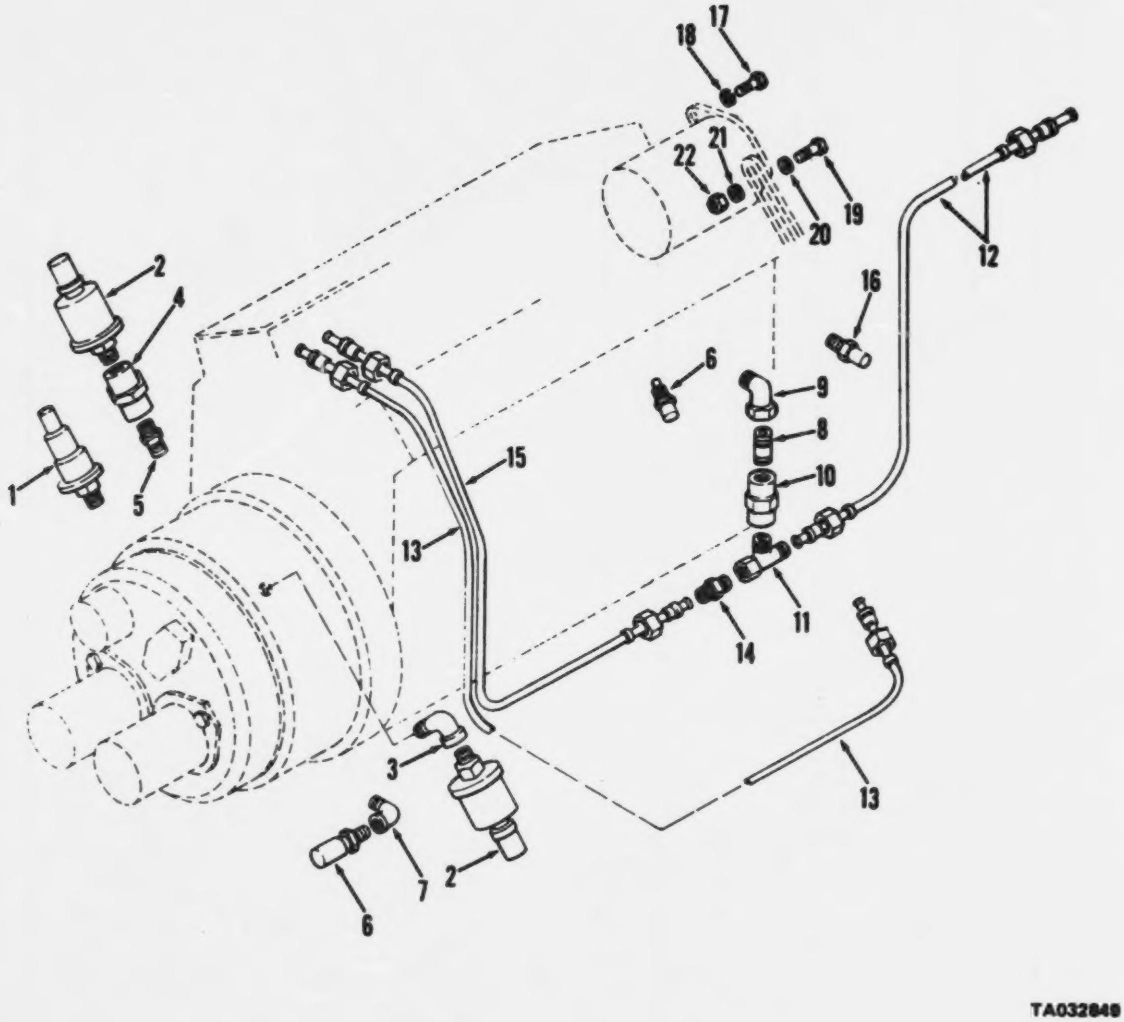

Figure 199. Transmitters, switches and tube assemblies

(1) ILLUSTRATION (a) FIG NO.	(b) ITEM NO.	(2) SMR CODE	(3) NATIONAL STOCK NUMBER	(4) PART NUMBER	(5) FSCM	(6) DESCRIPTION USABLE ON CODE	(7) U/M	(8) QTY INC IN UNIT
						FUNCTIONAL GROUP 64 TORQUE CONVERTER AND RELATED PARTS,CARRIER		
199		PAOZZ	9905-00-935-7777	MS39020-25	96906	..BAND,MARKER TUBE ASSY CKT 326	EA	2
199	17	XBOZZ	5305-00-709-8523	MS90727-87	96906	.SCREW CAP HEXAGON 7-16-14X1-3/4 ALTNTR...G	EA	2
199	18	PAOZZ	5310-00-637-9541	MS35338-46	96906	.WASHER,LOCK 7-16 ALTNTR MTG	EA	2
199	19	XBOZZ	5305-00-269-2805	MS90726-62	96906	.SCREW CAP HEXAGON 3-8-24X1-1-4 ALTNTR MTG	EA	1
199	20	PAOZZ	5310-00-637-9541	MS35338-46	96906	.WASHER,LOCK 3-8 ALTNTR MTG	EA	1
199	21	XBOZZ	5310-00-087-7493	MS27183-13	96906	.WASHER FLAT 3-8 ALTNTR MTG	EA	1
199	22	XBOZZ	5310-00-732-0558	MS51967-8	96906	.NUT,PLAIN,HEXAGON 3-8 ALTNTR MTG	EA	1

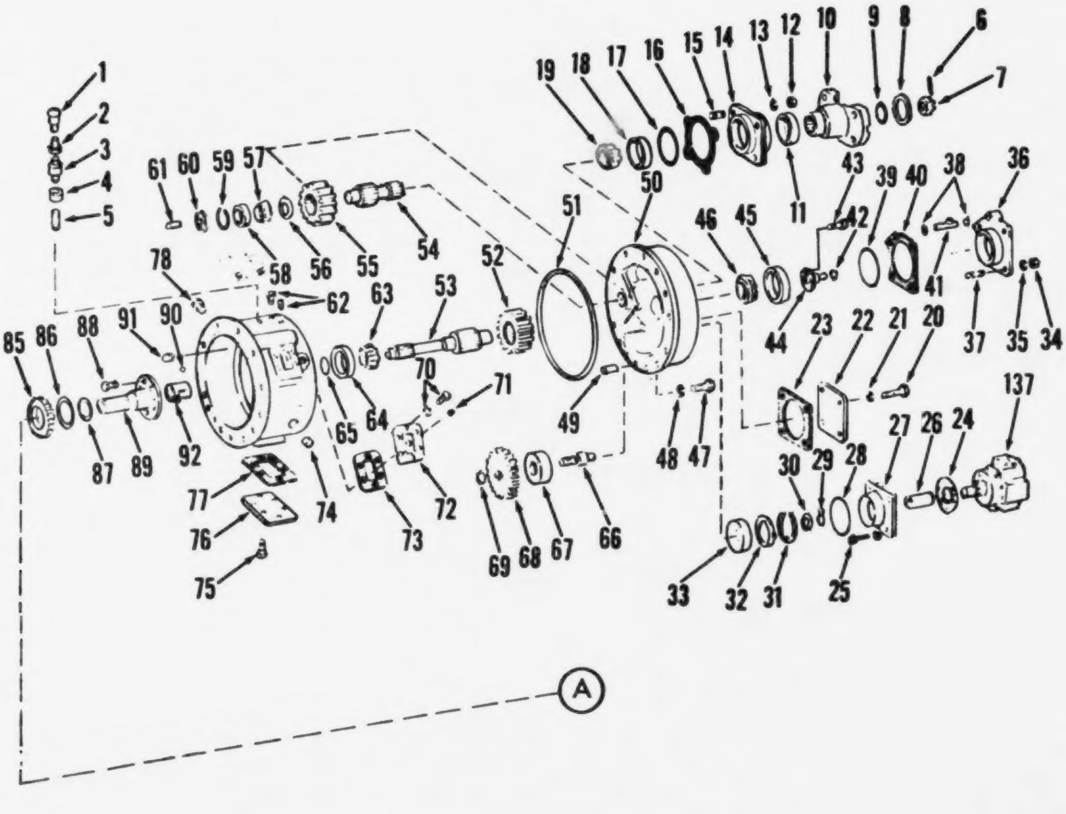

Figure 200. Converter assembly, torque (Sheet 1 of 2)

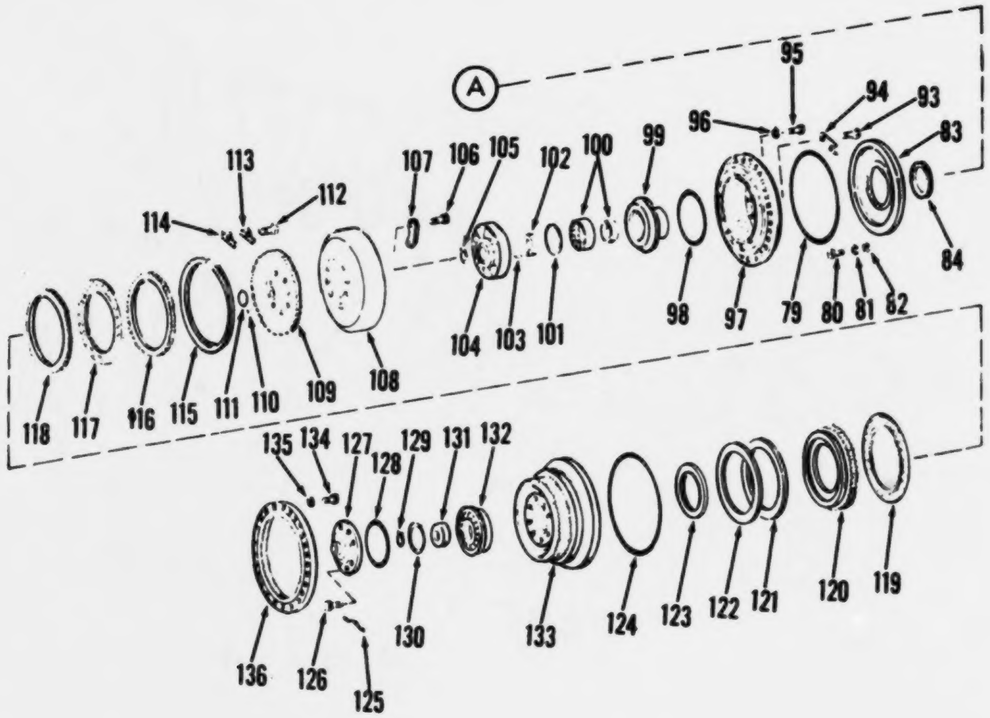

TA032851

Figure 200. Converter assembly, torque (Sheet 2 of 2)

(1) ILLUSTRATION (a) FIG NO.	(b) ITEM NO.	(2) SMR CODE	(3) NATIONAL STOCK NUMBER	(4) PART NUMBER	(5) FSCM	(6) DESCRIPTION USABLE ON CODE	(7) U/M	(8) QTY INC IN UNIT
						FUNCTIONAL GROUP 64 TORQUE CONVERTER AND RELATED PARTS,CARRIER		
200	1	PFOZZ	2520-00-051-9932	211433	12603	..BREATHER AIR TORQUE CONVERTER..............................	EA	1
200	2	XDOZZ		19F16	03504	..BUSHING RDCNG AIR BREATHER.................................	EA	1
200	3	PAOZZ	2520-00-922-6287	227265	12603	..BREATHER AIR BREATHER......................................	EA	1
200	4	XDOZZ		C31C9X6X2	79470	..COUPLING RDCNG 3-8-18THD SIZE 1-8-27THD.IZE - AIR BREATHER.	EA	1
200	5	PAOZZ	4730-01-024-3921	MS51873-66	96906	..NIPPLE PIPE 3-8-18THD SIZE 9IN LG AIR...ATHER..............	EA	1

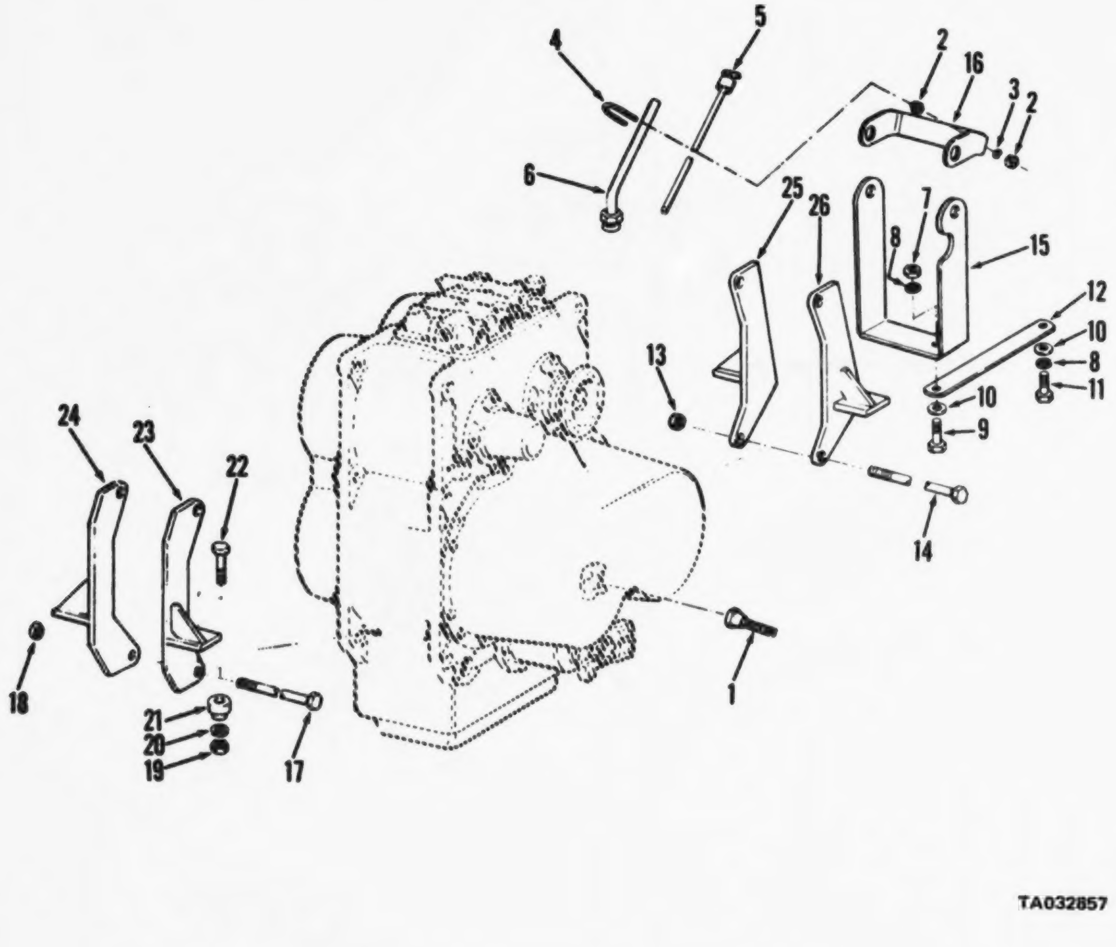

Figure 206. Mounts, transmission and connections

(1) ILLUSTRATION (a) FIG NO.	(b) ITEM NO.	(2) SMR CODE	(3) NATIONAL STOCK NUMBER	(4) PART NUMBER	(5) FSCM	(6) DESCRIPTION USABLE ON CODE	(7) U/M	(8) QTY INC IN UNIT
						FUNCTIONAL GROUP 66 MOUNTING COMPONENTS, TRANSMISSION		
206	1	PAOZZ	6680-00-679-9300	446125-25C	57733	.SHAFT FLEXIBLE SPEEDOMETER................................	EA	1
206	5	PBOZZ	6680-00-240-5674	4494	01943	.GAGE ROD,LIQUIDLEV TRANSMISSION OIL........................	EA	1
206	6	XDOZZ		20042	27315	.TUBE DIPSTICK TRANSMISSION................................	EA	1

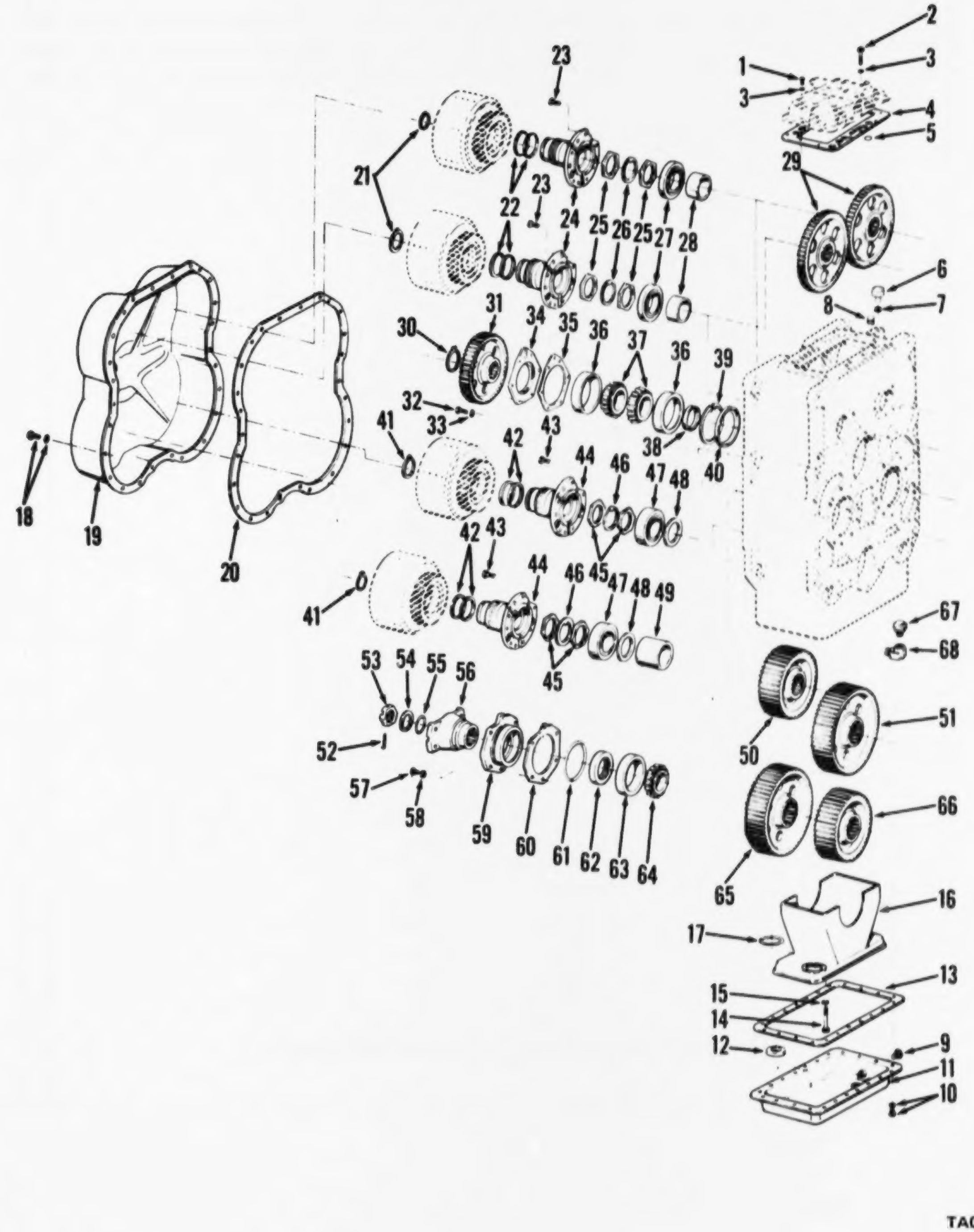

TA032858

Figure 207. Transmission assembly, automatic

(1) ILLUSTRATION (a) FIG NO.	(b) ITEM NO.	(2) SMR CODE	(3) NATIONAL STOCK NUMBER	(4) PART NUMBER	(5) FSCM	(6) DESCRIPTION USABLE ON CODE	(7) U/M	(8) QTY INC IN UNIT
						FUNCTIONAL GROUP 65 MOUNTING COMPONENTS, TRANSMISSION		
207	8	XBOZZ	4730-01-017-8057	1CF16	12603	..PLUG FILLER XMSN HOUSING....................................	EA	1
207	9	PAOZZ	4730-00-015-2273	215757	12603	..PLUG DRAIN XMSN HOUSING.....................................	EA	1
207	67	PFOZZ	2520-00-051-9932	211437	12603	..BREATHER XMSN..	EA	1
207	68	PAOZZ	4730-00-253-4413	MS35230-3	96906	..ELBOW,PIPE XMSN..	EA	1

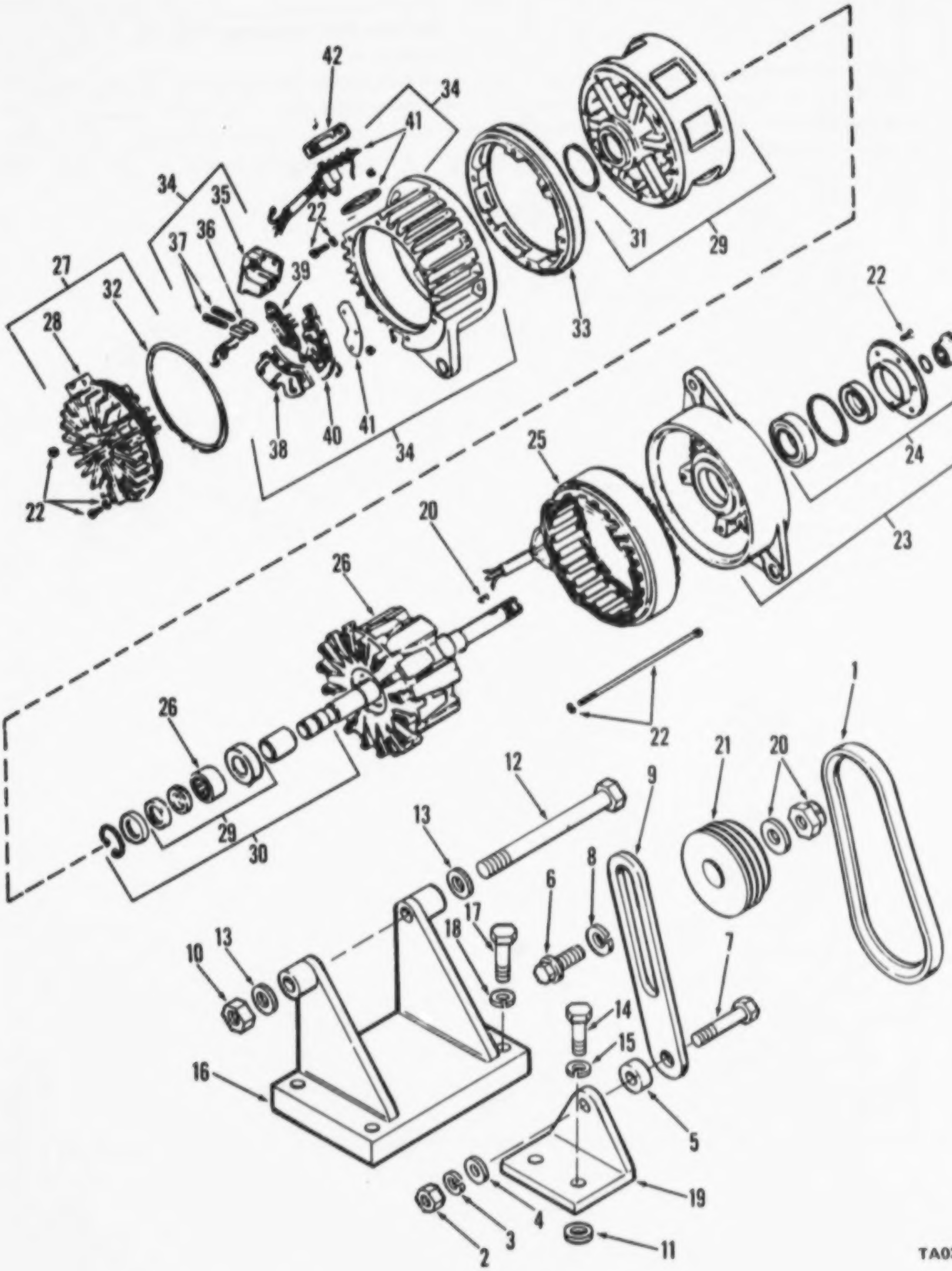

Figure 219. Alternator, battery charging

(1) ILLUSTRATION (a) FIG NO.	(b) ITEM NO.	(2) SMR CODE	(3) NATIONAL STOCK NUMBER	(4) PART NUMBER	(5) FSCM	(6) DESCRIPTION USABLE ON CODE	(7) U/M	(8) QTY INC IN UNIT
						FUNCTIONAL GROUP 67 ELECTRICAL COMPONENTS, ENGINE		
219	1	PAOZZ		MS51067-60	96906	BELT ALT DRIVE ENGINE	EA	3
219	2	PAOZZ	5310-00-465-3998	S20C	15434	.NUT,HEXAGON ENGINE	EA	1
219	3	PAOZZ	5310-00-584-5272	MS35338-1C	96906	.WASHER,LOCK ENGINE	EA	1
219	4	PAOZZ	5310-00-486-2505	108330	15434	.WASHER,FLAT ENGINE	EA	1
219	5	XBOZZ		65434	15434	.SPACER ENGINE	EA	1
219	6	PAOZZ	5305-00-942-2196	MS18154-60	96906	.SCREW,CAP,HEXAGON ENGINE	EA	1
218	7	PAOZZ	5305-00-782-9494	MS90725-114	96906	.SCREW,CAP,HEXAGON ENGINE	EA	1
219	8	PAOZZ	5310-00-637-9541	MS35338-42	96906	.WASHER,LOCK ENGINE	EA	1
219	9	PAOZZ	2920-00-478-8062	134130	15434	.LINK ADJUST ENGINE	EA	1
219	10	PAOZZ	5310-00-045-1015	451015	21450	.NUT,SELF LOCKING	EA	1
219	11	XBOZZ		154615	15434	.SPACER STARTER ENGINE	EA	2
219	12	XDOZZ		137856	15434	.SCREW CAP FLANG ENGINE	EA	1
219	13	XDOZZ		203760	15434	.WASHER ALT ALT MTG	EA	2
219	14	PAOZZ	5305-00-226-4831	100124	19207	.BOLT,MACHINE ENGINE	EA	1
219	15	PAOZZ	5310-00-407-9566	MS35338-45	96906	.WASHER,LOCK ENGINE	EA	1
219	16	XBOZZ	2920-00-259-0700	154638	15434	.BRKT ALTERNATOR ENGINE ALTERNATOR 1	EA	1
219	17	PAOZZ	5305-00-709-8542	MS90727-91	96906	.SCREW,CAP,HEXAGON ENGINE	EA	4
219	18	PAOZZ	5310-00-209-0965	MS35338-47	96906	.WASHER,LOCK ENGINE	EA	4
219	19	XBOZZ		218745	15434	.BRKT ALTERNATOR ENGINE	EA	1
219		XDOFF		5MA51C2UT	19728	.ALTERNATOR ENGINE	EA	1
219	20	PAOZZ	5310-01-027-5392	90-2189	19728	..NUT WASHER KYPG ALTERNATOR	EA	1
219	21	XDOZZ		218746	15434	..PULLEY ALTERNATOR	EA	1

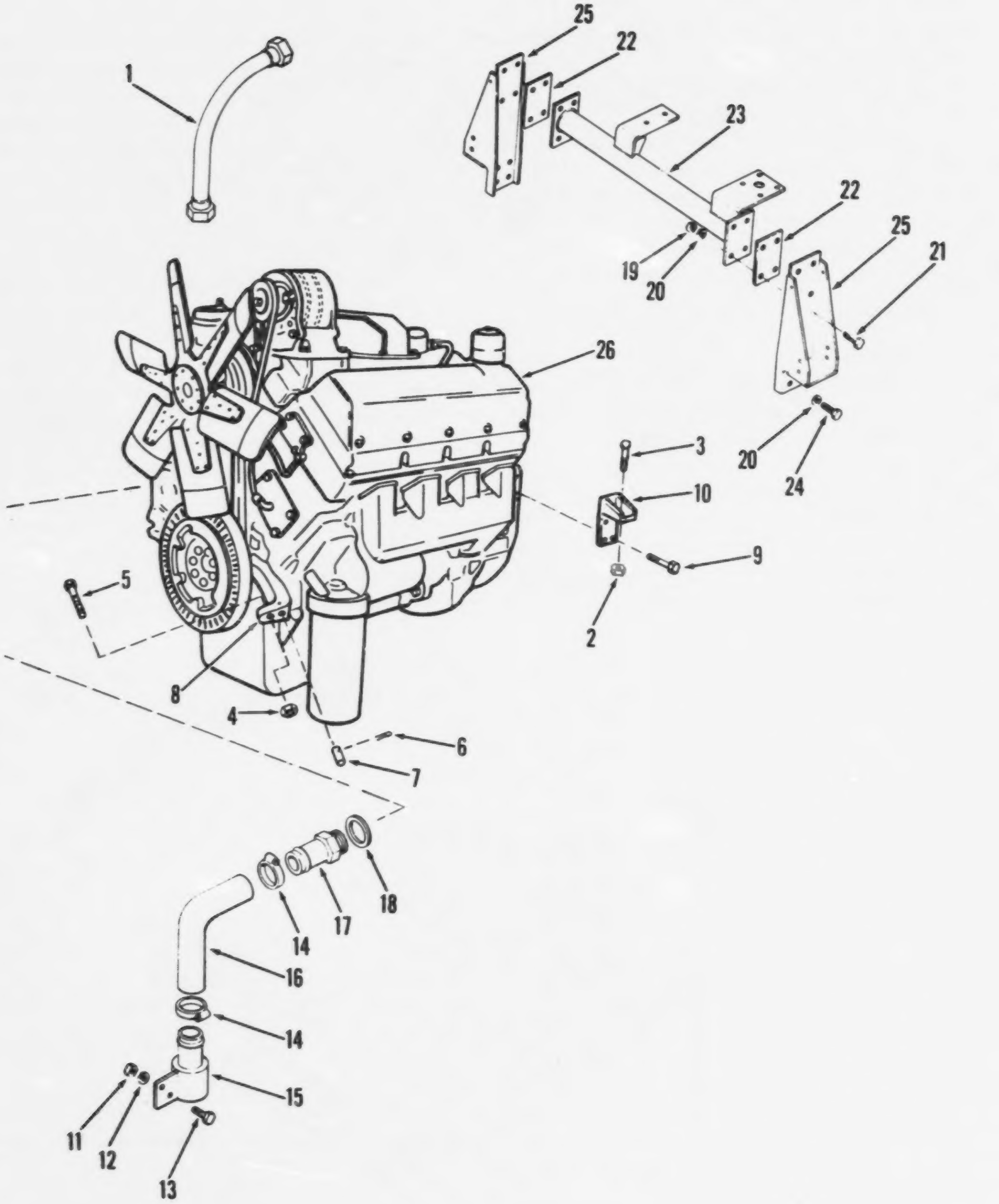

Figure 220. Engine and mountings

(1) ILLUSTRATION (a) FIG NO.	(b) ITEM NO.	(2) SMR CODE	(3) NATIONAL STOCK NUMBER	(4) PART NUMBER	(5) FSCM	(6) DESCRIPTION USABLE ON CODE	(7) U/M	(8) QTY INC IN UNIT
						FUNCTIONAL GROUP 68 ENGINE ASSEMBLY,		
						CARRIER		
220	1	PAOZZ	3040-01-040-7283	10Q2304	27315	.SHAFT FLEXIBLE TACHOMETER..................................	EA	1

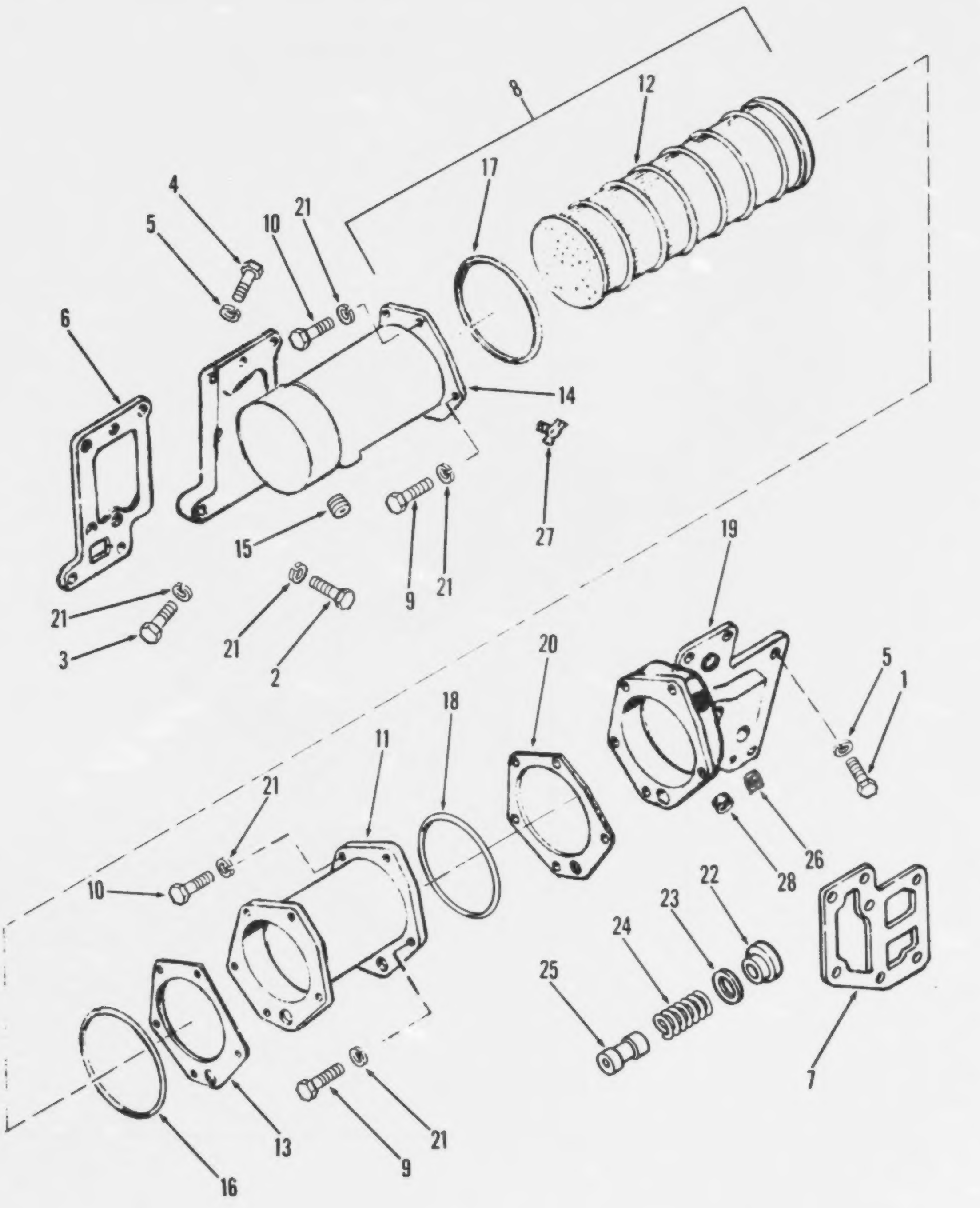

Figure 221. Cooler, oil

(1) ILLUSTRATION (a) FIG NO.	(b) ITEM NO.	(2) SMR CODE	(3) NATIONAL STOCK NUMBER	(4) PART NUMBER	(5) FSCM	(6) DESCRIPTION USABLE ON CODE	(7) U/M	(8) QTY INC IN UNIT
						FUNCTIONAL GROUP 68 ENGINE ASSEMBLY,		
						CARRIER		
221	1	XBOZZ	5305-00-269-3217	MS90725-67	96906	..SCREW,CAP,HEXAGON 3-8-16X1-1-4 MTG OIL..OLER................	EA	1
221	5	PAOZZ	5310-00-637-9541	MS35338-46	96906	..WASHER,LOCK 3-8 OIL COOLER................................	EA	15
221	6	KBOZZ		156887	15434	..GASKET HSG OIL COOLER....................................	EA	1
221	7	KBOZZ		179308	15434	..GASKET COVER OIL COOLER..................................	EA	1
221	9	XBOZZ	5305-00-269-3213	MS90725-62	96906	...SCREW,CAP,HEXAGON 3-8-16X1-1-4 HOUSING..................	EA	8
221	10	XBOZZ		S104	15434	...SCREW,CAP,HEX HD 3/8-16X1 1/4...........................	EA	2
221	12	PAOZZ	2940-01-028-0606	186348	15434	...ELEMENT,OIL COOLER COOLER LL ASSY......................	EA	1
221	13	PAOZZ	5330-01-028-5628	187657	15434	...GASKET HOUSING..	EA	1
221	15	XBOZZ		S995	15434	....PLUG,PIPE COOLER ASSY..................................	EA	3
221	20	XDOZZ		179309	15434	..GASKET COVER COOLER LLO ASSY.............................	EA	1
221	21	PAOZZ		MS35338-46	96906	..WASHER,LOCK 3/8 CAP......................................	EA	10
221	22	XDOZZ		183513	15434	..CAP COOLER COOLER LLO ASSY...............................	EA	1
221	23	PAOZZ	5330-00-599-5463	S3050	15434	..GASKET CAP COOLER LLO ASSY...............................	EA	1
221	24	XDOZZ		68274	15434	..SPRING HLCPS COOLER ELEMENT..............................	EA	1
221	26	PAOZZ	4730-00-019-9566	S9118	15434	..PLUG,PIPE COOLER LLO ASSY................................	EA	2

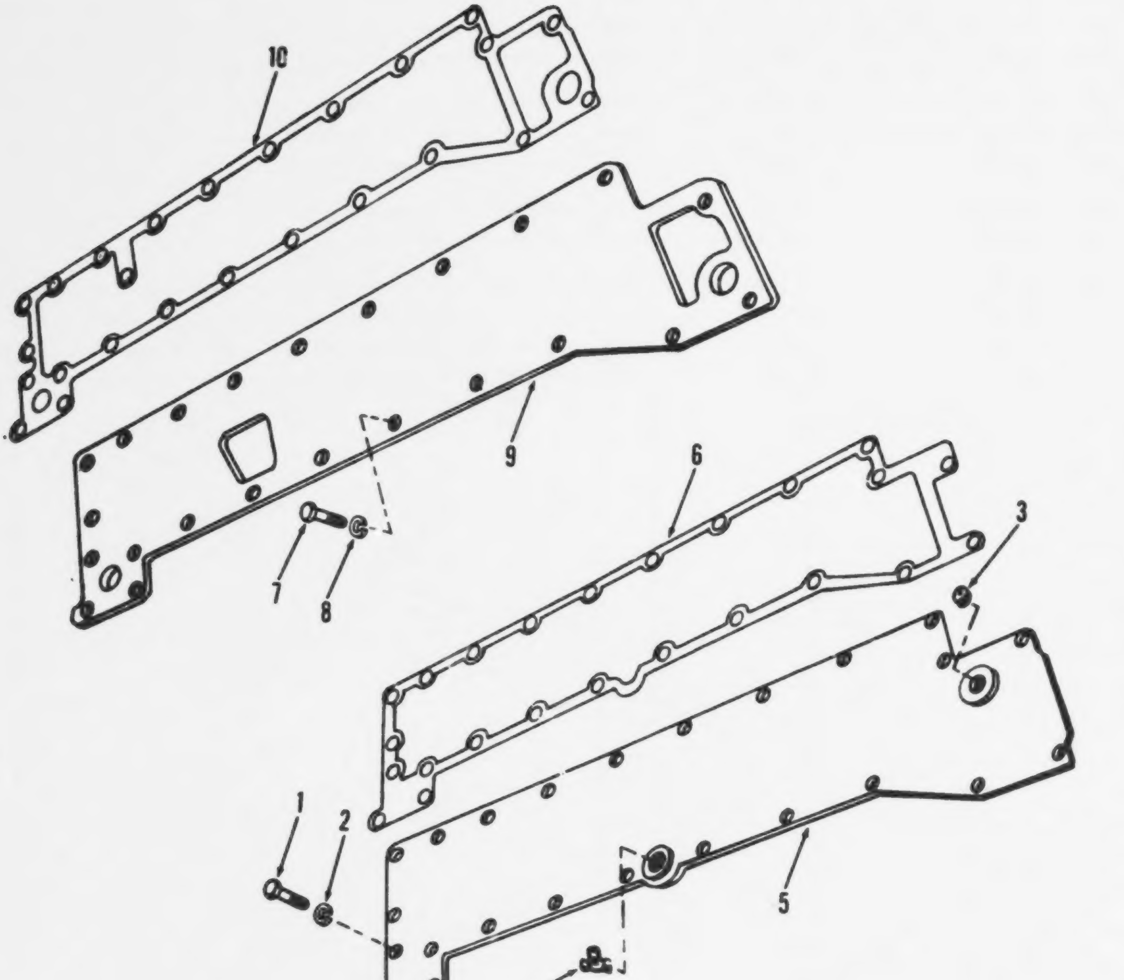

Figure 223. Plates, water header

(1) ILLUSTRATION (a) FIG NO.	(b) ITEM NO.	(2) SMR CODE	(3) FEDERAL STOCK NUMBER	(4) PART NUMBER	(5) FSCM	(6) DESCRIPTION USABLE ON CODE	(7) U/M	(8) QTY INC IN UNIT
						FUNCTIONAL GROUP 68 ENGINE ASSEMBLY,CARRIER		
223	4	PAOZZ	4820-00-276-9041	107947	15434	..COCK,DRAIN HEADER......................................	EA	1

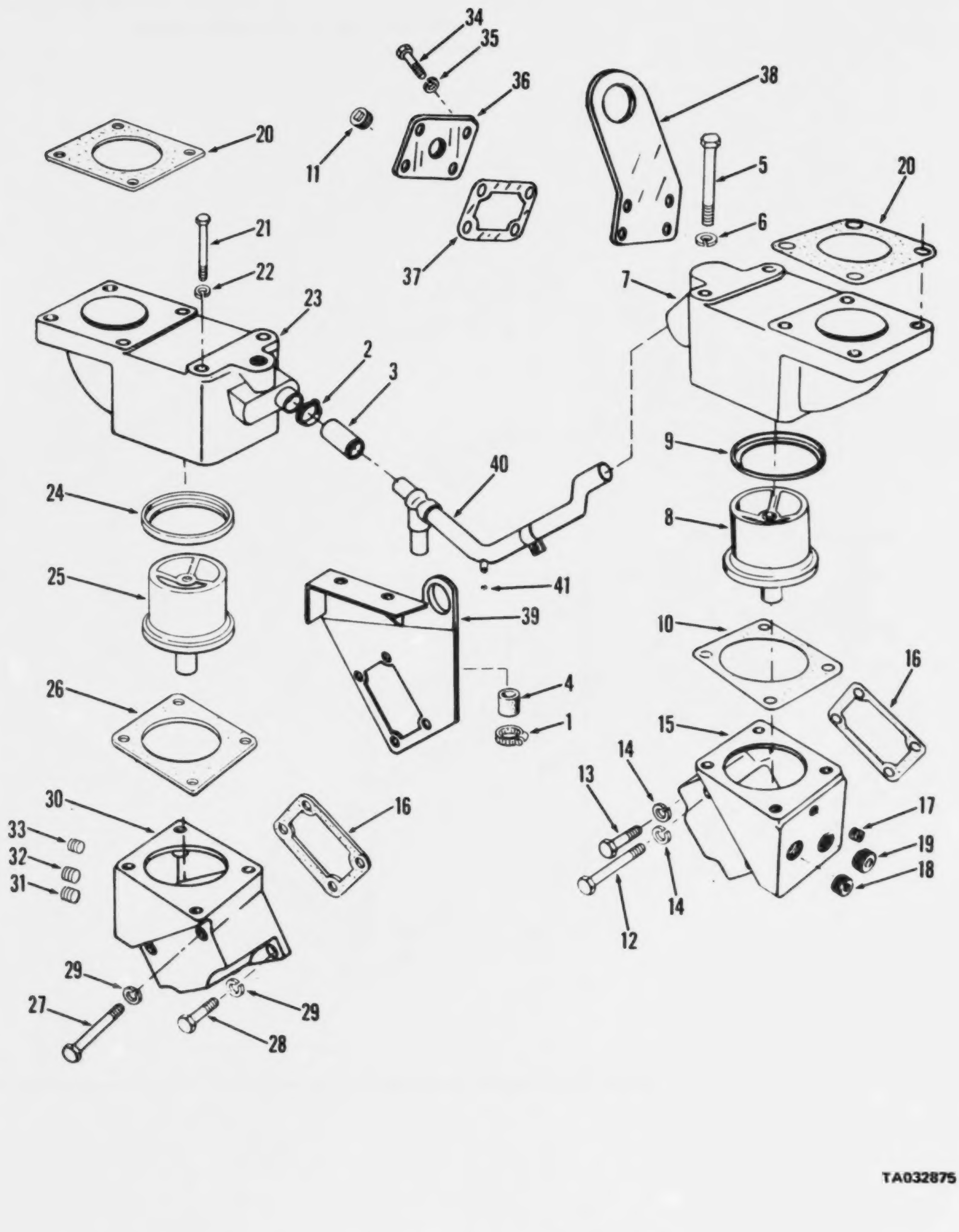

Figure 224. Thermostat and housing

(1) ILLUSTRATION (a) FIG NO.	(b) ITEM NO.	(2) SMR CODE	(3) NATIONAL STOCK NUMBER	(4) PART NUMBER	(5) FSCM	(6) DESCRIPTION USABLE ON CODE	(7) U/M	(8) QTY INC IN UNIT
						FUNCTIONAL GROUP 68 ENGINE ASSEMBLY, CARRIER		
224	1	PAOZZ	4730-00-702-2750	438288	15434	..CLAMP HOSE HOUSING	EA	4
224	2	PAOZZ		WMC44C	81348	..CLAMP,HOSE HOUSING	EA	2
224	3	PCOZZ	4720-00-519-9634	61554	15434	..HOSE RUBBER THERMO HSG	EA	2
224	4	XDOZZ		190229	15434	..HOSE RUBBER THERMO HSG	EA	1
224	5	XBOZZ	5305-00-269-3221	MS90725-71	96906	..SCREW,CAP,HEXAGON HOUSING THERMO	EA	2
224	6	PAOZZ	5310-00-637-9541	MS35338-46	96906	..WASHER,LOCK 3-8 THERMO HSG	EA	2
224	7	XDOZZ		156585	15434	..HOUSING THERMO HOUSING THERMO	EA	1
224	8	XDOZZ		1772A2	80625	..THERMOSTAT HOUSING THERMO	EA	1
224	9	KBOZZ		186780	15434	..SEAL THERMOSTAT HOUSING THERMO	EA	1
224	10	XDOZZ		189565	15434	..GASKET THERMO HSG HOUSING THERMO	EA	1
224	11	XBOZZ	4730-00-042-6318	5908	15434	..PLUG,PIPE HOUSING THERMO 3-8 NPT	EA	1
224	12	XBOZZ	5305-00-269-3221	MS90725-71	96906	..SCREW,CAP,HEXAGON 3-8-16X1-1-4 HOUSING	EA	2
224	13	XBOZZ	5305-00-269-3213	MS90725-62	96906	..SCREW,CAP,HEXAGON 3-8-16X1-1-4 TO CYL	EA	2
224	14	XBOZZ	5310-00-637-9541	MS35338-46	96906	..WASHER,LOCK 3-8 HOUSING	EA	2
224	15	XDOZZ		189551	15434	..ADAPTER THERMO HSG TO CYL HD	EA	1
224	16	KBOZZ		180381	15434	..GASKET THERMO HSG HOUSING THERMO	EA	1
224	17	XBOZZ	4730-00-042-6318	5908	15434	..PLUG,PIPE 3-8NPT HSG	EA	1
224	18	XBOZZ	4730-00-018-9566	55118	15434	..PLUG,PIPE HOUSING THERMO 1-8 NPT	EA	1
224	19	XBOZZ	4730-00-801-8186	5915A	15434	..PLUG,PIPE HOUSING THERMO 1-2 NPT	EA	2
224	20	KBOZZ		189566	15434	..GASKET WTR OUT THERMOSTAT	EA	2
224	21	XBOZZ	5305-00-269-3221	MS90725-71	96906	..SCREW,CAP,HEXAGON 3-8-16X1-1-4 ADAPTER	EA	2
224	22	PAOZZ	5310-00-637-9541	5604	15434	..WASHER,LOCK 3-8 TO CYL HEAD	EA	1
224	23	XDOZZ		156585	15434	..HOUSING THERMO HOUSING THERMO	EA	1
224	24	KBOZZ	5330-00-864-5422	186780	15434	..SEAL:THERMOSTAT,HOUSING,PART OF KIT PIN AR51950	EA	1
224	25	XDOZZ		1-772-A2	80625	..THERMOSTAT HOUSING THERMO	EA	1
224	26	KBOZZ		189565	15434	..GASKET THERMO HOUSING THERMO	EA	1
224	27	XBOZZ	5305-00-269-3215	MS90725-65	96906	..SCREW,CAP,HEXAGON 3-8-16X1-3-4 TO CYL	EA	1
224	28	XBOZZ	5305-00-404-1388	51958	15434	..SCREW,CAP,HEXAGON 3-8-16X TO CYL HEAD	EA	1
224	29	XBOZZ	5310-00-637-9541	MS35338-46	96906	..WASHER,LOCK 3-8 ADAPTER	EA	2
224	30	XDOZZ		189561	15434	..ADAPTER HOUSING HOUSING THERMO	EA	1
224	31	XBOZZ	4730-00-018-9566	55118	15434	..PLUG,PIPE HOUSING THERMO	EA	1
224	32	XBOZZ	4730-00-289-4770	5995	15434	..PLUG,PIPE HOUSING THERMO	EA	1
224	33	XBOZZ	4730-00-042-6318	5908	15434	..PLUG,PIPE HOUSING THERMO	EA	1
224	34	XBOZZ	5305-00-543-2419	51728	15434	..SCREW,CAP,HEXAGON 3-8-16X PLATE	EA	1
224	35	XBOZZ	5310-00-637-9541	MS35338-46	96906	..WASHER,LOCK 3-8 PLATE	EA	1
224	36	XDOZZ		187437	15434	..PLATE,BRACKET,HOUSING,THERMOSTAT	EA	1
224	37	KBOZZ		180381	15434	..GASKET ADAPTER THERMOSTAT	EA	1

(1) ILLUSTRATION (a) FIG NO.	(b) ITEM NO.	(2) SMR CODE	(3) NATIONAL STOCK NUMBER	(4) PART NUMBER	(5) FSCM	(6) DESCRIPTION USABLE ON CODE	(7) U/M	(8) QTY INC IN UNIT
224	40	XDOZZ		AR9313	15434	..CONNECTION WTR HOUSING THERMO............................	EA	1
224	41	XBOZZ	4730-00-801-8186	S915A	15434	..PLUG,PIPE HOUSING THERMO................................	EA	1

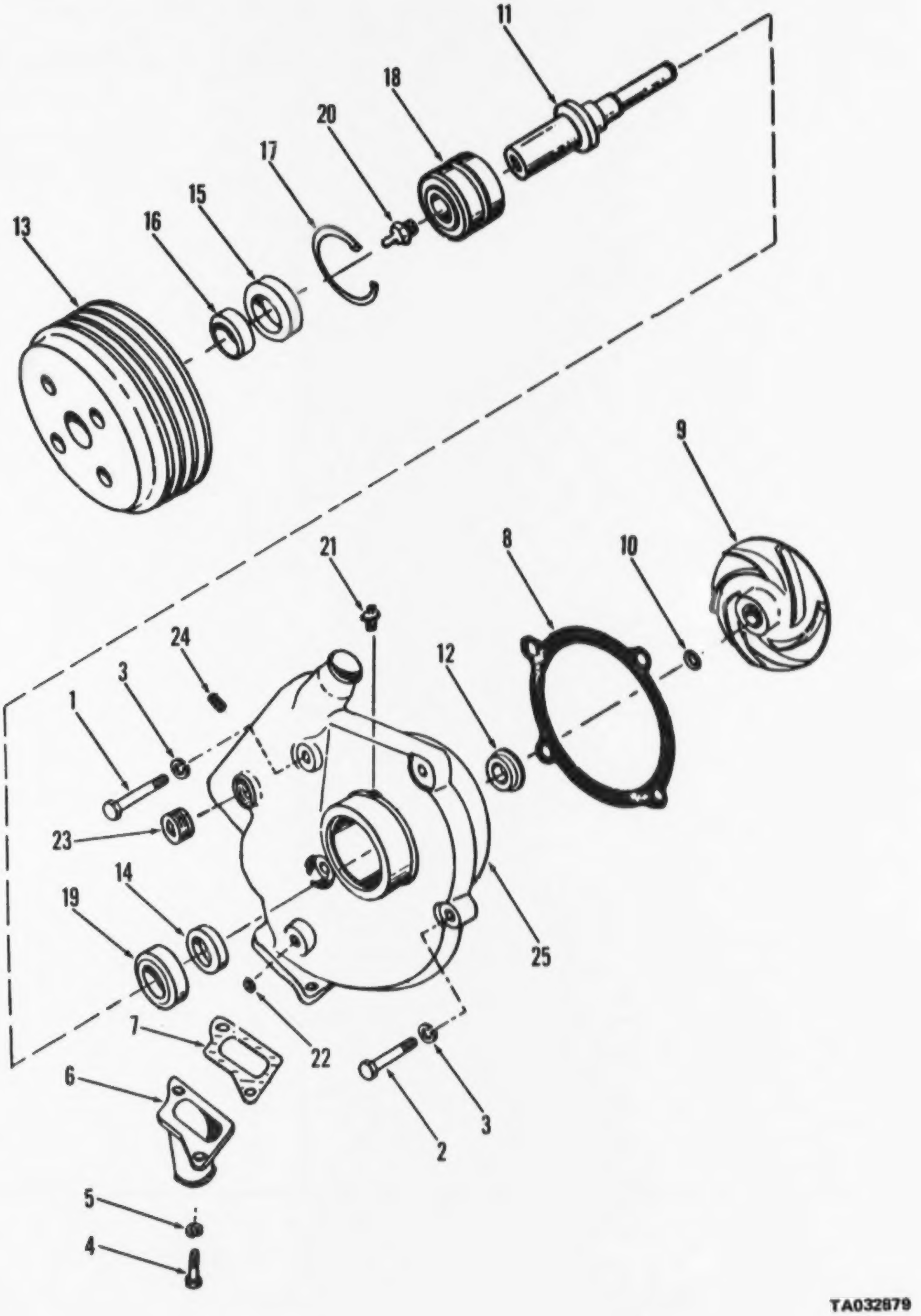

Figure 228. Pump assembly, water

(1) ILLUSTRATION (a) FIG NO.	(b) ITEM NO.	(2) SMR CODE	(3) NATIONAL STOCK NUMBER	(4) PART NUMBER	(5) FSCM	(6) DESCRIPTION USABLE ON CODE	(7) U/M	(8) QTY INC IN UNIT
						FUNCTIONAL GROUP 68 ENGINE ASSEMBLY, CARRIER		
229	6	XDOZZ		214189	15434	..CONNECTION WTR INLET....................................	EA	1
228	7	KBOZZ		196564	15434	..GASKET INLET CONN WATER PUMP MTG........................	EA	1
228	20	XBOZZ	4730-00-164-1923	52268	15434	...FITTING LUBRICATION WATER PUMP.........................	EA	1
229	21	XDOZZ		191175	15434	...FITTING LUBE WATER PUMP................................	EA	1

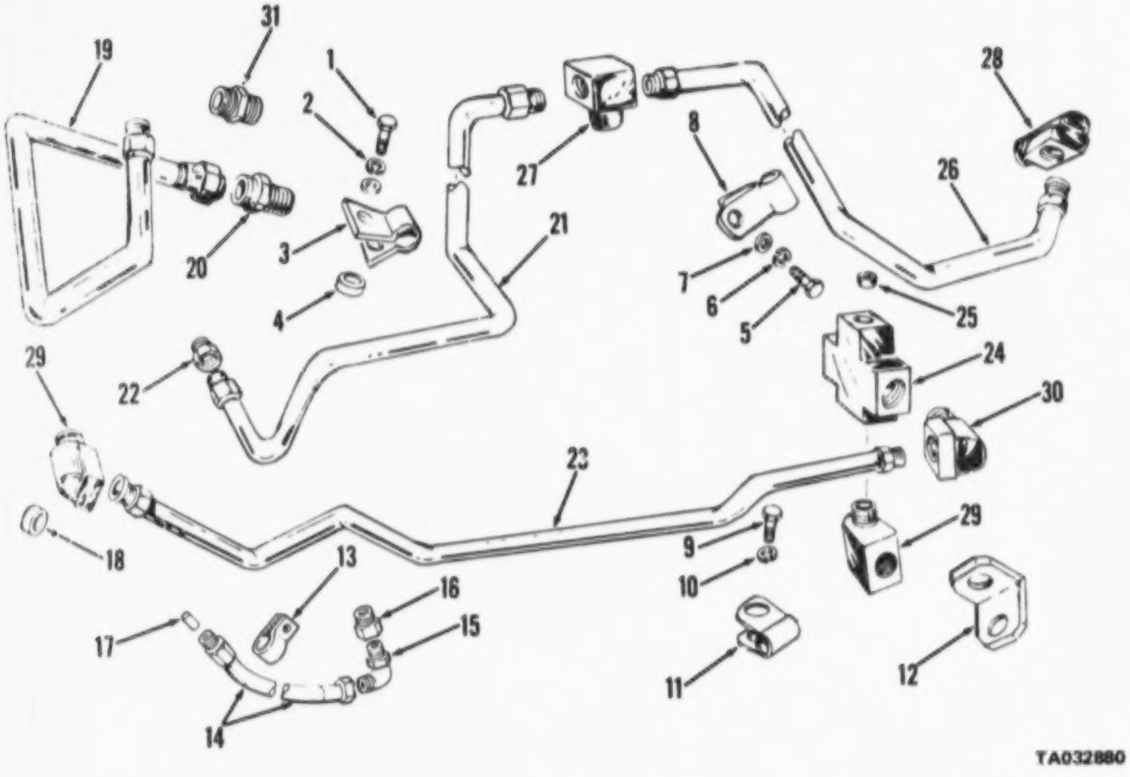

Figure 229. Valve, hoses and tubes, fuel

(1) ILLUSTRATION (A) FIG NO.	(B) ITEM NO.	(2) SMR CODE	(3) NATIONAL STOCK NUMBER	(4) PART NUMBER	(5) FSCM	(6) DESCRIPTION USABLE ON CODE	(7) U/M	(8) QTY INC IN UNIT
						FUNCTIONAL GROUP 68 ENGINE ASSEMBLY, CARRIER		
229	1	PAOZZ	5305-00-091-4012	51818	15434	..SCREW CAP HEX FUEL TUBING CLAMP	EA	1
229	2	PAOZZ	5310-00-562-6553	5602	15434	..WASHER,FLAT FUEL TUBING CLAMP	EA	1
229	3	PAOZZ	5340-00-719-4601	180272	15434	..CLAMP LOOP FUEL TUBING	EA	1
229	4	XBOZZ		114850	15434	..SPACER CLAMP FUEL TUBING	EA	4
229	5	XBOZZ		8181B	15434	..SCREW,CAP,HEX HD	EA	1
229	6	PAOZZ	5310-00-637-9541	MS35338-46	96906	..WASHER,LOCK 3-8 CLAMP	EA	1
229	7	XBOZZ		8602	15434	..WASHER,LOCK 13/32	EA	1
229	8	PAOZZ	5340-00-400-9449	108722	15434	..CLAMP,HOSE FUEL TUBING	EA	2
229	9	PAOZZ	5305-00-269-3226	MS90725-74	96906	..SCREW,CAP,HEXAGON FUEL TUBING CLAMP	EA	2
229	10	XBOZZ		8604	15434	..WASHER,LOCK: 13/32,WASHER	EA	1
229	11	PAOZZ	5340-00-080-4165	70468	15434	..CLAMP LOOP FUEL TUBING	EA	1
229	12	XBOZZ		68150	15434	..SUPPORT SUCT LINE FUEL TUBING	EA	1
229	13	PAOZZ	5340-00-719-4601	180272	15434	..CLAMP LOOP FUEL TUBING	EA	2
229		PCOZZ		A5040330055	15434	..HOSE FUEL FUEL TUBING	EA	1
229	15	PAOZZ	4730-00-763-4161	203071	15434	..ELBOW,TUBE FUEL TUBING	EA	1
229	16	XBOZZ		5964	15434	..BUSHING PIPE FUEL TUBING	EA	1
229	17	PAOZZ	4730-01-072-7699	65187	15434	..NIPPLE PIPE FUEL TUBING	EA	1
229	18	XBOZZ		64709	15434	..SPACER FILT BRKT FUEL TUBING	EA	2
229	19	XBOZZ		185814	15434	..TUBE FUEL DRAIN FUEL TUBING	EA	1
229	20	XBOZZ		8964	15434	..BUSHING,PIPE	EA	1
229	21	XBOZZ		196644	15434	..TUBE FUEL SUPPLY FUEL TUBING	EA	1
229	22	XBOZZ		148976	15434	..CONNECTOR TUBE FUEL TUBING	EA	1
229	23	PAOZZ	4730-00-722-1156	5946	15434	..NIPPLE PIPE FUEL TUBING MANIFOLD	EA	1
229	24	XBOZZ		175850	15434	..MANIFOLD FUEL FUEL TUBING	EA	1
229	25	PAOZZ	4730-00-142-1851	55108	15434	..PLUG,PIPE FUEL TUBING	EA	1
229	26	XBOZZ		196645	15434	..TUBE FUEL SUPPLY FUEL TUBING	EA	1
229	27	PAOZZ	4730-01-092-4372	51056	15434	..TEE,TUBE FUEL TUBING	EA	1
229	28	XBOZZ		51004	15434	..ELBOW TUBING FUEL TUBING	EA	2
229	29	XBOZZ		185347	15434	..ELBOW TUBE FUEL TUBING	EA	1
229	30	PAOZZ	4730-00-254-6225	361711	36161	..ELBOW,HOSE FUEL TUBING	EA	1
229	31	PAOZZ	4820-00-471-0049	178075	15434	..VALVE,CHECK FUEL TUBING	EA	1

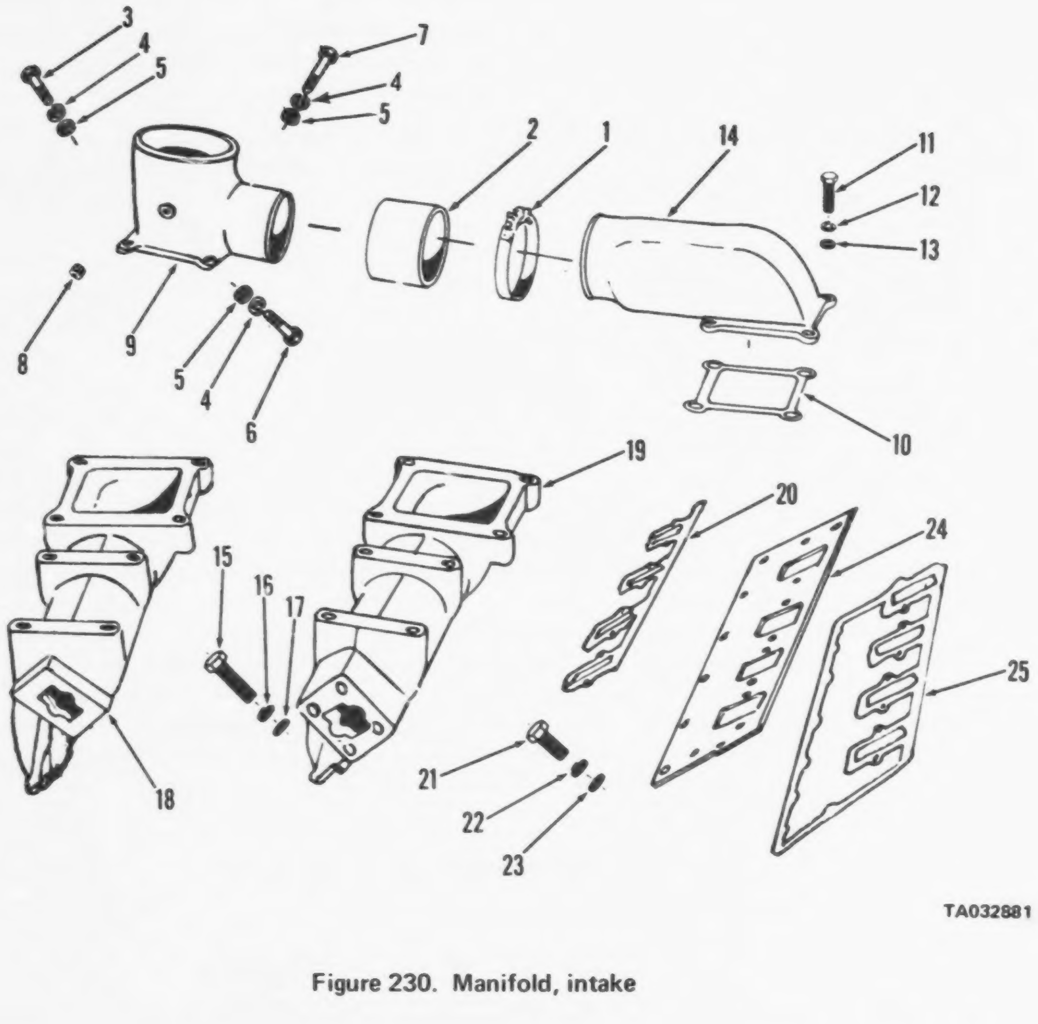

Figure 230. Manifold, intake

(1) ILLUSTRATION (a) FIG NO.	(b) ITEM NO.	(2) SMR CODE	(3) NATIONAL STOCK NUMBER	(4) PART NUMBER	(5) FSCM	(6) DESCRIPTION USABLE ON CODE	(7) U/M	(8) QTY INC IN UNIT
						FUNCTIONAL GROUP 68 ENGINE ASSEMBLY,		
						CARRIER		
230	8	XDOZZ	4730-00-018-9566	55118	15434	..PLUG,PIPE INTAKE MANIFOLD..............................	EA	1

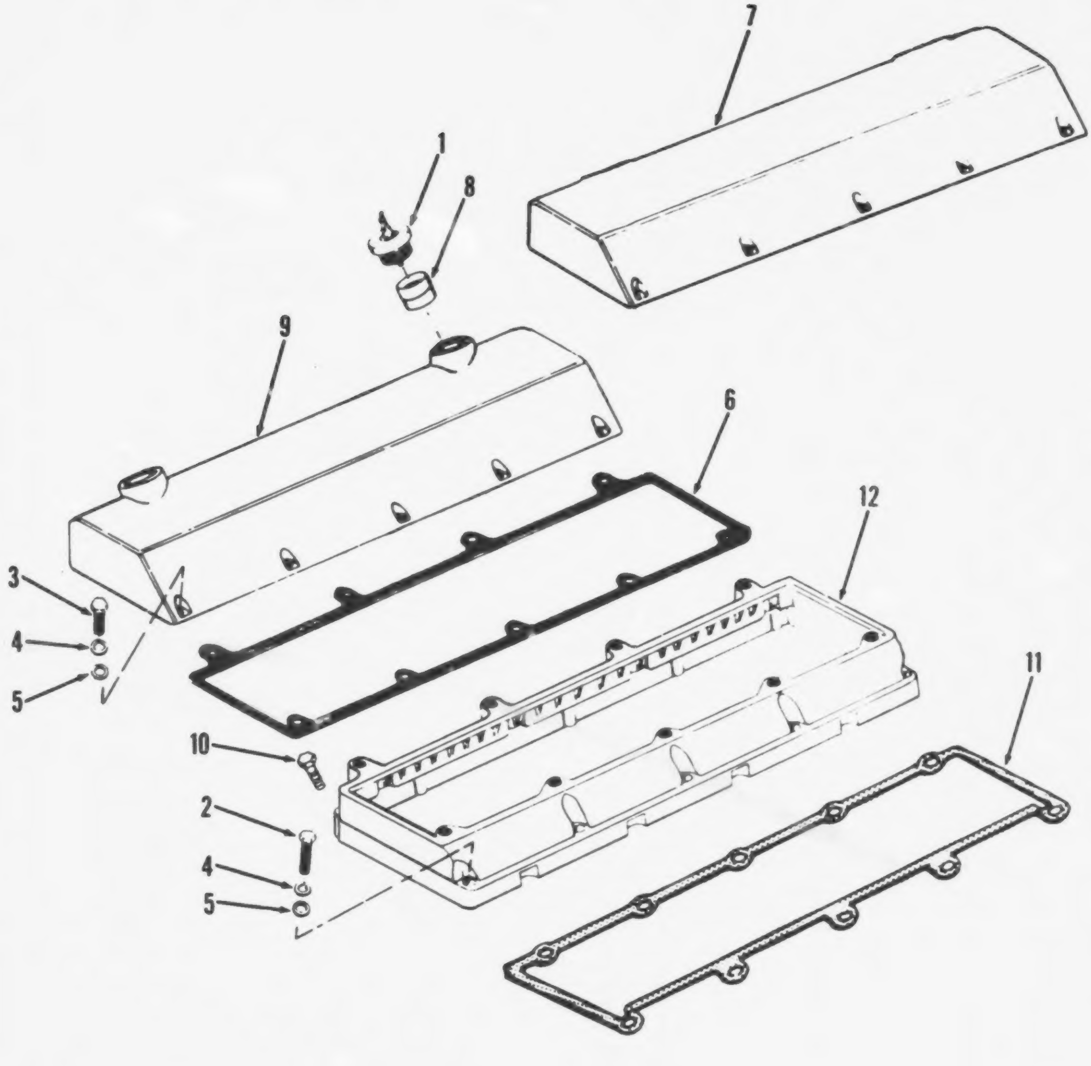

Figure 236. Cover, cylinder head

(1) ILLUSTRATION		(2)	(3)	(4)	(5)	(6)	(7)	(8)
(a) FIG NO.	(b) ITEM NO.	SMR CODE	NATIONAL STOCK NUMBER	PART NUMBER	FSCM	DESCRIPTION USABLE ON CODE	U/M	QTY INC IN UNIT
						FUNCTIONAL GROUP 60 ENGINE ASSEMBLY,		
						CARRIER		
236	1	PAOZZ	2990-00-573-0470	167981	15434	..CAP,FILLER OPENING COVER CYH HD MTG......................	EA	1

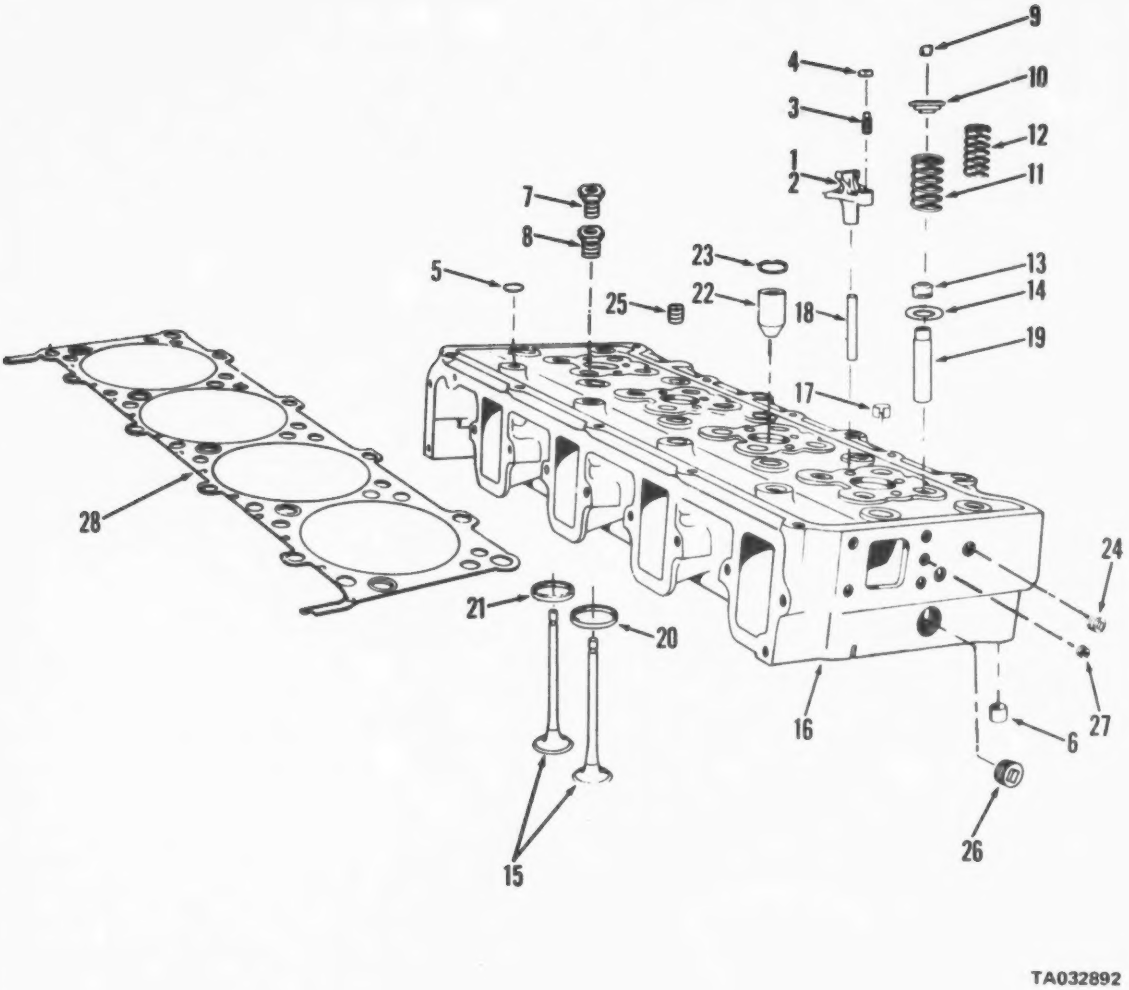

Figure 240. Head assembly

(1) ILLUSTRATION (a) FIG NO.	(b) ITEM NO.	(2) SMR CODE	(3) NATIONAL STOCK NUMBER	(4) PART NUMBER	(5) FSCM	(6) DESCRIPTION USABLE ON CODE	(7) U/M	(8) QTY INC IN UNIT
						FUNCTIONAL GROUP 68 ENGINE ASSEMBLY, CARRIER		
240	24	PAOZZ	4730-00-142-1851	5510R	15434	...PLUG PIPE HEAD W/O VALVES..................................	EA	1
240	26	PAOZZ	4730-00-289-4770	5995	15434	...PLUG,PIPE HEAD W/O VALVES..................................	EA	15
240	27	PAOZZ	5340-00-721-5329	7C455	15434	...PLUG,FUSIBLE HEAD W/O VALVES...............................	EA	1

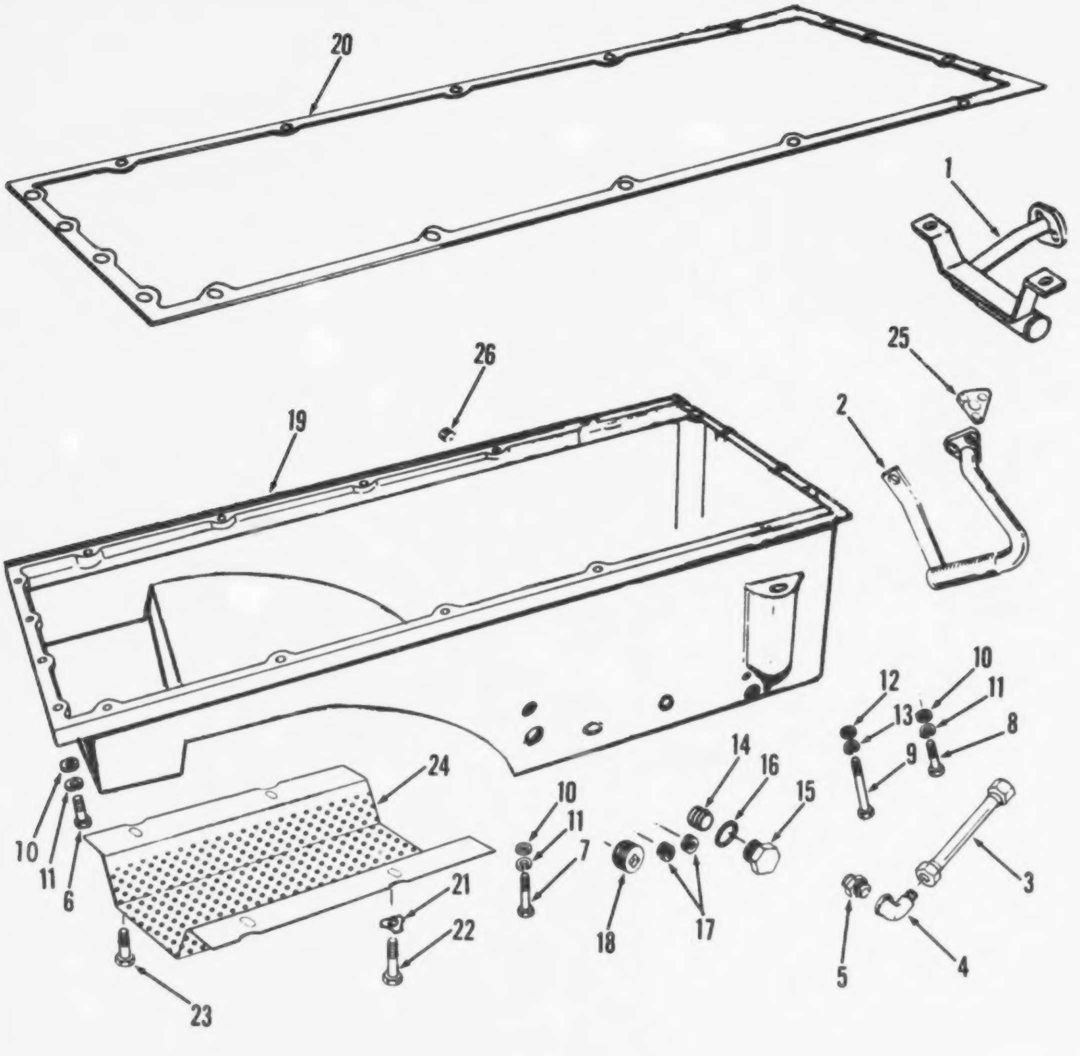

Figure 243. Pan, oil

(1) ILLUSTRATION (a) FIG NO.	(b) ITEM NO.	(2) SMR CODE	(3) NATIONAL STOCK NUMBER	(4) PART NUMBER	(5) FSCM	(6) DESCRIPTION USABLE ON CODE	(7) U/M	(8) QTY INC IN UNIT
						FUNCTIONAL GROUP 68 ENGINE ASSEMBLY,		
						CARRIER		
243	14	XDOZZ	5340-01-C35-0196	200845	15434	...INSERT,HELICOIL OIL PAN..................................	EA	2
243	15	XBOZZ	5365-00-708-3434	110907	15434	...PLUG DRAIN OIL PAN...	EA	2
243	16	XBOZZ	5365-00-197-9327	67946	15434	...GASKET:PLUG,PART OF KIT P/N AR51949......................	EA	2
		KBOZZ		67946	15434	...GASKET PLUG DRAIN PLUG....................................	EA	2
243	17	XBOZZ	4730-00-042-6318	5508	15434	...PLUG,PIPE OIL PAN..	EA	4
243	18	XBOZZ	4730-00-044-4715	5562	15434	...PLUG PIPE 1 IN OIL PAN....................................	EA	2
243	26	XBOZZ		214184	15434	..PLUG,PIPE OIL PAN...	EA	1

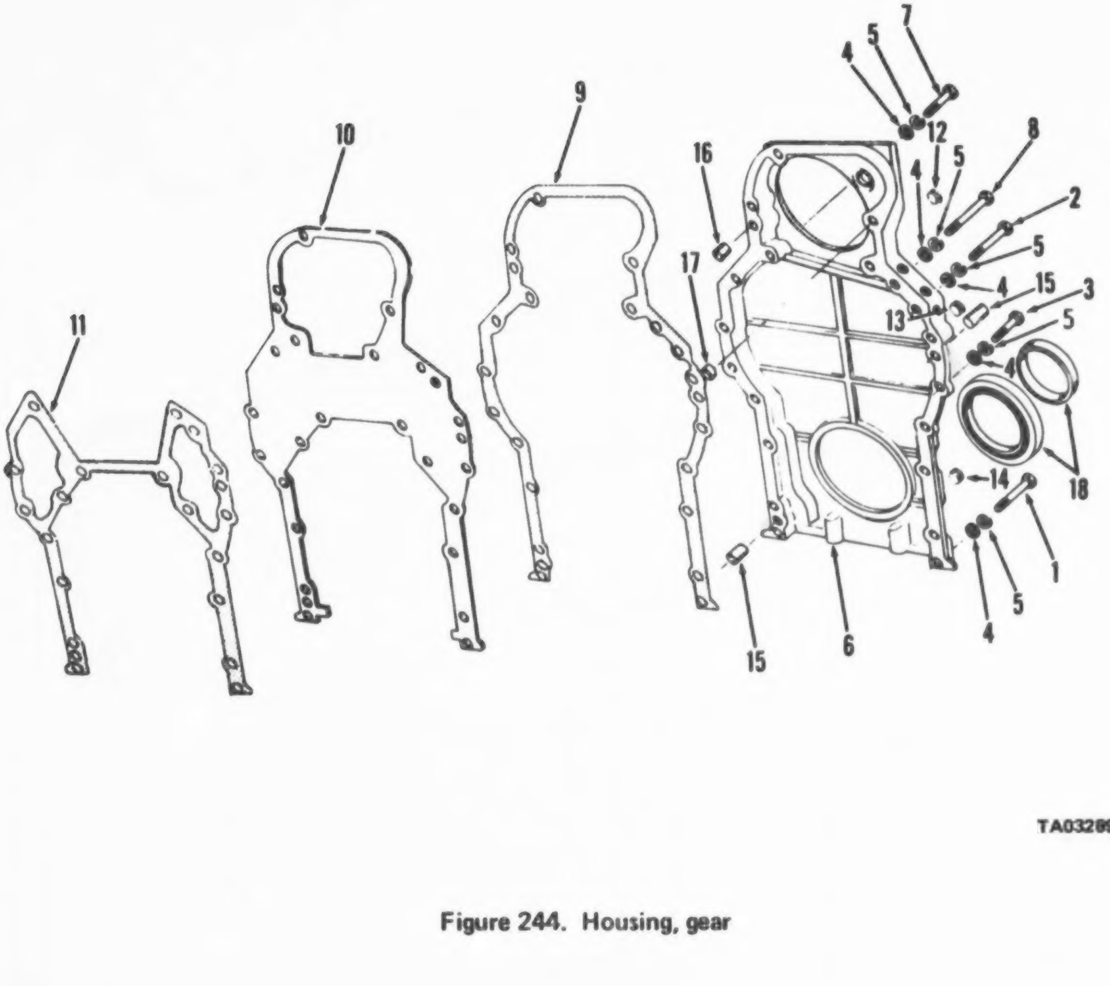

Figure 244. Housing, gear

(1) ILLUSTRATION (a) FIG NO.	(b) ITEM NO.	(2) SMR CODE	(3) NATIONAL STOCK NUMBER	(4) PART NUMBER	(5) FSCM	(6) DESCRIPTION USABLE ON CODE	(7) U/M	(8) QTY INC IN UNIT
						FUNCTIONAL GROUP 68 ENGINE ASSEMBLY, CARRIER		
244	12	PAOZZ	4730-00-142-1851	S9108	15434	..PLUG PIPE GEAR HSG	EA	2
244	13	PAOZZ	4730-00-018-9566	S9118	15434	..PLUG,PIPE GEAR HSG	EA	1
244	14	PAOZZ	4730-00-289-4770	S995	15434	..PLUG,PIPE GEAR HSG	EA	1

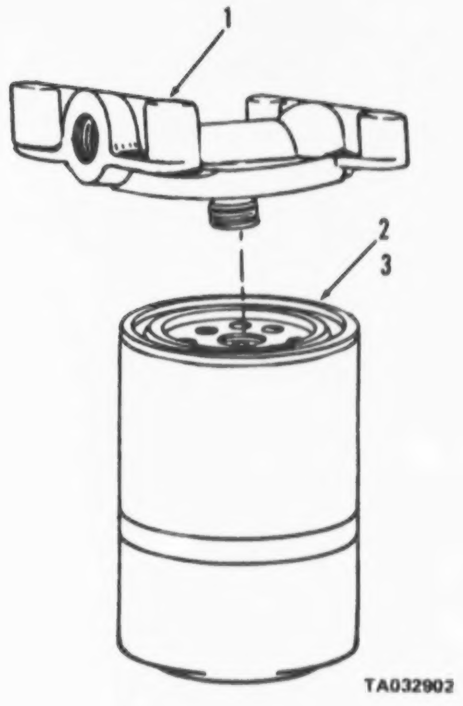

Figure 250. Corrosion resistor assembly

(1) ILLUSTRATION (a) FIG NO.	(b) ITEM NO	(2) SMR CODE	(3) NATIONAL STOCK NUMBER	(4) PART NUMBER	(5) FSCM	(6) DESCRIPTION USABLE ON CODE	(7) U/M	(8) QTY INC IN UNIT
						FUNCTIONAL GROUP 68 ENGINE ASSEMBLY, CARRIER		
250		XDOZZ		258264	15434	..RESISTOR CRSN WATER	EA	1
250	1	XBOZZ		204163	15434	...HEAD CRSN RES WATER	EA	1
250	2	PAOZZ	4330-00-274-4712	WF2051	33457	...RESISTOR SERV CORROSION	EA	1
250	3	PAOZZ	4330-01-046-4642	WF-2013	33457	...RESISTOR PRCH CORROSION	EA	1

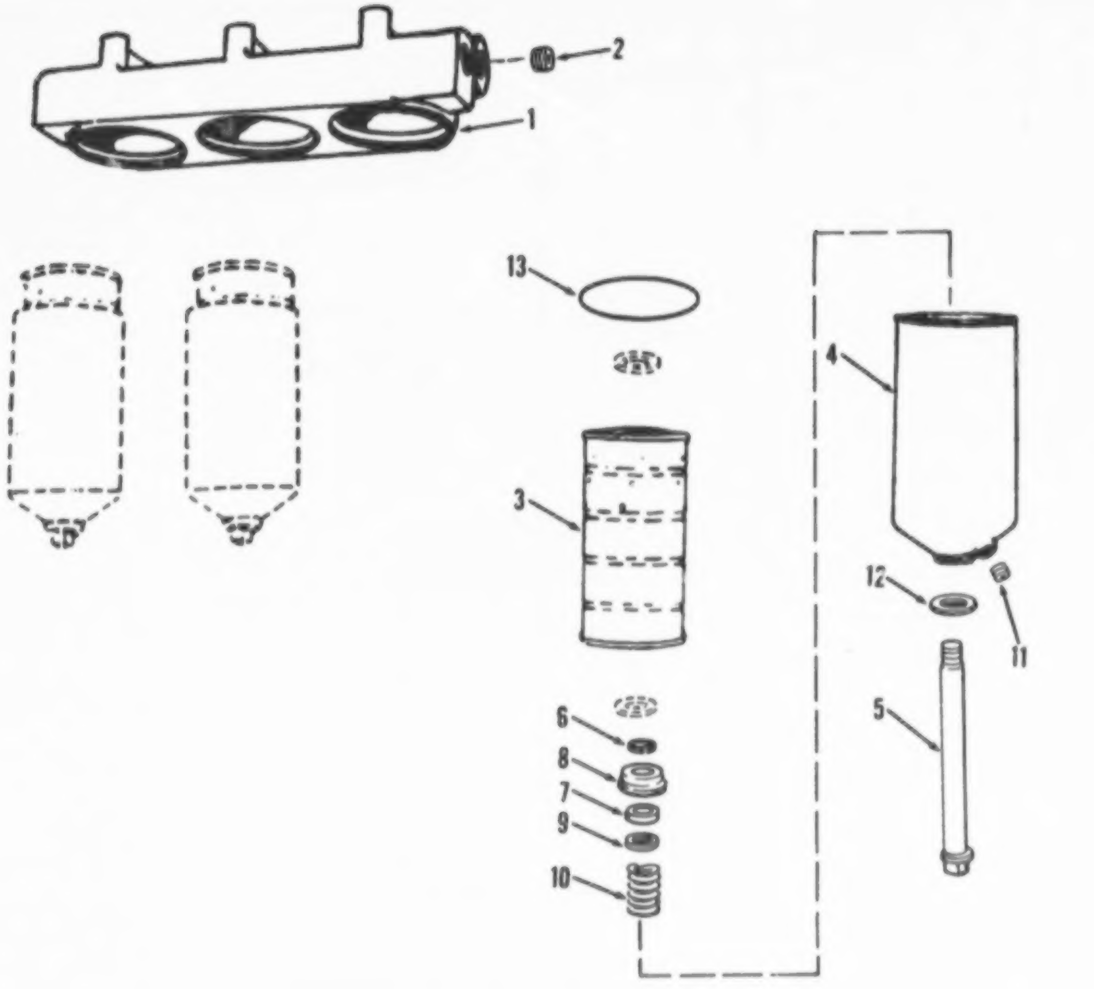

TA032903

Figure 251 Filter assembly

(1) ILLUSTRATION (a) FIG NO.	(b) ITEM NO.	(2) SMR CODE	(3) NATIONAL STOCK NUMBER	(4) PART NUMBER	(5) FSCM	(6) DESCRIPTION USABLE ON CODE	(7) U/M	(8) QTY INC IN UNIT
						FUNCTIONAL GROUP 68 ENGINE ASSEMBLY, CARRIER		
251		PAOZZ	2940-01-026-6205	AP12707	15434	..FILTER,OIL ENGINE	EA	1
251	1	XDOZZ		218505	15434	...HEAD OIL FILTER ENGINE	EA	1
251	2	XBOZZ	4730-00-044-4719	5967	15434	...PLUG PIPE HEAD	EA	1
251		XDOZZ		232510	73370	...BODY FILTER OIL	EA	3
251	3	PAOZZ	2940-00-580-6287	CH33PLMIL	73370	....FILTER,ELEMENT FILTER	EA	1
251	4	XAOZZ		142884	73370	....BODY ASSY FILTER	EA	1
251	5	XDOZZ		142383	73370	....BOLT CENTER OIL FILTER	EA	1
251	6	XDOZZ		104695	73370	....RING RETAINER FILTER	EA	1
251	7	PAOZZ	2940-00-074-8865	104500	73370	....SEAL OIL CENTER POST	EA	1
251	8	XDOZZ		104501	73370	....ADAPTER FILTER OIL	EA	1
251	9	XDOZZ		104395	73370	....WASHER POST FILTER	EA	1
251	10	XDOZZ		104358	73370	....SPRING ELEMENT OIL FILTER	EA	1
251	11	XBOZZ	4730-00-451-1010	105108	73370	....PLUG,PIPE OIL FILTER	EA	1
251	12	PAOZZ	5330-00-253-3335	106326	73370	....SEAL FILTER OIL FILTER	EA	1
251	13	PAOZZ	5330-00-718-7385	104503	73370	....GASKET,BASE OIL FILTER	EA	1
251		XDOZZ	2815-00-131-1700	153526	15434	....SEAT VALVE BYPASS	EA	1
251	17	PAOZZ	2940-00-400-5185	200815	15434	....DISC BY PASS VALVE	EA	1
251	18	XDOZZ		167165	15434	....SPRING BYPASS VALVE	EA	1
251	19	PAOZZ	4730-00-120-4834	143087	15434	....ADAPTER VALVE BYPASS	EA	3

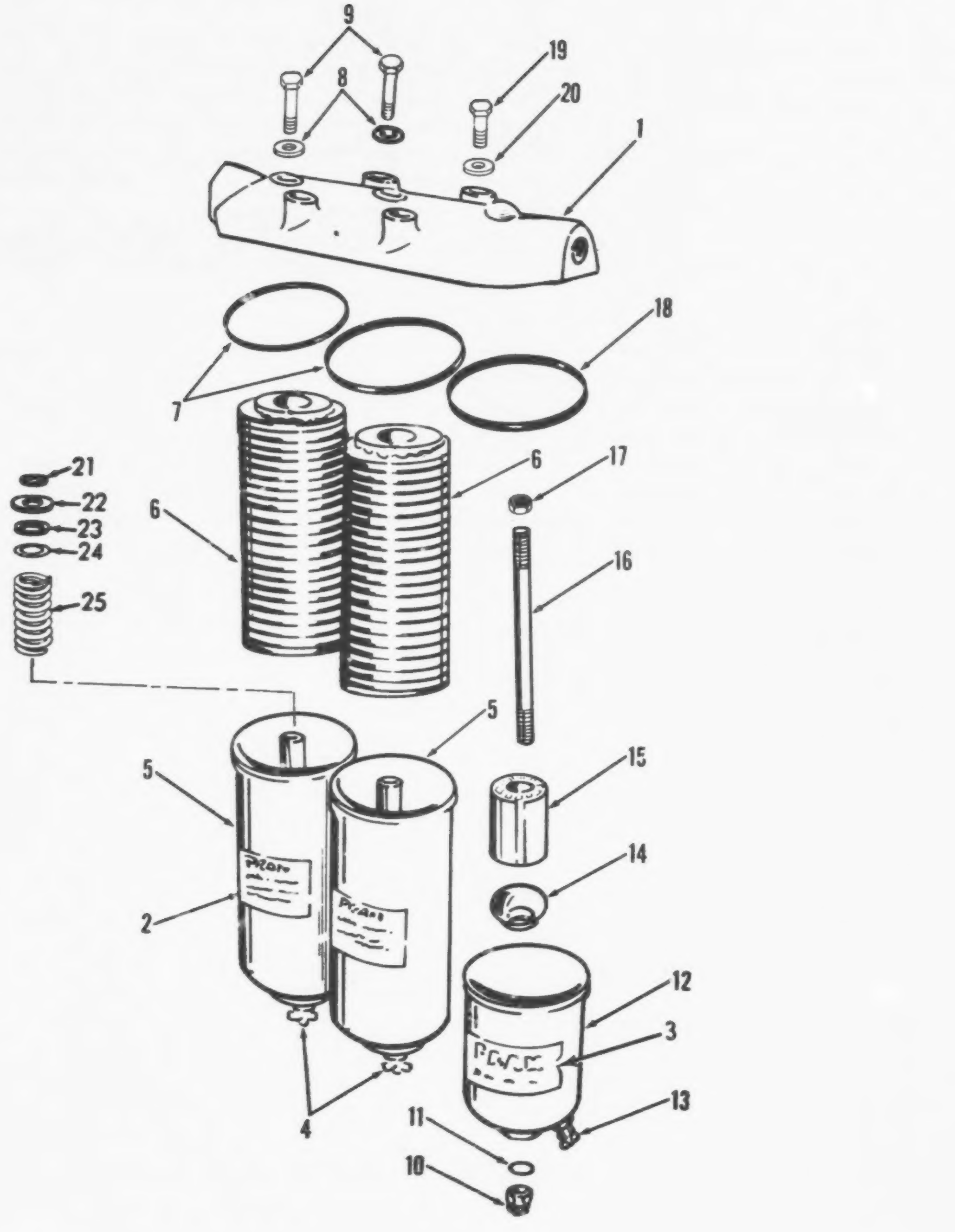

Figure 252. Filter assembly

(1) ILLUSTRATION (a) FIG NO.	(b) ITEM NO.	(2) SMR CODE	(3) NATIONAL STOCK NUMBER	(4) PART NUMBER	(5) FSCM	(6) DESCRIPTION USABLE ON CODE	(7) U/M	(8) QTY INC IN UNIT
						FUNCTIONAL GROUP 68 ENGINE ASSEMBLY, CARRIER		
252		PAOZZ	2910-00-799-0884	AR50535	15434	..FILTER,FUEL ENGINE	EA	1
252	1	PBOZZ	2910-00-863-9610	104623	15434	...HEAD FUEL FLTR ENGINE	EA	1
252	2	XDOZZ		200346	15434	....DECAL,FILTER	EA	2
252	3	XDOZZ		200347	15434	...DECAL FILTER ENGINE FUEL	EA	1
252		PBOZZ	2910-00-640-5622	107147	15434	...ELEMNT & BODY FILTER	EA	2
252	4	XBOZZ	4820-00-752-9040	106498	73370	....COCK,DRAIN FILTER	EA	1
252	5	XDOZZ		139472	73370	....BODY FUEL FLTR ENGINE	EA	1
252	6	PAOZZ	2910-00-287-1912	104750	15434	....FILTER ELEMENT FILTER	EA	1
252	7	PAOZZ	5330-00-663-4773	101485	73370	....GASKET FLT HD FUEL	EA	1
252	8	PAOZZ		104975	73370	GASKET SCREW CAP FILTER	EA	1
252	9	XDOZZ	5305-00-710-4195	MS90726-90	96906	....SCREW,CAP,HEXAGON FILTER HEAD	EA	1
252		XDOZZ		F1820CU2	73370	...ELEMENT & BODY FUEL FILTER	EA	1
252	10	XDOZZ	5310-00-784-0033	102458	73370	....NUT PLAIN,CAP FILTER BODY	EA	1
252	11	PAOZZ	5310-00-639-6385	151328	73370	....SEAL DYNA FILTER BODY	EA	1
252	12	XDOZZ	2910-00-787-6552	149557	73370	....BODY ASSY FILTER	EA	1
252	13	XBOZZ	4820-00-752-9040	106498	73370	....COCK,DRAIN FILTER	EA	1
252	14	XDOZZ		176366	73370	....RETAINER ASSY FILTER ELEMENT	EA	1
252	15	PAOZZ	2910-00-222-2216	35070	73370	....FILTER,ELEMENT FILTER	EA	1
252	16	XDOZZ		235816	73370	....STUD FILTER FUEL	EA	1
252	17	XDOZZ	5310-00-175-5031	151809	73370	....NUT,PLAIN,HEXAG CARTRIDGE	EA	1
252	18	PAOZZ	5330-00-663-4773	101489	73370	....GASKET HD-BDY FUEL FILTER	EA	1
252	19	XDOZZ	5305-00-942-2196	MS18154-60	96906	..SCREW,CAP,HEXAGON 3/8-16X1	EA	4
252	20	XDOZZ	5306-00-225-8510	MS90725-66	96906	..WASHER LOCK: 3/8	EA	1
252	21	PAOZZ	5365-00-807-2636	MS16625-1100	96906	..RING RETAING,BY PASS VALVE	EA	1

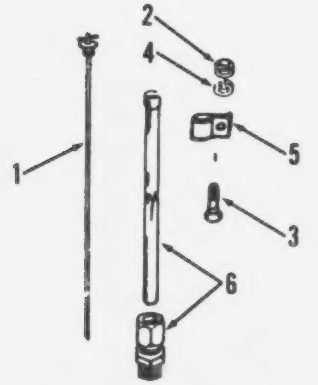

Figure 253. Dipstick, oil level

(1) ILLUSTRATION (a) FIG NO.	(b) ITEM NO.	(2) SMR CODE	(3) NATIONAL STOCK NUMBER	(4) PART NUMBER	(5) FSCM	(6) DESCRIPTION USABLE ON CODE	(7) U/M	(8) QTY INC IN UNIT
						FUNCTIONAL GROUP 68 ENGINE ASSEMBLY, CARRIER		
253	1	XDOZZ		214253	15434	..BAYONET OIL GAGE ENGINE	EA	1
253	2	XBOZZ	5310-00-521-8595	5223	15434	..NUT PLAIN HEX 3-8-16 CLAMP	EA	1
253	3	XBOZZ	5305-00-051-4006	137795	15434	..SCREW CAP HEX 3-8-16X5-8 CLAMP	EA	1
253	4	XBOZZ	5310-00-637-9541	MS35338-46	96906	..WASHER,LOCK 3-8 CLAMP	EA	1
253	5	XDOZZ		160861	15434	..SUPPORT TUBE OIL GAGE	EA	1
253	6	XDOZZ		180878	15434	..TUBE OIL GAGE ENGINE	EA	1

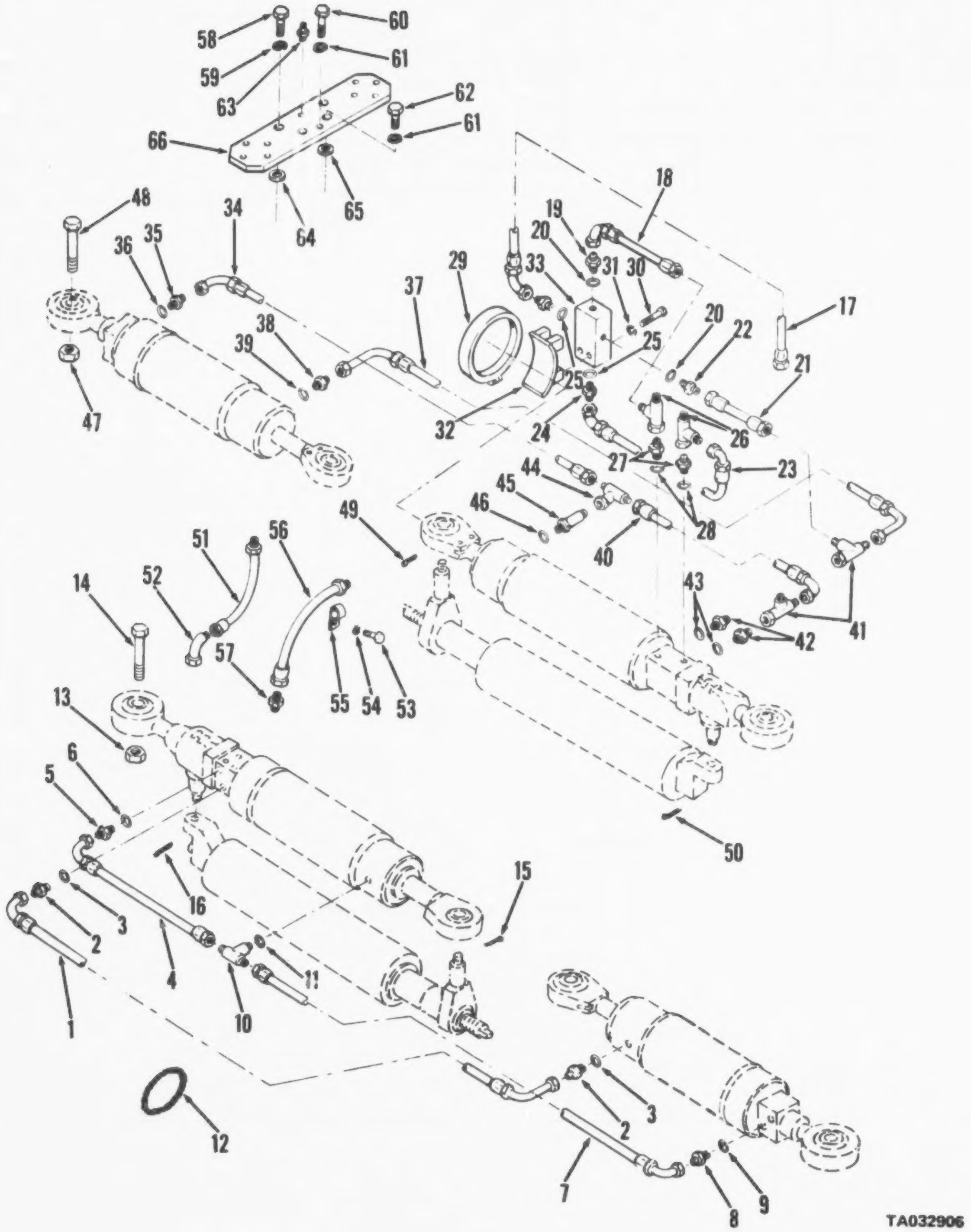

Figure 254. Hose assemblies, hydraulic

(1) ILLUSTRATION (a) FIG NO.	(b) ITEM NO.	(2) SMR CODE	(3) NATIONAL STOCK NUMBER	(4) PART NUMBER	(5) FSCM	(6) DESCRIPTION USABLE ON CODE	(7) U/M	(8) QTY INC IN UNIT
						FUNCTIONAL GROUP 69 CYLINDERS AND COMPONENT PARTS,STEERING FRONT AND REAR		
254	1	PCOZZ	4720-01-033-2096	44027701	27315	.HOSE ASSEMBLY CYLINDER TO CYLINDER..........................	EA	1
254	2	PAOZZ	4730-01-017-8287	MS35324-6-5	96906	.ADAPTER CYLINDER HOSE 37 DEGREE FLARE TO.O RING BOSS........	EA	2
254	3	PCOZZ	5330-00-808-0794	MS28778-8	96906	.PACKING,PREFORMED HOSE ADAPTER..............................	EA	2
254	4	PCOZZ		44027509	27315	.HOSE ASSEMBLY STEERING CYLINDER.............................	EA	1
254	5	PAOZZ	4730-01-017-8287	MS35324-6-5	96906	.ADAPTER HOSE 37 DEGREE FLARE................................	EA	1
254	6	PCOZZ	5330-00-808-0794	MS28778-8	96906	.PACKING,PREFORMED ADAPTER...................................	EA	1
254	7	PCOZZ	4720-01-033-9718	44027508	27315	.HOSE ASSEMBLY STEERING CYLINDER.............................	EA	1
254	8	PAOZZ	4730-01-017-8287	MS35324-6-5	96906	.ADAPTER HOSE HOSE TO CYLINDER...............................	EA	1
254	9	PAOZZ	5330-00-808-0794	MS28778-8	96906	.PACKING,PREFORMED ADAPTER...................................	EA	1
254	10	PAOZZ	4730-00-933-0742	442486-06	27315	.TEE,TUBE,TO BOSS HOSE TO CYLINDER TEE.......................	EA	1
254	11	PCOZZ	5330-00-808-0794	MS28778-8	96906	.PACKING,PREFORMED TEE BRANCH................................	EA	1
254	12	PACZZ	5360-00-598-6625	17012	27315	.SPRING,HELICAL HOSE SUPPORT.................................	EA	1
254	17	XDOZZ	4720-01-025-8659	44034701	27315	.HOSE ASSEMBLY VALVE TO TEE..................................	EA	1
254	18	XDOZZ		44027609	27315	.HOSE ASSEMBLY VALVE TO TEE..................................	EA	1
254	19	PAOZZ	4730-01-017-8287	MS35324-6-5	96906	.ADAPTER HOSE TO VALVE.......................................	EA	2
254	20	PAOZZ	5330-00-808-0794	MS28778-8	96906	.PACKING,PREFORMED ADAPTER...................................	EA	2
254	21	XDOZZ		44027702	27315	.HOSE ASSEMBLY VALVE TO TEE..................................	EA	1
254	22	PAOZZ	4730-01-017-8287	MS35324-6-5	96906	.ADAPTER HOSE HOSE TO VALVE..................................	EA	1
254	23	PCOZZ	4720-01-025-8659	44034701	27315	.HOSE ASSEMBLY VALVE TO TEE..................................	EA	1
254	24	PACZZ	4730-01-017-8287	MS39324-6-5	96906	.ADAPTER HOSE VALVE TO TEE...................................	EA	1
254	25	PCOZZ	5330-00-808-0794	MS28778-8	96906	.PACKING,PREFORMED ADAPTER...................................	EA	2
254	26	PAOZZ	4730-00-074-0713	MS51523A8	96906	.TEE,TUBE HOSE TO CYLINDER...................................	EA	2
254	27	PAOZZ	4730-01-017-8287	MS35324-6-5	96906	.ADAPTER HOSE TO CYLINDER....................................	EA	1
254	28	PCOZZ	5330-00-808-0794	MS28778-8	96906	.PACKING,PREFORMED ADAPTER...................................	EA	2
254	29	XBOZZ		320441D16	27315	.CLAMP,HOSE: BRACKET MTG.....................................	EA	2
254	30	PBOZZ	5306-00-051-4081	MS90727-35	96906	.BOLT,MACHINE VALVE MTG 5-16-24 X 1-3-4......................	EA	2
254	31	PAOZZ	5310-00-407-9566	MS35338-45	96906	.WASHER,LOCK VALVE MTG.......................................	EA	2
254	32	XDOZZ		816P680	27315	.BRACKET VALVE MTG...	EA	1
254	33	PAOZZ	2530-00-226-1183	100726C	27315	.VALVE ASSEMBLY BY-PASS......................................	EA	1
254	34	XDOZZ		44027609	27315	.HOSE ASSEMBLY STEERING CYLINDER.............................	EA	1
254	35	PAOZZ	4730-01-017-8287	MS35324-6-5	96906	.ADAPTER HOSE TO CYLINDER....................................	EA	1
254	36	PACZZ	5330-00-808-0794	MS28778-8	96906	.PACKING,PREFORMED ADAPTER...................................	EA	1
254	37	XDOZZ	4720-01-025-8659	44034701	27315	.HOSE ASSEMBLY CYLINDER TO CYLINDER..........................	EA	1
254	38	PACZZ		MS28778-6-5	96906	.ADAPTER HOSE TO CYLINDER....................................	EA	1
254	39	PAOZZ	5330-00-808-0794	MS28778-8	96906	.PACKING,PREFORMED ADAPTER...................................	EA	1
254	40	XDOZZ		44027602	27315	.HOSE ASSEMBLY TEE TO TEE....................................	EA	1
254	41	XDOZZ	4730-00-074-0713	MS51523A8	96906	.TEE,TUBE HOSE TO CYLINDER...................................	EA	2

(1) ILLUSTRATION (a) FIG NO.	(b) ITEM NO.	(2) SMR CODE	(3) NATIONAL STOCK NUMBER	(4) PART NUMBER	(5) FSCM	(6) DESCRIPTION USABLE ON CODE	(7) U/M	(8) QTY INC IN UNIT
254	42	PAOZZ	4730-01-017-8287	MS35324-6-5	96906	.ADAPTER TEE TO CYLINDER..	EA	2
254	43	PAOZZ	5330-00-808-0794	MS28778-8	96906	.PACKING,PREFORMED ADAPTER......................................	EA	2
254	44	PAOZZ	4730-00-125-2695	C5305X14	79470	.TEE,TUBE HOSE TO CYLINDER......................................	EA	1
254	45	PAOZZ	4730-00-435-8015	8FF5BXS	45681	.ADAPTER LONG TUBE TEE TO CYLINDER..............................	EA	1
254	46	PAOZZ	5330-00-808-0794	MS28778-8	96906	.PACKING,PREFORMED LONG TUBE ADAPTER............................	EA	1
254	47	PAOZZ	5310-00-515-6595	MS21083N22	96906	.NUT SELF LOCKING CYLINDER MTG 1-3-8 X 12.......................	EA	3
254	48	PAOZZ		132C8E6593	97403	.BOLT MACHINE ANCHOR..	EA	3
254	49	PAOZZ	5315-00-846-0126	MS24665-628	96906	.PIN COTTER CYLINDER MTG 1-4 INCH...............................	EA	1
254	50	PAOZZ	5315-00-298-1481	MS24665-357	96906	.PIN,COTTER CYLINDER MTG 1-8 INCH...............................	EA	1
254	51	XDOZZ		44Q22102	27315	.HOSE ASSEMBLY BREATHER...	EA	1
254	52	PAOZZ	4730-01-041-2676	44021901	27315	.ELBOW,PIPE BREATHER HOSE CONNECTION............................	EA	1
254	53	PAOZZ	5305-00-068-0500	MS90725-3	96906	.SCREW,CAP,HEX HD 1/4-20X1/2 HOSE CLAMP MTG.................	EA	1
254	54	PAOZZ	5310-00-582-5965	MS35338-44	96906	.WASHER,LOCK HOSE CLAMP MTG 1-4 INCH............................	EA	1
254	55	XDOZZ	5340-00-809-1494	MS21333-105	96906	.CLAMP LOOP BREATHER HOSE MTG...................................	EA	1
254	56	XDOZZ		44Q22102	27315	.HOSE ASSEMBLY BREATHER...	EA	1
254	57	PAOZZ	4730-00-439-1722	48X6X6	79470	.ADAPTER STRAIGHT BREATHER......................................	EA	1
254	58	PAOZZ	5305-00-947-4354	MS90728-191	96906	.SCREW,CAP,HEXAGON FENDER BASE MTG 3-4-10XX 3...................	EA	3
254	59	PAOZZ	5310-00-584-7888	MS35338-51	96906	.WASHER,LOCK FENDER BASE MTG 3-4 INCH...........................	EA	4
254	60	PAOZZ	5305-00-724-7220	MS90728-162	96906	.SCREW,CAP,HEXAGON FENDER BASE MTG 5-8-11XX 1-1-2...............	EA	1
254	61	PAOZZ	5310-00-820-6653	MS35338-50	96906	.WASHER,LOCK FENDER BASE MTG 5-8 INCH...........................	EA	1
254	62	PAOZZ	5305-00-903-7298	MS90725-185	96906	.SCREW,CAP,HEXAGON FENDER BASE MTG 3-4-10XX 2-1-2...............	EA	1
254	63	PAOZZ	4730-00-172-0049	MS15006-1	96906	.FITTING,LUBRICATION FENDER BASE MTG............................	EA	1
254	64	XDOZZ		820T555D1	27315	.SPACER FENDER BASE MTG...	EA	4
254	65	XDOZZ		820T555-02	27315	.SPACER FENDER BASE MTG...	EA	1
254	66	XDOZZ		818F187	27315	.BASE FENDER MTG..	EA	1

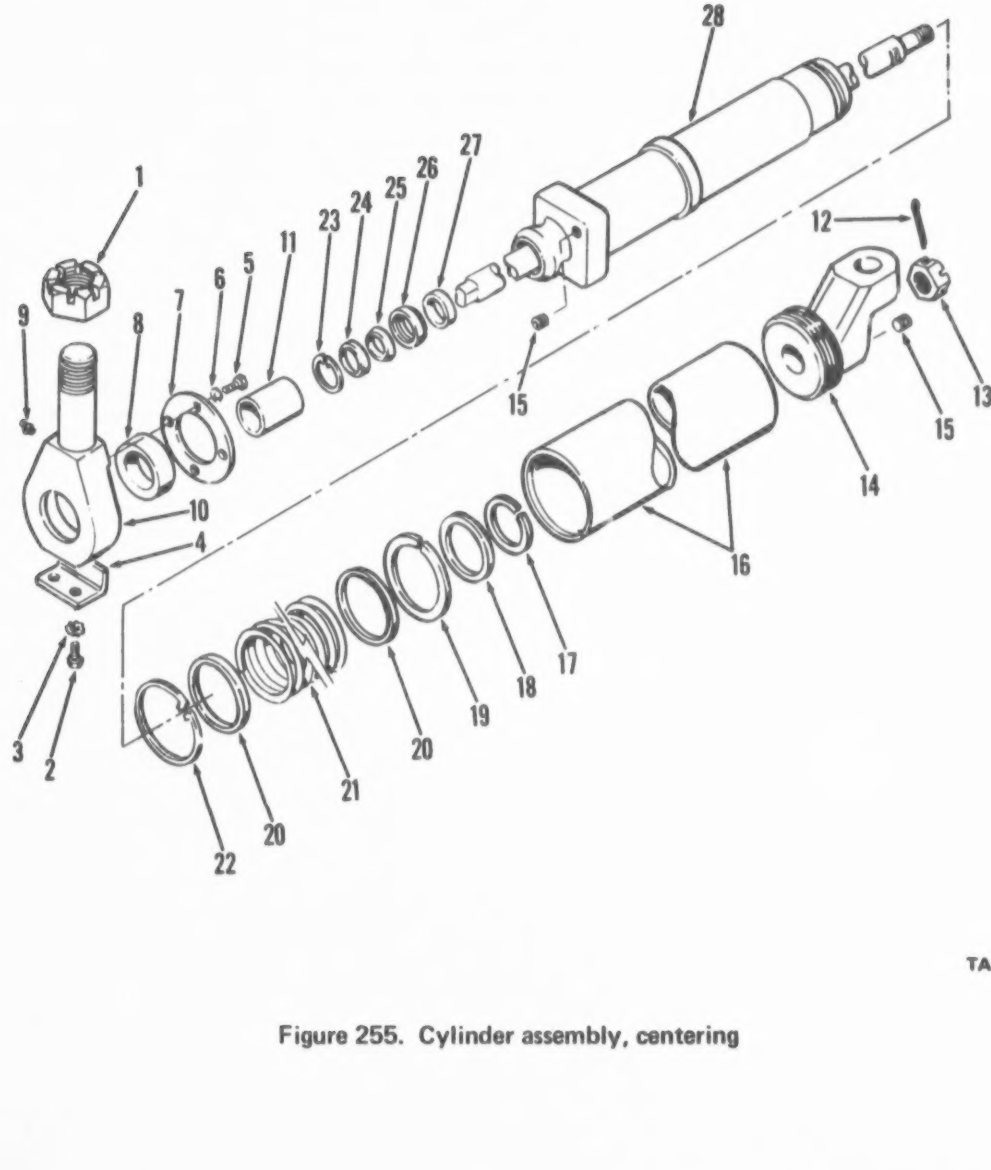

Figure 255. Cylinder assembly, centering

(1) ILLUSTRATION (a) FIG NO.	(b) ITEM NO.	(2) SMR CODE	(3) NATIONAL STOCK NUMBER	(4) PART NUMBER	(5) FSCM	(6) DESCRIPTION USABLE ON CODE	(7) U/M	(8) QTY INC IN UNIT
						FUNCTIONAL GROUP 69 CYLINDERS AND COMPONENT PARTS,STEERING FRONT AND REAR		
255	9	PAOZZ	4730-00-477-1741	134C63	02880	..FITTING,LUBRICATION ROD END................................	EA	1

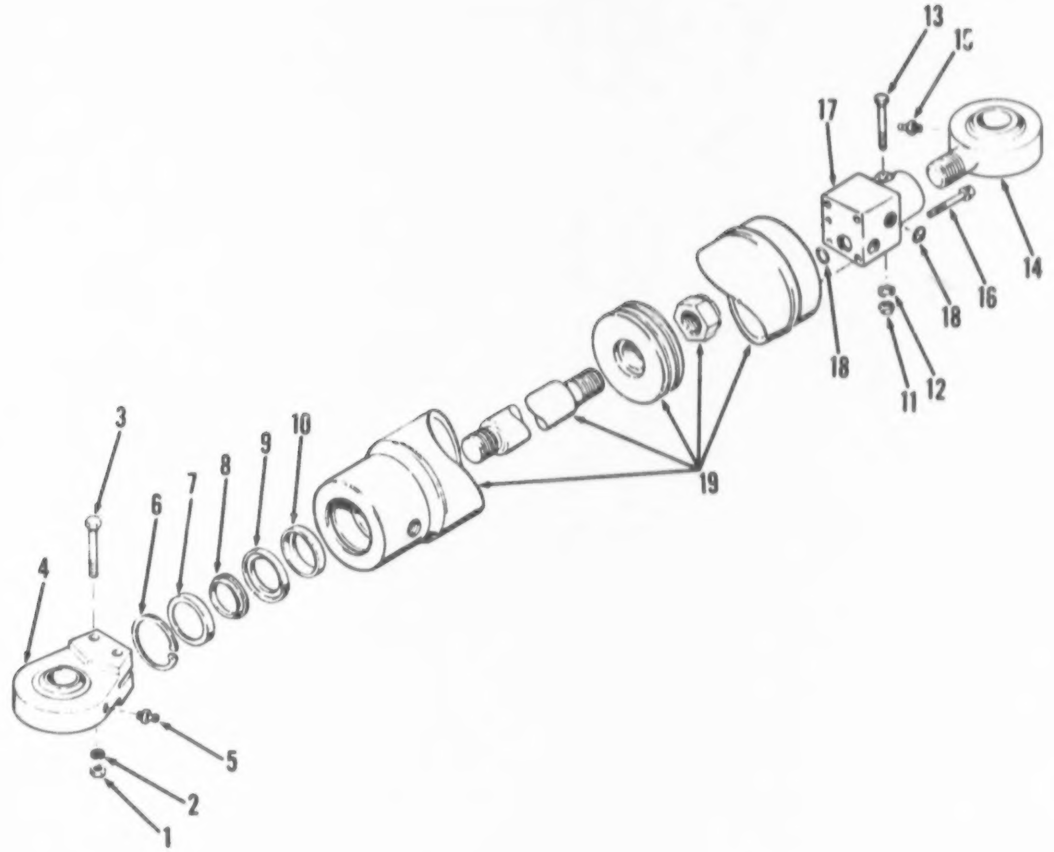

Figure 256. Cylinder assembly, steering

(1) ILLUSTRATION (a) FIG NO.	(b) ITEM NO.	(2) SMR CODE	(3) NATIONAL STOCK NUMBER	(4) PART NUMBER	(5) FSCM	(6) DESCRIPTION USABLE ON CODE	(7) U/M	(8) QTY INC IN UNIT
						FUNCTIONAL GROUP 69 CYLINDERS AND COMPONENT PARTS, STEERING FRONT AND REAR		
256	5	PAOZZ	4730-00-477-1741	134C63	03504	...FITTING, LUBRICATION ROD END	EA	1
256	15	PAOZZ	4730-00-477-1741	134C63	03504	...FITTING, LUBRICATION HEAD END	EA	1

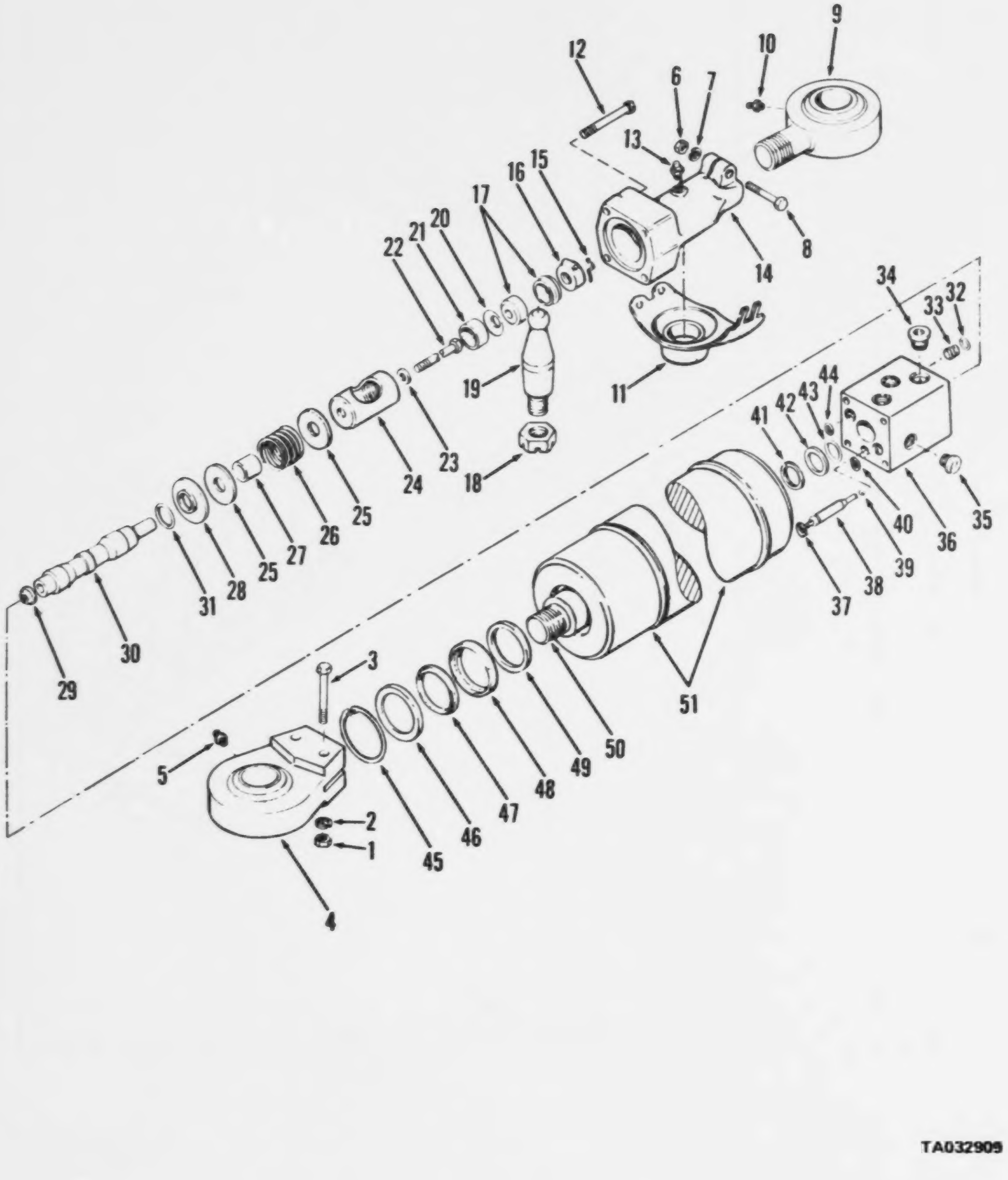

Figure 257. Cylinder assembly, steering

(1) ILLUSTRATION		(2)	(3)	(4)	(5)	(6)	(7)	(8)
(a) FIG NO.	(b) ITEM NO.	SMR CODE	NATIONAL STOCK NUMBER	PART NUMBER	FSCM	DESCRIPTION USABLE ON CODE	U/M	QTY INC IN UNIT
						FUNCTIONAL GROUP 69 CYLINDERS AND COMPONENT PARTS,STEERING FRONT AND REAR		
257	5	PAOZZ	4730-00-477-1741	134063	03504	...FITTING,LUBRICATION ROD END..............................	EA	1
257	10	PAOZZ	4730-00-477-1741	134063	03504	...FITTING,LUBRICATION HEAD END.............................	EA	1
257	13	PAOZZ	4730-00-851-7059	10H25	12603	..FITTING,LUBRICATION BALL STUD.............................	EA	1

best copy available

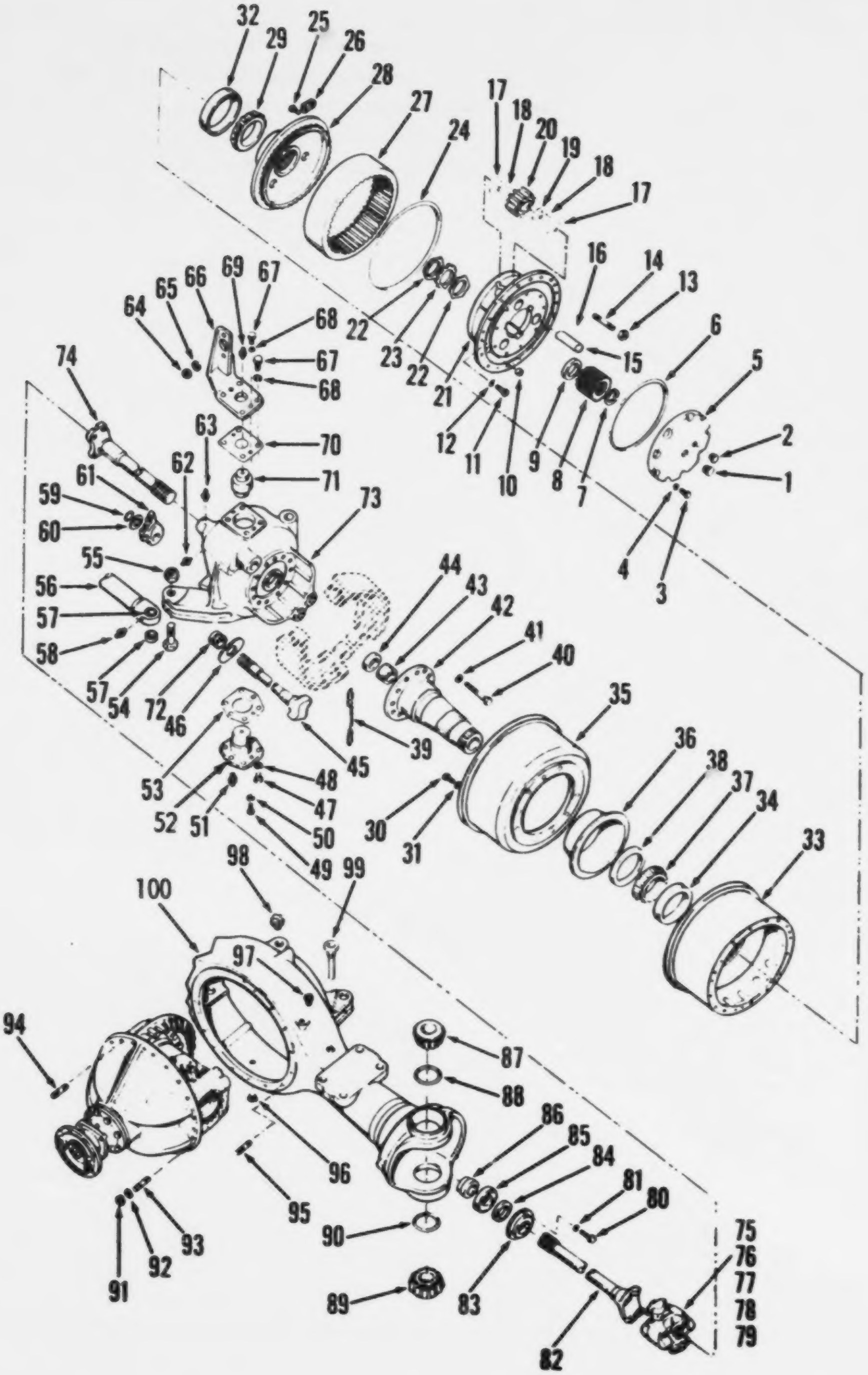

Figure 258. Axle assembly, front

(1) ILLUSTRATION (a) FIG NO.	(b) ITEM NO.	(2) SMR CODE	(3) NATIONAL STOCK NUMBER	(4) PART NUMBER	(5) FSCM	(6) DESCRIPTION USABLE ON CODE	(7) U/M	(8) QTY INC IN UNIT
						FUNCTIONAL GROUP TO AXLES,FRONT AND REAR,		
						CARRIER		
258	1	PAOZZ	4730-00-202-9170	1CF2	12603	.VALVE RELIEF PLANETARY COVER................................	EA	2
258	2	PAOZZ	4730-00-278-3380	MS490C5-10	96906	.PLUG,PIPE PLANET FILLER......................................	EA	2
258	10	XDOZZ		11947C	03504	.PLUG DRAIN PLANETARY..	EA	2
258	13	PAOZZ	5310-00-325-2456	113371	12603	.NUT SPECIAL WHEEL MTG...	EA	32
258	14	PAOZZ	5307-00-469-5403	118831	12603	.STUD,PLAIN WHEEL MTG..	EA	32
258	58	PAOZZ	4730-00-851-7059	10H25	12603	..FITTING,LUBRICATION TIE ROD................................	EA	2
258	60	XDOZZ	5310-00-834-8760	1C7010	03504	.WASHER,FLAT SLACK ADJUSTER MTG..............................	EA	2
258	61	XDOZZ	2530-00-226-1242	113364	12603	.ADJUSTER SLACK BRAKE LH.......................................	EA	1
258	61	XDOZZ	2530-00-226-1243	113363	12603	.ADJUSTER SLACK BRAKE RH.......................................	EA	1
258	62	PAOZZ	4730-01-025-7723	12H15	03504	.FITTING LUBRICATION BRAKE SPIDER............................	EA	2
258	63	PAOZZ	5310-00-891-7059	10H25	12603	..FITTING,LUBRICATION,CAMSHAFT LUB...........................	EA	2
258	64	XDOZZ	5310-01-023-5284	62D10	12603	.NUT,PLAIN,HEXAGON AIR CHAMBER MTG...........................	EA	4
258	65	XDOZZ	5310-00-791-8057	5E10	12603	.WASHER LOCK AIR CHAMBER MTG..................................	EA	4
258	66	XBOZZ	2530-00-632-3672	113359	12603	.BRACKET RH AIR CHAMBER MTG RH...............................	EA	1
258	67	XDOZZ		17C1236H	03504	.SCREW CAP AIR CHAMBER BRACKET AND...........................	EA	12
258	68	XBOZZ	5310-01-026-5686	26E12	12603	.WASHER,LOCK AIR CHAMBER BRACKET.............................	EA	12
258	69	PAOZZ	4730-00-851-7059	10H25	12603	.FITTING,LUBRICATION UPPER TRUNNION..........................	EA	2
258	79	PAOZZ	4730-00-019-1456	11H15	12603	..FITTING LUBRICATION UNIVERSAL JOINT........................	EA	1
258	96	XBOZZ	4730-00-163-4645	119469	12603	.PLUG,PIPE,MAGNETIC DIFFERENTIAL HOUSING.....................	EA	1
258	97	PBOZZ	5340-00-032-4157	16F06	03504	.PLUG,VENT DIFFERENTIAL HOUSING..............................	EA	1
258	98	PAOZZ	4730-00-278-3380	MS450C5-10	96906	.PLUG,PIPE DIFFERENTIAL HOUSING..............................	EA	1
258	99	XBOZZ		121214	03504	.BREATHER DIFFERENTIAL HOUSING................................	EA	1

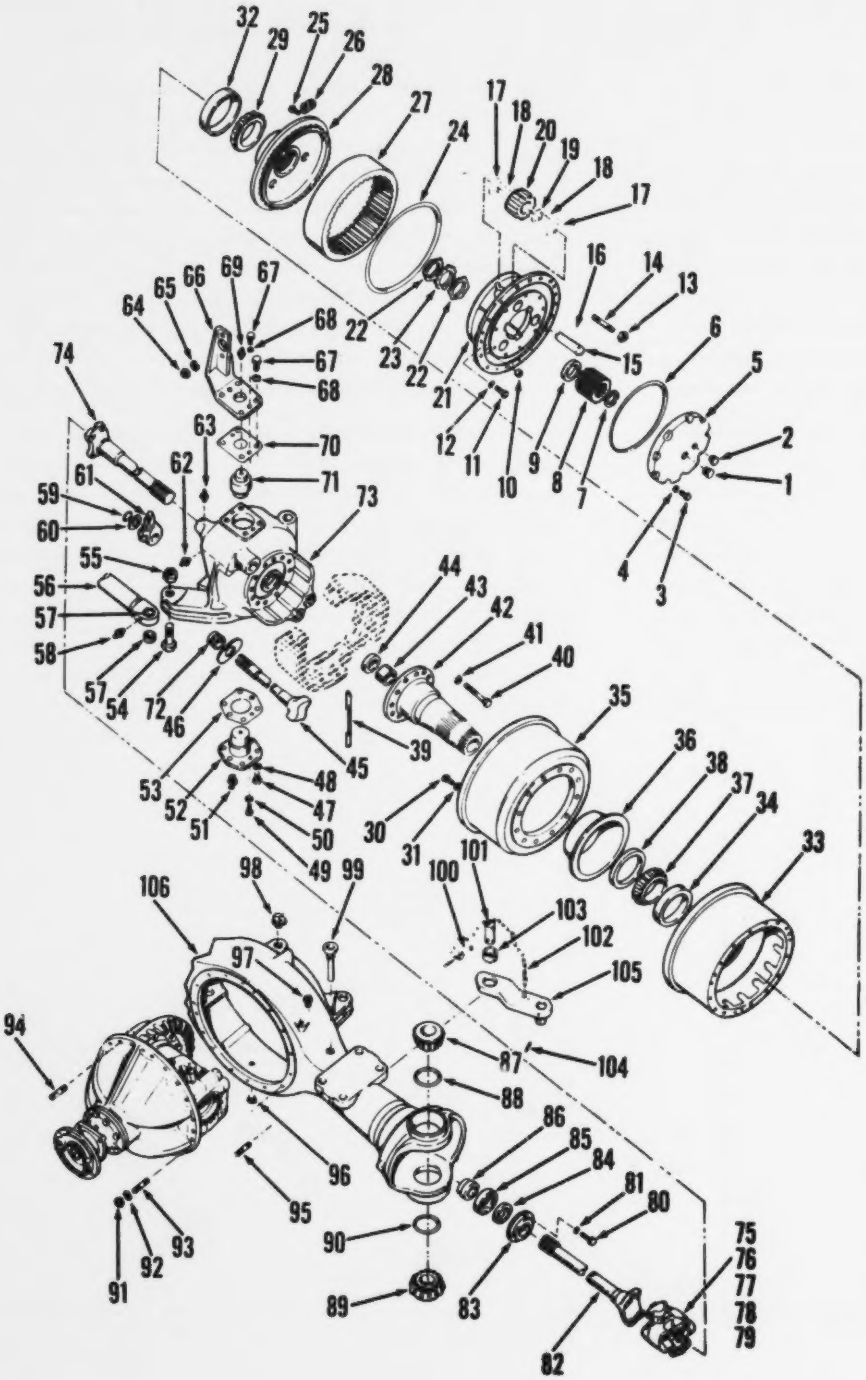

Figure 260. Axle assembly, rear

(1) ILLUSTRATION (a) FIG NO.	(b) ITEM NO.	(2) SMR CODE	(3) NATIONAL STOCK NUMBER	(4) PART NUMBER	(5) FSCM	(6) DESCRIPTION USABLE ON CODE	(7) U/M	(8) QTY INC IN UNIT
						FUNCTIONAL GROUP TO AXLES, FRONT AND REAR, CARRIER		
260	1	PAOZZ	2010-00-981-3229	10FC2	12603	.PLUG,STEERING PLANETARY COVER..................................	EA	2
260	2	PAOZZ	4730-00-278-3380	MS49005-10	96906	.PLUG,PIPE PLANET FILLER..................................	EA	2
260	10	XBOZZ		119470	03504	.PLUG DRAIN PLANETARY..................................	EA	2
260	13	PAOZZ	5310-00-325-2456	113371	12603	.NUT SPECIAL WHEEL MTG..................................	EA	32
260	14	PAOZZ	5307-00-469-5403	118831	12603	.STUD,PLAIN WHEEL MTG..................................	EA	32
260	58	PAOZZ	4730-00-891-7059	10H25	12603	..FITTING,LUBRICATION TIE ROD..................................	EA	2
260	59	XBOZZ	5365-00-072-6729	659764	12603	.RING,RETAINING SLACK ADJUSTER MTG..................................	EA	2
260	60	XBOZZ	5310-00-834-8760	107C10	03504	.WASHER,FLAT SLACK ADJUSTER MTG..................................	EA	2
260	61	PAOZZ	2530-00-226-1242	113364	12603	.ADJUSTER SLACK BRAKE LH..................................	EA	1
260	61	PAOZZ	2530-00-226-1243	113363	12603	.ADJUSTER SLACK BRAKE RH..................................	EA	1
260	64	XBOZZ	5310-01-027-5284	62D10	03504	.NUT HEXAGON AIR CHAMBER MTG..................................	EA	4
260	65	PAOZZ	5310-00-791-8057	5E10	12603	.WASHER LOCK AIR CHAMBER MTG..................................	EA	4
260	66	XBOZZ	2530-00-632-3672	113359	12603	.BRACKET RH AIR CHAMBER MTG RH..................................	EA	1
260	67	XBOZZ		17C1236H	12603	.SCREW CAP AIR CHAMBER BRACKET AND..................................	EA	12
260	68	XDOZZ	5310-01-026-5686	26F12	12603	.WASHER,LOCK AIR CHAMBER BRACKET AND..................................	EA	12
260	69	PAOZZ	4730-00-851-7055	10H25	12603	.FITTING,LUBRICATION UPPER TRUNNION..................................	EA	2
260	96	XBOZZ	4730-00-167-4645	119469	12603	.PLUG,PIPE,MAGNETIC DIFFERENTIAL HOUSING..................................	EA	1
260	97	XBOZZ	5340-00-032-4157	16FC4	03504	.PLUG,VENT DIFFERENTIAL HOUSING..................................	EA	1
260	98	XBOZZ	4730-00-278-3380	MS49005-10	96906	.PLUG,PIPE DIFFERENTIAL HOUSING..................................	EA	1
260	99	XBOZZ		121714	03504	.BREATHER DIFFERENTIAL HOUSING..................................	EA	1
260		XBOZZ		119457	03504	.ARM & PIN ASSY TOW LOCK ARM..................................	EA	1
260	100	XBOZZ		106C23	03504	..PIN ROLL TOW LOCK ARM..................................	EA	1
260	101	XBOZZ	5315-00-226-8358	117185	12603	..PIN LOCK TOW LOCK ARM..................................	EA	1
260	102	PAOZZ	4010-00-460-3137	117184	03504	..CHAIN PIN RING TOW LOCK ARM..................................	EA	2
260	103	XDOZZ		5J26	03504	..RING SNAP TOW LOCK ARM..................................	EA	1
260	104	XBOZZ	5315-00-195-1423	119542	03504	..PIN,GROOVED HEA TOW LOCK ARM..................................	EA	1
260	105	XBOZZ		119496	03504	..ARM LOCK TOW REAR AXLE..................................	EA	1

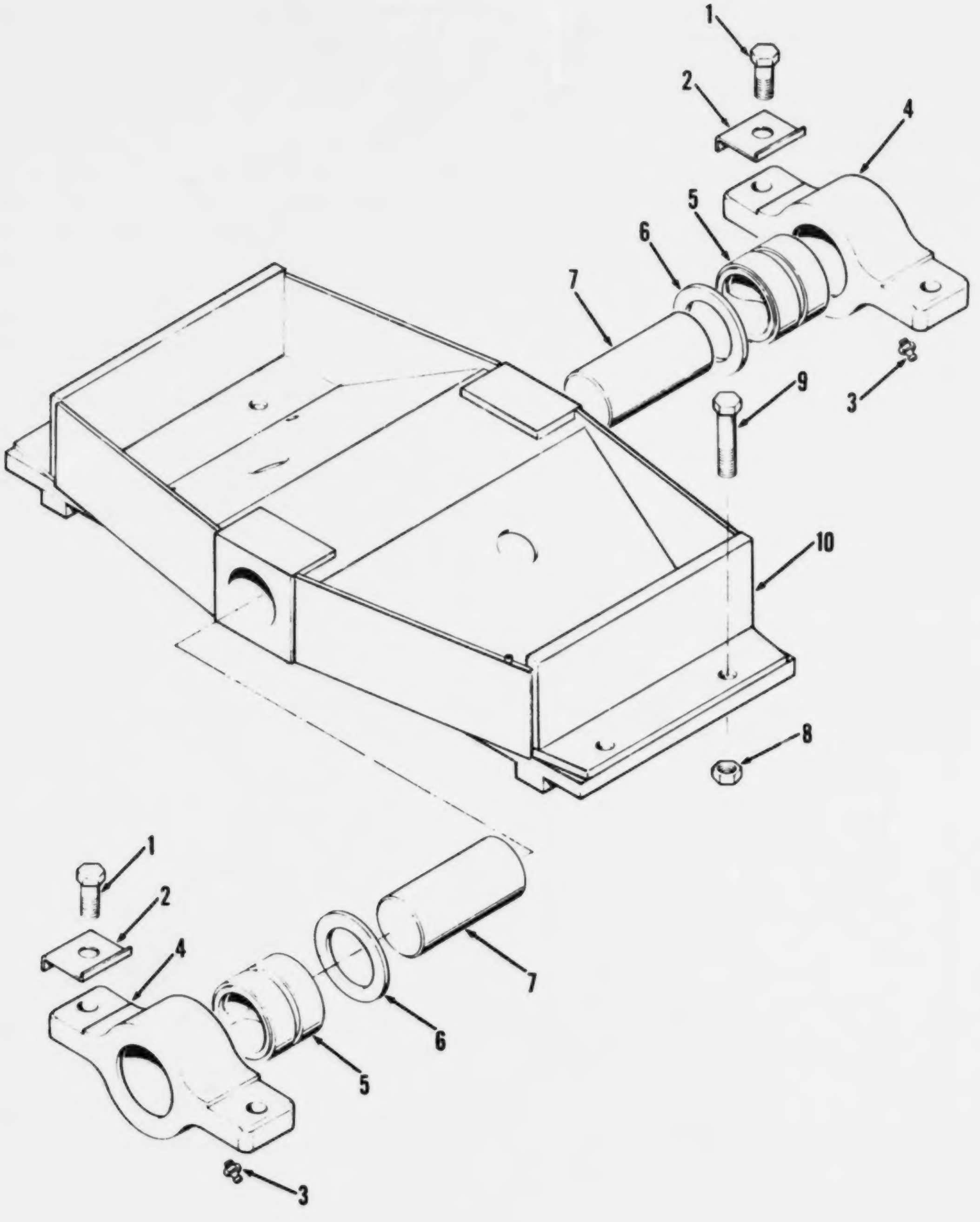

Figure 263. CRADLE, FRONT AXLE

(1) ILLUSTRATION (a) FIG NO.	(b) ITEM NO.	(2) SMR CODE	(3) NATIONAL STOCK NUMBER	(4) PART NUMBER	(5) FSCM	(6) DESCRIPTION USABLE ON CODE	(7) U/M	(8) QTY INC IN UNIT
						FUNCTIONAL GROUP 70 AXLES, FRONT AND REAR,		
						CARRIER		
263	3	PADZZ		4421-D1C	27315	.FITTING LUBRICATION PILLOW BLOCK..............................	EA	2

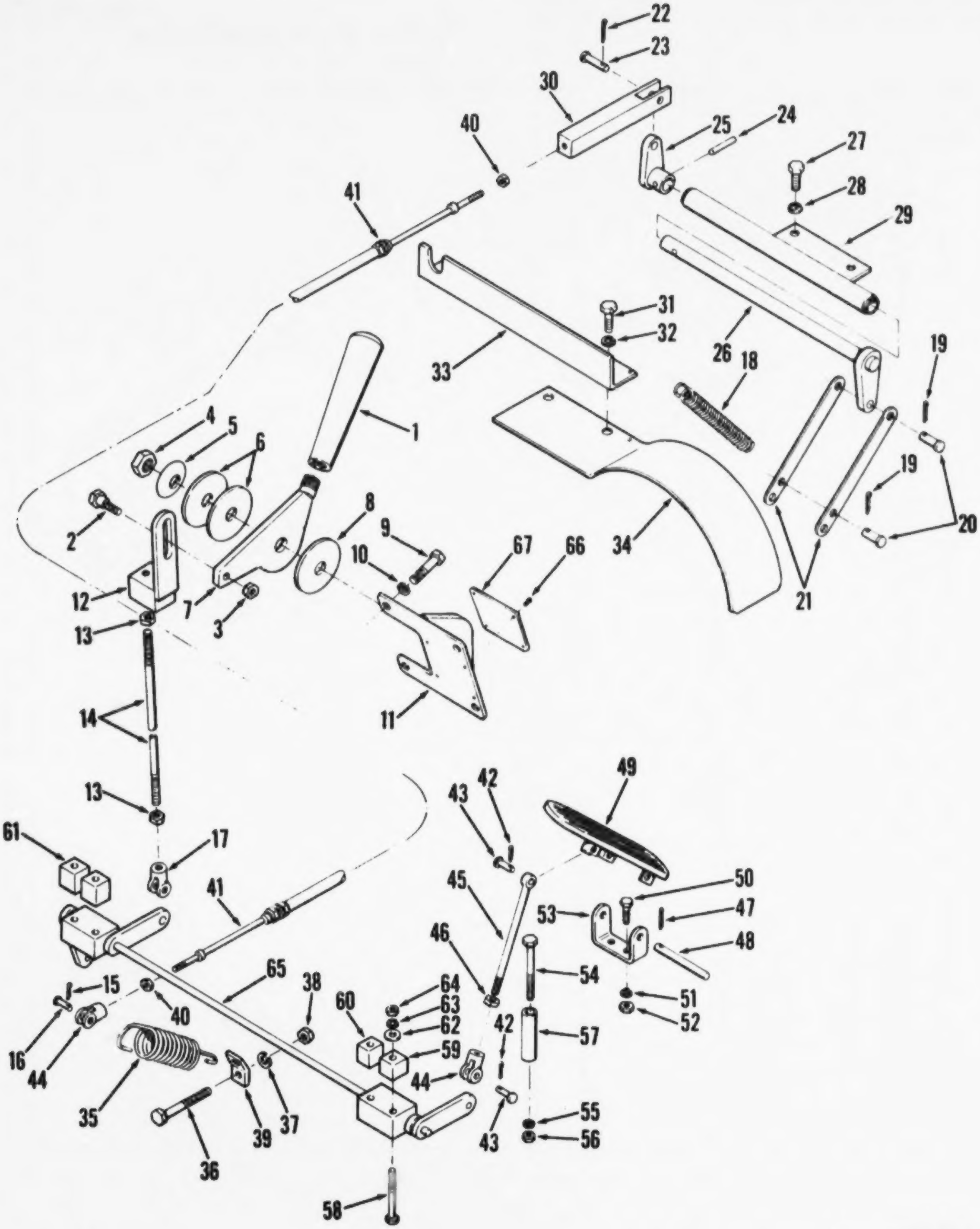

Figure 267. Throttle assembly, control

(1) ILLUSTRATION (a) FIG NO.	(b) ITEM NO.	(2) SMR CODE	(3) NATIONAL STOCK NUMBER	(4) PART NUMBER	(5) FSCM	(6) DESCRIPTION USABLE ON CODE	(7) U/M	(8) QTY INC IN UNIT
						FUNCTIONAL GROUP 70 AXLES,FRONT AND REAR, CARRIER		
267		AOOZZ		8100J0338	27315	.THROTTLE CNTL CARRIER FUEL SYSTEM............................	EA	1
267	1	XDOZZ		13206E5193	97403	..HANDLE THROTTLE FUEL CONTROL................................	EA	1
267	2	XBOZZ	5305-01-038-8455	2021584	27315	..SCREW SHOULDER 5/16-24X3/4 THRTL LINK.......................	EA	1
267	3	XDOZZ	5310-00-088-0553	MS21044N5	96906	..NUT,SELF LOCKING 5/16-24 THRTL LINK.........................	EA	1
267	4	XDOZZ	5310-00-811-3494	MS21044N08	96906	..NUT,SELF LOCKING 1/2-20 THRTL LEVER MTG.....................	EA	1
267	5	XBOZZ	5310-01-031-0785	180105027	27315	..WASHER,CONICAL THRTL LEVER MTG..............................	EA	1
267	6	XBOZZ	5310-01-038-4655	1822434	27315	..WASHER PLASTIC 9/16 THRTL LEVER MTG.........................	EA	2
267	7	XDOZZ		806P235	27315	..LEVER THROTTLE CARRIER FUEL CONTROL.........................	EA	1
267	8	PAOZZ	5310-01-046-2031	818T553	27315	..WASHER,FLAT .563IDX2.25 OD THRTL LEVER......................	EA	1
267	9	XDOZZ	5305-00-269-3213	MS90725-62	96906	..SCREW,CAP,HEXAGON 3/8-16X1-1/4 CONTROL......................	EA	4
267	10	XDOZZ	5310-00-637-9541	MS35338-46	96906	..WASHER,LOCK 3/8 CONTROL BRACKET MTG.........................	EA	4
267	11	XDOZZ		816P671	27315	..BRACKET CONTROL THROTTLE LEVER..............................	EA	1
267	12	XDOZZ		806T342	27315	..LINK CONTROL THROTTLE.......................................	EA	1
267	13	XBOZZ	5310-00-732-0559	MS51968-8	96906	..NUT PLAIN HEX ADJUSTING LINK................................	EA	2
267	14	XDOZZ	2910-00-120-4854	13208E6457	97403	..ROD THREADED LEVER TO BELLCRANK.............................	EA	1
267	15	XDOZZ	5315-00-239-8027	MS24665-238	96906	..PIN COTTER 3/32X1 CLEVIS PIN................................	EA	1
267	16	XBOZZ	5315-00-815-8840	MS35810-4	96906	..PIN STRAIGHT,HEADED 3/8X0.938 CLEVIS........................	EA	1
267	17	XDOZZ		609104	27315	..CLEVIS ROD END 3/8-24X2-1/2.................................	EA	1
267	18	XCOZZ		13208E6462	97403	..SPRING,HELICAL: THROTTLE CONTROL LINK.......................	EA	1
267	19	XDOZZ	5315-00-239-8027	MS24665-238	96906	..PIN,COTTER 3/32X1 CLEVIS PIN................................	EA	1
267	20	XBOZZ	5315-00-812-3425	MS20392-4C21	96906	..PIN,STRAIGHT,HEADED 5/16X21/32 ROD MTG......................	EA	1
267	21	XBOZZ	3040-01-027-9692	13219E0553	97403	..LEVER,REMOTE THROTTLE CONTROL...............................	EA	2
267	22	XDOZZ	5315-00-239-8027	MS24665-238	96906	..PIN,COTTER 3/32X1 CLEVIS PIN................................	EA	1
267	23	XBOZZ	5315-00-812-3425	MS20392-4C21	96906	..PIN,STRAIGHT,HEADED 5/16X21/32 ROD MTG......................	EA	1
267	24	XBOZZ	5315-01-029-6254	190140166	27315	..PIN SPRING 0.186X3/4 LEVER MTG..............................	EA	1
267	25	XDOZZ		806T33	27315	..LEVER THROTTLE FUEL CONTROL.................................	EA	1
267	26	XDOZZ		806T343	27315	..LEVER THROTTLE FUEL CONTROL.................................	EA	1
267	27	XDOZZ	5305-00-942-2196	MS18154-60	96906	..SCREW,CAP,HEXAGON 3/8-16X1 LEVER ROD MTG....................	EA	2
267	28	XDOZZ	5310-00-637-9541	MS35338-46	96906	..WASHER,LOCK 3/8 LEVER ROD MTG...............................	EA	2
267	29	XDOZZ		816P681	27315	..SUPPORT PIVOT...	EA	1
267	30	XDOZZ		806P236	27315	..CLEVIS CABLE FUEL CONTROL...................................	EA	1
267	31	XDOZZ	5305-00-942-2196	MS18154-60	96906	..SCREW,CAP,HEXAGON 3/8-16X1 BRACKET MTG......................	EA	2
267	32	XDOZZ	5310-00-637-9541	MS35338-46	96906	..WASHER,LOCK 3/8 BRACKET MTG.................................	EA	2
267	33	XDOZZ		816T1301	27315	..BRACKET CABLE FUEL CONTROL..................................	EA	1
267	34	XDOZZ		814P35	27315	..GUARD ALTNR ENGINE..	EA	1
267	35	XDOZZ		17Q13	27315	..SPRING,HELICAL,THROTTLE CONTROL.............................	EA	1
267	36	XDOZZ	5305-00-269-3219	MS90725-69	96906	..SCREW CAP HEXAGON 3/8-16X2-3/4 BRACKET......................	EA	1
267	37	XDOZZ	5310-00-637-9541	MS35338-46	96906	..WASHER,LOCK 3/8 BRACKET MTG.................................	EA	1
267	38	XDOZZ	5310-00-732-0558	MS51967-8	96906	..NUT,PLAIN,HEXAGON 3/8-16 BRACKET MTG........................	EA	1
267	39	XDOZZ		816T1298	27315	..BRACKET SPRING THROTTLE CONTROL.............................	EA	1

(1) ILLUSTRATION (a) FIG NO.	(b) ITEM NO.	(2) SMR CODE	(3) NATIONAL STOCK NUMBER	(4) PART NUMBER	(5) FSCM	(6) DESCRIPTION USABLE ON CODE	(7) U/M	(8) QTY INC IN UNIT
267	40	XDOZZ	5310-00-768-0319	MS51968-2	96906	..NUT,PLAIN,HEXAGON 1/4-28 CABLE MTG........................	EA	2
267	41	XDOZZ		13213E9360-3	97403	..CABLE CONTROL 142 IN LG THROTTLE CONTROL..................	EA	1
267	42	XDOZZ	5315-00-839-2325	109155	15434	..PIN,COTTER 1/16X1/2 CLEVIS PIN............................	EA	3
267	43	XDOZZ	5315-01-039-4464	19Z28302	27315	..PIN,STRAIGHT,HEADED 1/4X43/64 CLEVIS PIN..................	EA	3
267	44	XDOZZ		609102	27315	..CLEVIS 1/4-28X2 CABLE END.................................	EA	2
267	45	XBOZZ	5306-00-440-7840	13215E7644	97403	..ROD ACLRTR PDL THROTTLE CONTROL...........................	EA	1
267	46	XDOZZ	5310-00-768-0319	MS51968-2	96906	..NUT,PLAIN,HEXAGON 1/4-28 ROD END...........................	EA	1
267	47	XDOZZ	5315-00-239-8027	MS24665-238	96906	..PIN,COTTER 3/32X1 CLEVIS PIN...............................	EA	1
267	48	XDOZZ		819T187	27315	..PIN CLEVIS PEDAL MTG......................................	EA	1
267	49	XBOZZ	2540-00-250-4390	13208E6453	97403	..PEDAL,ACCELERATOR THROTTLE CONTROL.........................	EA	1
267	50	XDOZZ	5305-00-225-3839	MS90725-8	96906	..SCREW CAP HEXAGON 1/4-20X1 BRACKET MTG....................	EA	1
267	51	XDOZZ	5310-00-582-5965	MS35338-44	96906	..WASHER,LOCK 1/4 BRACKET MTG...............................	EA	1
267	52	XDOZZ	5310-00-761-6882	MS51967-2	96906	..NUT,PLAIN,HEXAGON 1/4-20 BRACKET MTG......................	EA	1
267	53	XDOZZ		816T1299	27315	..BRACKET PEDAL THROTTLE CONTROL............................	EA	1
267	54	XDOZZ	5305-00-071-2234	MS90725-17	96906	..SCREW,CAP,HEXAGON 1/4-20X2-3/4 PEDAL......................	EA	1
267	55	XDOZZ	5310-00-582-5965	MS35338-44	96906	..WASHER,LOCK 1/4 PEDAL STOP MTG............................	EA	1
267	56	XDOZZ	5310-00-761-6882	MS51967-2	96906	..NUT,PLAIN,HEXAGON 1/4 PEDAL STOP MTG......................	EA	1
267	57	XDOZZ		820T547	27315	..STOP PEDAL ACCELERATOR....................................	EA	1
267	58	XDOZZ	5305-00-071-2236	MS90725-15	96906	..SCREW,CAP,HEXAGON 1/4-20X2-1/2 BELLCRANKMTG...............	EA	4
267	59	XDOZZ		818T61103	27315	..SPACER BLCRK THROTTLE CONTROL.............................	EA	1
267	60	XDOZZ		818T61102	27315	..SPACER BLCRK THROTTLE CONTROL.............................	EA	1
267	61	XDOZZ		818T61103	27315	..SPACER BLCRK THROTTLE CONTROL.............................	EA	2
267	62	XDOZZ	5310-00-809-4058	MS27183-10	96906	..WASHER,FLAT 9/32 BELLCRANK MTG............................	EA	4
267	63	XDOZZ	5310-00-582-5965	MS35338-44	96906	..WASHER,LOCK 1/4 BELLCRANK MTG.............................	EA	4
267	64	XDOZZ	5310-00-761-6882	MS51967-2	96906	..NUT,PLAIN,HEXAGON 1/4 BELLCRANK MTG.......................	EA	4
267	65	XBOZZ	3040-00-240-5381	13213E9356	97403	..LEVER,REMOTE THROTTLE CONTROL.............................	EA	1
267	66	XDOZZ	5305-00-984-4581	MS35206-224	96906	..SCREW,MACHINE NO.6X1/4 DATA PLATE MTG.....................	EA	4
267	67	XBOZZ	9905-01-027-4610	720438D3	27315	..PLATE,INSTRUCTION THROTTLE CONTROL........................	EA	1

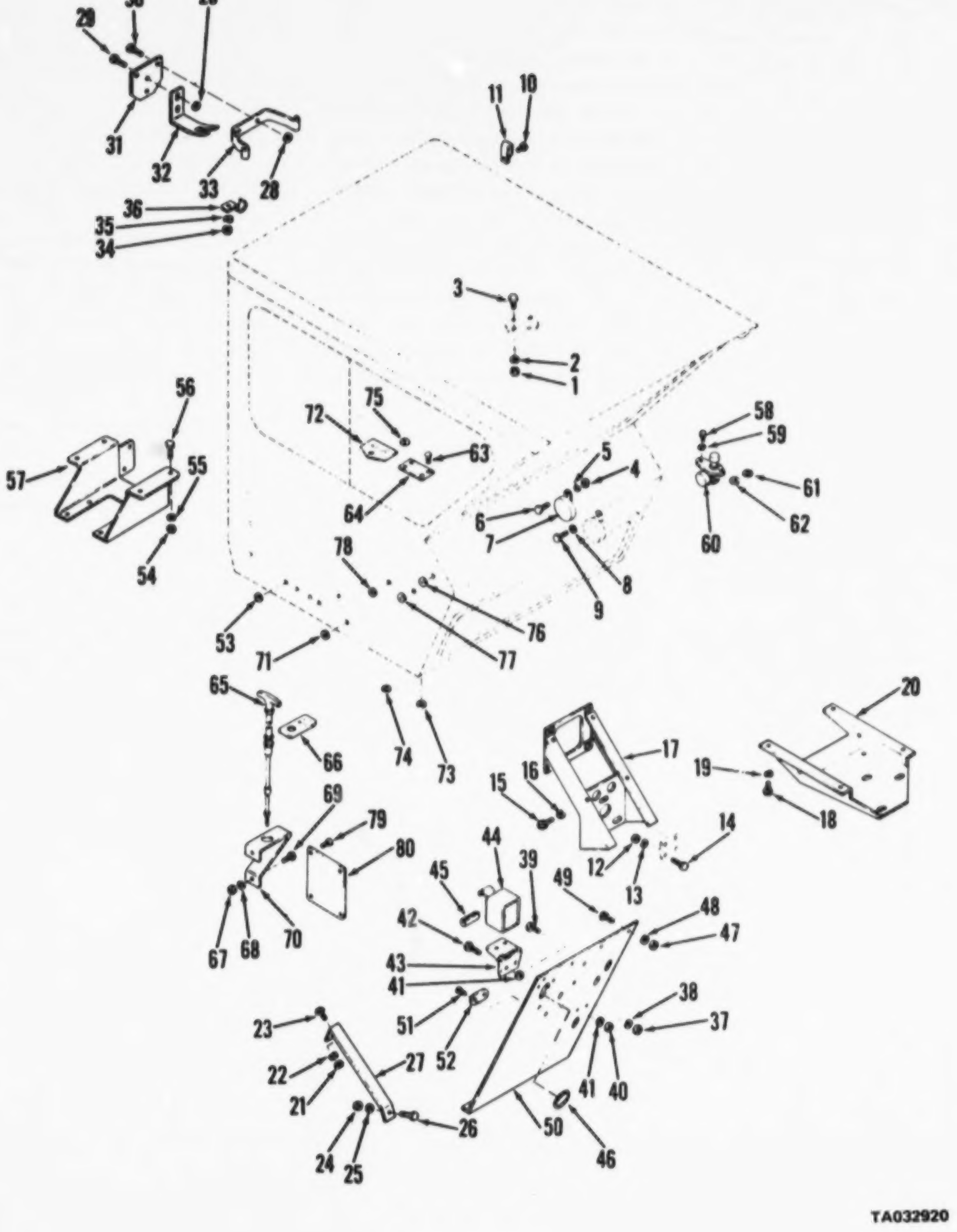

Figure 268. Operator's cab assembly (Sheet 1 of 2)

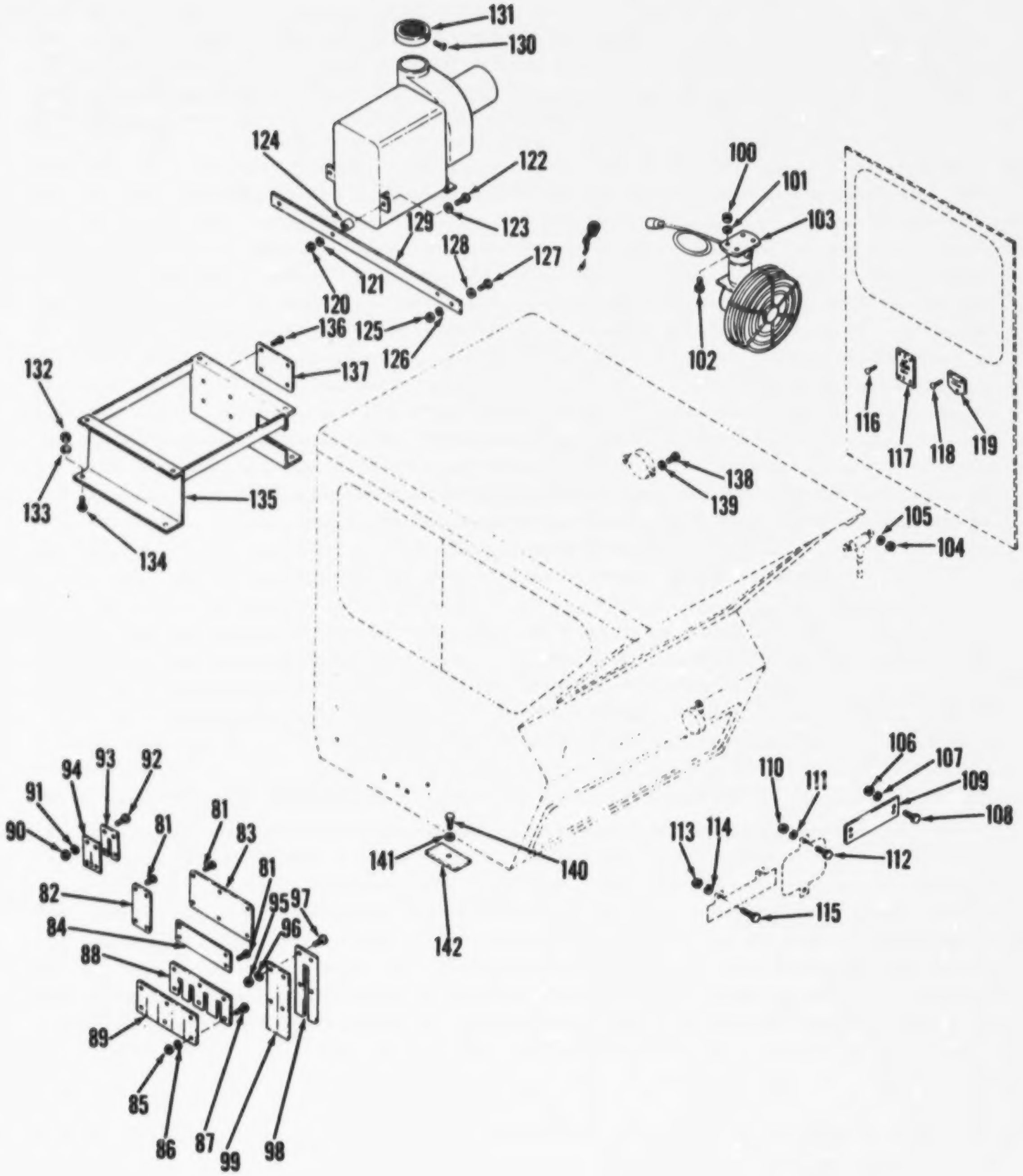

TA032821

Figure 268. Operator's cab assembly (Sheet 2 of 2)

(1) ILLUSTRATION (a) FIG NO.	(b) ITEM NO.	(2) SMR CODE	(3) NATIONAL STOCK NUMBER	(4) PART NUMBER	(5) FSCM	(6) DESCRIPTION USABLE ON CODE	(7) U/M	(8) QTY INC IN UNIT
						FUNCTICNAL GROUP 72 CAB ASSEMBLY AND RELATED PARTS		
268	1	XOOZZ	5310-00-880-7744	MS51967-5	96906	.NUT,PLAIN,HEXAGON TREADLE VALVE MTG 5-16.18.................	EA	3
268	2	XOOZZ	5310-00-407-9566	MS35338-45	96906	.WASHER,LOCK TREDLLE VALVE MTG 5-16 INCH.....................	EA	3
268	3	XOOZZ	5306-00-225-8497	MS90725-32	96906	.BOLT MACHINE TREADLE VALVE MTG 5-16-18 X.3-4................	EA	3
268	4	XOOZZ	5310-00-905-0762	MS51967-3	96906	.NUT,PLAIN,HEXAGON BUZZER MTG 1-4-20.........................	EA	3
268	5	XOOZZ	5310-00-582-5965	MS35338-44	96906	.WASHER,LOCK BUZZER MTG 1-4 INCH.............................	EA	3
268	6	XOOZZ	5305-00-068-0501	MS90725-5	96906	.SCREW,CAP,HEXAGON BUZZER MTG 1-4-20 X 5-8...................	EA	3
268	7	PAOZZ	6350-00-772-7664	88164M2	80252	.BUZZER BRAKE INDICATOR......................................	EA	1
268	8	XOOZZ	5310-00-582-5965	MS35338-44	96906	.WASHER,LOCK STOP LIGHT SWITCH MTG...........................	EA	3
268	9	XOOZZ	5305-00-068-0501	MS90725-5	96906	.SCREW,CAP,HEXAGON STOP LIGHT SWITCH MTG.....................	EA	3
268	10	XOOZZ	5305-00-432-4202	MS51861-46	96906	.SCREW,TAPPING CLAMP MTG 10-16 X 5-8.........................	EA	2
268	11	XOOZZ	5340-01-019-2986	MS21334-7	96906	.CLAMP,LOOP WIPER MOTOR HOSE MTG.............................	EA	2
268	12	XOOZZ	5310-00-905-0762	MS51967-3	96906	.NUT,PLAIN,HEXAGON PRESSURE SWITCH MTG 1-4-20................	EA	4
268	13	XOOZZ	5310-00-582-5965	MS35338-44	96906	.WASHER,LOCK PRESSURE SWITCH MTE 1-4 INCH....................	EA	4
268	14	XOOZZ	5305-00-068-0501	MS90725-5	96906	.SCREW,CAP,HEXAGON PRESSURE SWITCH MTG 1-4-20 X 5-8..........	EA	4
268	15	XOOZZ	5305-00-269-3209	MS90725-58	96906	.SCREW,CAP,HEXAGON BRACKET MTG 3-8-16 X 3-4..................	EA	4
268	16	XOOZZ	5310-00-637-9541	MS35338-46	96906	.WASHER,LOCK BRACKET MTG 3-8 INCH............................	EA	4
268	17	XOOZZ		816N269	27315	.BRACKET MOUNTING ANGLE DRIVE................................	EA	1
268	18	XOOZZ	5305-00-269-3209	MS90725-58	96906	.SCREW,CAP,HEXAGON BRACKET MTG 3-8-16 X 3-4..................	EA	4
268	19	XOOZZ	5310-00-637-9541	MS35338-46	96906	.WASHER,LOCK BRACKET MTG 3-8 INCH............................	EA	4
268	20	XOOZZ		816N272	27315	.BRACKET MOUNTING INSTRUMENT PANEL...........................	EA	1
268	21	XOOZZ	5310-00-761-6882	MS51967-2	96906	.NUT,PLAIN,HEXAGON BRACKET MTG 1-4-20........................	EA	1
268	22	XOOZZ	5310-00-582-5965	MS35338-44	96906	.WASHER,LOCK BRACKET MTG 1-4 INCH............................	EA	1
268	23	XOOZZ	5305-00-068-0501	MS90725-5	96906	.SCREW,CAP,HEXAGON BRACKET MTG 1-4-20 X 5-8..................	EA	1
268	24	XOOZZ	5310-00-761-6882	MS51967-2	96906	.NUT,PLAIN,HEXAGON BRACKET MTG 1-4-20........................	EA	1
268	25	XOOZZ	5310-00-582-5965	MS35338-44	96906	.WASHER,LOCK BRACKET MTG 1-4 INCH............................	EA	1
268	26	XOOZZ	5305-00-071-2238	MS90725-13	96906	.SCREW CAP HEXAGON BRACKET MTG 1-4-20 X 1-3-4................	EA	1
268	27	XOOZZ	5310-00-761-6882	MS51967-2	96906	NUT,PLAIN,HEXAGON TROUBLE LIGHT MTG 1-4-20...................	EA	4
268	28	XOOZZ	5310-00-582-5965	MS35338-44	96906	.WASHER,LOCK TROUBLE LIGHT MTG 1-4 INCH......................	EA	4
268	29	XBOZZ		MS90725-3	96906	.SCREW,CAP,HEX HD: 1/4-20 X 1/2,TROUBLE LIGHT MTG............	EA	2
268	30	XOOZZ	5305-00-225-3839	MS90725-8	96906	.SCREW CAP HEXAGON TROUBLE LIGHT MTG 1-4-.0 X 1..............	EA	2
268	31	XOOZZ		816P677	27315	.BRACKET TROUBLE LIGHT MTG...................................	EA	1
268	32	XOOZZ		320444	27315	.CLAMP SPRING TROUBLE LIGHT MTG..............................	EA	1
268	33	XOOZZ	3810-01-020-3885	816T1293	27315	.PLATE,MOUNTING TROUBLE LIGHT MTG............................	EA	1
268	34	XOOZZ	5310-00-880-7744	MS51967-5	96906	.NUT,PLAIN,HEXAGON STRAP MTG 5-16-18.........................	EA	1
268	35	XOOZZ	5310-00-407-9566	MS35338-45	96906	.WASHER,FLAT STRAP MTG 5-16 INCH.............................	EA	1
268	36	XOOZZ		820T546	27315	.STRAP TROUBLE LIGHT CORD MTG................................	EA	1
268	37	XOOZZ	5310-00-934-9751	MS35650-3C2	96906	.NUT,PLAIN,HEXAGON VALVE MTG NO 10-32........................	EA	2

(1) ILLUSTRATION (a) FIG NO.	(b) ITEM NO.	(2) SMR CODE	(3) NATIONAL STOCK NUMBER	(4) PART NUMBER	(5) FSCM	(6) DESCRIPTION USABLE ON CODE	(7) U/M	(8) QTY INC IN UNIT
268	38	XDOZZ	5310-00-080-9786	MS45904-60	96906	.WASHER,LOCK VALVE MTG	EA	2
268	39	XDOZZ	5305-00-989-7434	MS35207-263	96906	.SCREW MACHINE VALVE MTG NO 10-32 X 1-2	EA	2
268	40	XDOZZ	5310-00-934-9739	MS35649-242	96906	.NUT,PLAIN,HEXAGON PARK ABORT COVER MTG NO 4-40	EA	4
268	41	XDOZZ	5310-00-784-1195	MS45904-51	96906	.WASHER,LOCK PARK ABORT COVER MTG	EA	4
268	42	XDOZZ	5305-00-983-6730	MS35206-218	96906	.SCREW,MACHINE PARK ABORT COVER MTG NO 4-.0 X 5-8	EA	4
268	43	XDOZZ		B1088	71126	.HINGE,SPRING,COVER MOUNTING	EA	1
268	44	XDOZZ		814P32	27315	.COVER PARK ABORT PARK ABORT	EA	1
268	45	PCOZZ	9390-01-055-5202	X1429	70485	.RUBBER STOCK PARK ABORT COVER	EA	1
268	46	PCOZZ	5325-00-921-0960	MS35490-81	96906	.GROMMET,RUBBER PANEL	EA	1
268	47	XDOZZ	5310-00-761-6882	MS51967-2	96906	.NUT,PLAIN,HEXAGON PANEL MTG 1-4-20	EA	8
268	48	XDOZZ	5310-00-067-6357	MS45904-69	96906	.WASHER,LOCK PANEL MTG	EA	8
268	49	XDOZZ	5305-00-068-0501	MS90725-5	96906	.SCREW,CAP,HEXAGON PANEL MTG 1-4-20 X 5-8	EA	8
268	50	XDOZZ		827N604	27315	.PANEL CARRIER CAB	EA	1
268	51	XDOZZ	5305-00-253-5614	MS21318-20	96906	.SCREW,DRIVE PLATE MTG	EA	2
268	52	XBOZZ		13217E3153	97403	.PLATE AXLE LOCK	EA	1
268	53	PCOZZ		MS35490-38	96906	.GROMMET,RUBBER CAB	EA	4
268	54	XDOZZ	5310-00-732-0558	MS51967-8	96906	.NUT,PLAIN,HEXAGON BRACKET MTG 3-8-16	EA	8
268	55	XDOZZ	5310-00-543-2410	MS35338-40	96906	.WASHER,LOCK BRACKET MTG 3-8 INCH	EA	8
268	56	XDOZZ	5305-00-269-3209	MS90725-58	96906	.SCREW,CAP,HEXAGON BRACKET MTG 3-8-16	EA	8
268	57	XDOZZ		816N262	27315	.BRACKET MOUNTING SHIFT CONTROL	EA	1
268	58	XDOZZ	5305-00-068-0501	MS90725-5	96906	.SCREW,CAP,HEXAGON BEAM SELECTING SWITCH..TG 1-4-20 X 3-4	EA	3
268	59	XDOZZ	5310-00-067-6357	MS45904-69	96906	.WASHER LOCK BEAM SELECTING SWITCH MTG 1-4 INCH	EA	3
268	60	XDOZZ	2590-00-891-2355	MS53000-1	96906	.SWITCH,BEAM CAB	EA	1
268	61	PCOZZ	5325-00-490-4755	MS35490-35	96906	.GROMMET,RUBBER CAB WIRING	EA	1
268	62	PCOZZ	5325-00-921-0960	MS35490-81	96906	.GROMMET,RUBBER CAB WIRING	EO	1
269	63	XDOZZ	5305-00-253-5614	MS21318-20	96906	.SCREW DRIVE INFORMATION PLATE MTG	EA	4
268	64	XBOZZ	9905-00-239-4856	13215E4518	97403	.PLATE FRONT AXLE DISENGAGE	EA	1
268	65	PAOZZ	2590-00-248-3292	581184	02280	.CONTROL ASSEMBLY,PU UTILITY BLADE	EA	1
268	66	XBOZZ		3221449	27315	.PLATE,INSTRUCTION CONTROL CABLE TURN TO..NLOCK	EA	1
268	67	XDOZZ	5310-00-761-6882	MS51967-2	96906	.NUT,PLAIN,HEXAGON BRACKET MTG 1-4-20	EA	4
269	68	XDOZZ	5310-00-067-6357	MS45904-69	96906	.WASHER,LOCK BRACKET MTG 1-4 INCH	EA	4
268	69	XDOZZ	5305-00-071-2238	MS90725-13	96906	.SCREW,CAP,HEXAGON BRACKET MTG 1-4-20	EA	4
268	70	XDOZZ		816P678	27315	.BRACKET CONTROL CABLE MTG	EA	1
268	71	PCOZZ	5325-00-276-6343	MS35489-23	96906	.GROMMET RUBBER CONTROL CABLE	EA	1
268	72	XBOZZ	9905-00-239-4955	13205E4541	97403	.PLATE,INSTRUCTION ETHER PRIME	EA	1
268	73	PCOZZ	5325-00-816-4242	MS35490-41	96906	.GROMMET RUBBER HEATER WIRING	EA	2
268	74	PCOZZ	5325-00-270-8889	MS35489-81	96906	.GROMMET,RUBBER CAB WIRING	EA	2
268	75	PCOZZ	5325-00-490-4755	MS35490-35	96906	.GROMMET,RUBBER CAB WIRING	EA	2
268	76	PCOZZ		MS35490-22	96906	.GROMMET RUBBER CAB WIRING	EA	1

(1) ILLUSTRATION (a) FIG NO.	(b) ITEM NO.	(2) SMR CODE	(3) NATIONAL STOCK NUMBER	(4) PART NUMBER	(5) FSCM	(6) DESCRIPTION USABLE ON CODE	(7) U/M	(8) QTY INC IN UNIT
268	77	PCOZZ	5325-00-060-0976	MS35490-7	96906	.GROMMET RUBBER CAB WIRING	EA	2
268	78	PCOZZ	5325-00-263-6651	MS35489-12	96906	.GROMMET,RUBBER CAB WIRING	EA	1
268	79	XDOZZ	5305-00-253-5614	MS21318-20	96906	.SCREW DRIVE PLATE MTG NO 4-7 X 3-16	EA	4
268	80	XBOZZ		13215E3578	97403	.CAUTION PLATE BRAKES	EA	1
268	81	XDOZZ	5305-00-253-5614	MS21318-20	96906	.SCREW DRIVE PLATE MTG	EA	14
268	82	XBOZZ		32Z1447	27315	.PLATE INSTR SELECTOR CONTROL	EA	1
268	83	XBOZZ		32Q443	27315	.PLATE CAUTION BRAKES	EA	1
268	84	XBOZZ	9905-01-028-4317	32Q437	27315	.PLATE,INSTRUTION OUTRIGGER CONTROL	EA	1
268	85	XDOZZ	5310-00-934-9758	MS35649-202	96906	.NUT,PLAIN,HEXAGON COVER PLATE MTG 10-24	EA	6
268	86	XDOZZ	5310-00-045-3296	MS35338-43	96906	.WASHER,LOCK COVER PLATE MTG NO 10	EA	6
268	87	XBOZZ		MS35206-263	96906	.SCREW,MACHINE,10-24 X 1/2,COVER PLATE	EA	6
268	88	XBOZZ		814P17	27315	.PLATE COVER CARRIER CAB	EA	1
268	89	PCOZZ	5330-01-028-3637	20Q62	27315	.SEAL,RUBBER STRIP COVER PLATE	EA	1
268	90	XDOZZ	5310-00-934-9758	MS35649-202	96906	.NUT,PLAIN HEXAGON COVER PLATE MTG 10-24	EA	4
268	91	XDOZZ	5310-00-045-3296	MS35338-43	96906	.WASHER,LOCK COVER PLATE MTG NO 10	EA	4
268	92	XBOZZ		MS35206-263	96906	.SCREW,MACHINE: COVER PLATE MOUNTING	EA	4
268	93	XBOZZ		814T23	27315	.PLATE COVER CARRIER CAB	EA	1
268	94	PCOZZ	5330-01-028-5744	20Z1599	27315	.SEAL,RUBBER,STRIP COVER PLATE	EA	1
268	95	XDOZZ	5310-00-934-9758	MS35649-202	96906	.NUT,PLAIN,HEXAGON PLATE MTG 10-24	EA	4
268	96	XDOZZ	5310-00-045-3296	MS35338-43	96906	.WASHER,LOCK PLATE MTG NO 10	EA	4
268	97	XBOZZ		MS35206-263	96906	.SCREW,MACHINE: PLATE MOUNTING	EA	4
268	98	XBOZZ		818P186	27315	.PLATE CARRIER CAB	EA	1
268	99	PCOZZ	5330-01-028-4854	20Q69	27315	.SEAL,RUBBER STRIP COVER PLATE	EA	1
268	100	XDOZZ	5310-00-934-9757	MS35649-282	96906	.NUT,PLAIN,HEXAGON DEFROSTER FAN MTG 8-32	EA	4
268	101	XDOZZ	5310-00-045-3299	MS35338-42	96906	.WASHER,LOCK DEFROSTER FAN MTG	EA	4
268	102	XDOZZ	5305-00-984-6195	MS35206-247	96906	.SCREW,MACHINE DEFROSTER FAN MTG	EA	4
268	103	PAOZZ	2540-00-771-6665	13206E3303	97403	.DEFROSTER CARRIER CAB	EA	1
268	104	XBOZZ		MS35206-263	96906	.SCREW,MACHINE,MOUNTING,NO.10-24 X 1/2	EA	4
268	105	XDOZZ	5310-00-045-3296	MS35338-43	96906	.WASHER,LOCK LOW PRESSURE INDICATOR MTG NO 10	EA	2
268	106	XDOZZ	5310-00-934-9758	MS35649-202	96906	.NUT,PLAIN,HEXAGON INSULATION STRIP MTG	EA	2
268	107	XDOZZ	5310-00-045-3296	MS35338-43	96906	.WASHER,LOCK INSULATION STRIP MTG NO 10	EA	2
268	108	XDOZZ	5305-00-984-6212	MS35206-265	96906	.SCREW,MACHINE INSULATION STRIP MTG 10-24,X 3-4	EA	2
268	109	PCOZZ	6680-01-040-8807	20Q63	27315	.SEAL,RUBBER STRIP TERMINAL BOARD	EA	1
268	110	XDOZZ	5310-00-761-6882	MS51967-2	96906	.NUT,PLAIN,HEXAGON COVER MTG 1-4-20	EA	2
268	111	XDOZZ	5310-00-067-6357	MS45904-69	96906	.WASHER,LOCK COVER MTG 1-4 INCH	EA	2
268	112	XDOZZ	5305-00-068-0501	MS90725-5	96906	.SCREW,CAP,HEXAGON COVER MTG 1-4-20 X 5-8	EA	2
268	113	XDOZZ	5310-00-732-0558	MS51967-8	96906	.NUT,PLAIN,HEXAGON AIR MANIFOLD COVER MTG.3-8-16	EA	2
268	114	XDOZZ	5310-00-637-9541	MS35338-46	96906	.WASHER,LOCK AIR MANIFOLD COVER MTG 3-8	EA	2
268	115	XDOZZ	5305-00-269-3209	MS90725-58	96906	.SCREW,CAP,HEXAGON AIR MANIFOLD COVER MTG.3-8-16 X 3-4	EA	2

(1) ILLUSTRATION (a) FIG NO.	(b) ITEM NO.	(2) SMR CODE	(3) NATIONAL STOCK NUMBER	(4) PART NUMBER	(5) FSCM	(6) DESCRIPTION USABLE ON CODE	(7) U/M	(8) QTY INC IN UNIT
268	116	XDOZZ	5305-00-253-5614	MS21318-20	96906	.SCREW DRIVE PLATE MTG NO 4-7 X 3-16........................	EA	2
268	117	XBOZZ		3221445	27315	.PLATE INFORMATION DOZER UP-DOWN............................	EA	1
268	118	XDOZZ	5305-00-253-5614	MS21318-20	96906	.SCREW DRIVE PLATE MTG NO 4-7 X 3-16........................	EA	3
268	119	XBOZZ		3221446	27315	.PLATE INFORMATION DOZER OPERATION INFO.....................	EA	1
268	120	XDOZZ	5310-00-880-7744	MS51967-5	96906	.NUT,PLAIN,HEXAGON HEATER MTG 5-16-18.......................	EA	3
268	121	XDOZZ	5310-00-889-2527	MS45904-72	96906	.WASHER,LOCK HEATER MTG 5-16 INCH...........................	EA	3
268	122	XDOZZ	5305-00-225-9081	MS90725-36	96906	.SCREW CAP HEXAGON HEATER MTG 5-16-18.......................	EA	3
268	123	XDOZZ	5310-00-087-7493	MS27183-13	96906	.WASHER FLAT HEATER MTG 3-8 INCH............................	EA	3
268	124	XDOZZ		182244D2	27315	.SPACER HEATER MTG..	EA	2
268	125	XDOZZ	5310-00-761-6882	MS51967-2	96906	.NUT,PLAIN,HEXAGON HEATER MOUNT 1-4-20......................	EA	2
268	126	XDOZZ	5310-00-067-6357	MD45904-65	96906	.WASHER,LOCK HEATER MOUNT 1-4 INCH..........................	EA	2
268	127	XDOZZ	5305-00-071-2238	MS90725-13	96906	.SCREW CAP HEXAGON HEATER MOUNT 1-4-20......................	EA	2
268	128	XDOZZ	5310-00-087-7493	MS27183-13	96906	.WASHEWR FLAT HEATER MOUNT 1-4 INCH.........................	EA	2
268	129	XBOZZ		8207544	27315	.PLATE HEATER MOUNT...	EA	1
268	130	XDOZZ	5305-00-053-1117	MS24621-16	96906	.SCREW TAPPING HEATER GUARD.................................	EA	1
268	131	XDOZZ		814P26	27315	.GUARD HEATER OUTLET..	EA	1
268	132	XDOZZ	5310-00-732-0558	MS51967-8	96906	.NUT,PLAIN,HEXAGON SEAT SUPPORT MTG 3-8-16..................	EA	4
268	133	XDOZZ	5310-00-637-9541	MS35338-46	96906	.WASHER,LOCK SEAT SUPPORT MTG 3-8 INCH......................	EA	4
268	134	XDOZZ	5305-00-984-5653	MS35206-313	96906	.SCREW,MACHINE SEAT SUPPORT MTG 3-8-16......................	EA	4
268	135	XDOZZ		8164261	27315	.STAND SUPPORT SEAT...	EA	1
268	136	XDOZZ	5305-00-253-5614	MS21318-20	96906	.SCREW DRIVE PLATE MTG......................................	EA	4
268	137	XBOZZ		320457	27315	.PLATE INSTRUMENT FRONT AXLE LOCKOUT........................	EA	1
268	138	XDOZZ	5305-00-068-0501	MS90725-5	96906	.SCREW,CAP,HEXAGON STOP LIGHT SWITCH MTG....................	EA	2
268	139	XDOZZ	5310-00-067-6357	MS45904-69	96906	.WASHER,LOCK STOP LIGHT SWITCH MTG 1-4......................	EA	2
268	140	XDOZZ	5305-00-782-9494	MS90725-114	96906	.SCREW,CAP,HEXAGON CAB MTG 1-2-13 X 1-3-4...................	EA	8
268	141	XDOZZ	5310-00-087-7493	MS27183-13	96906	.WASHER FLAT CAB MTG 1-2 INCH...............................	EA	8
268	142	PCOZZ	3810-01-027-6650	162410	27315	.PAD,CUSHIONING CAB MTG.....................................	EA	8

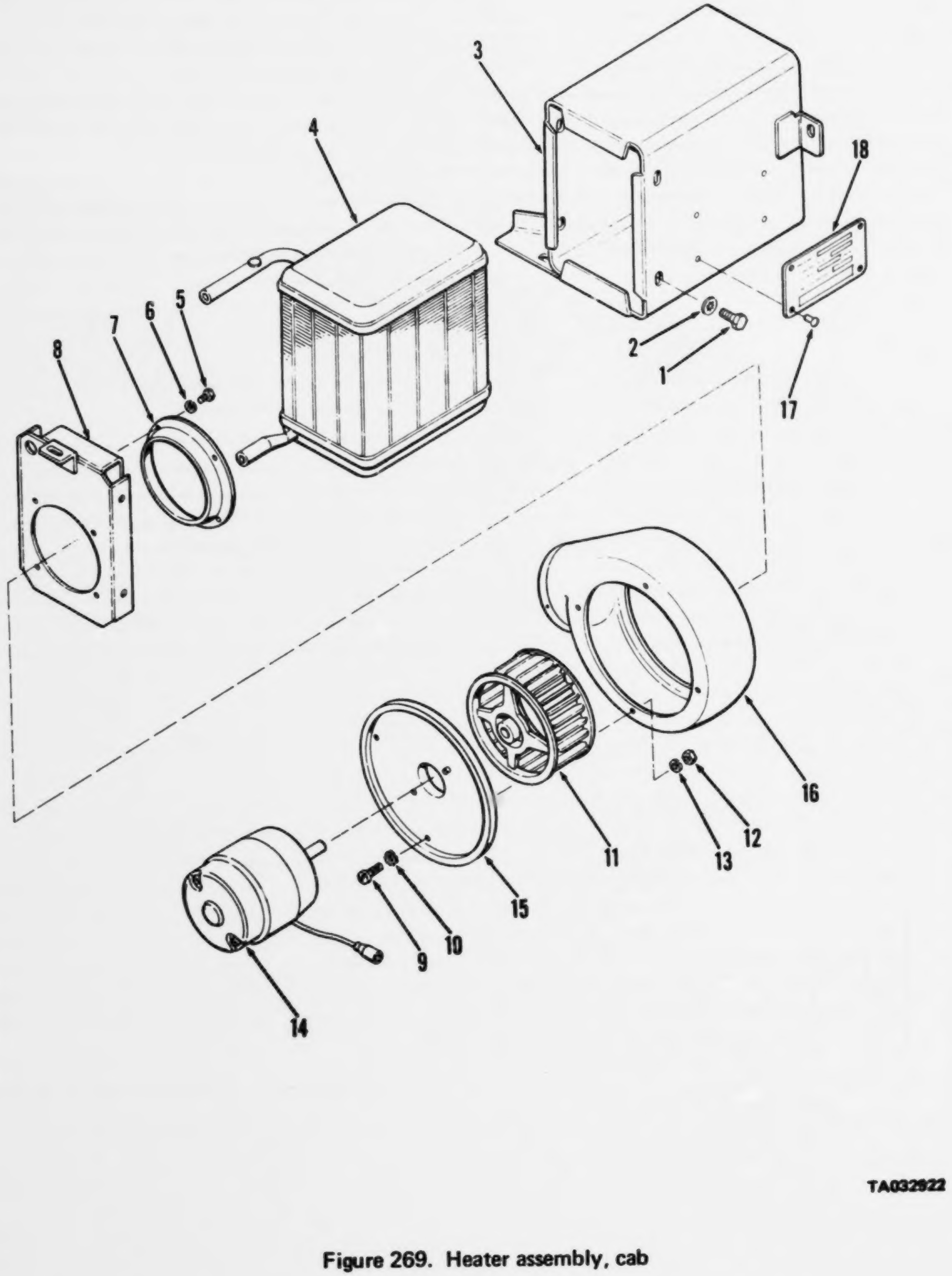

Figure 269. Heater assembly, cab

(1) ILLUSTRATION (a) FIG NO.	(b) ITEM NO.	(2) SMR CODE	(3) NATIONAL STOCK NUMBER	(4) PART NUMBER	(5) FSCM	(6) DESCRIPTION USABLE ON CODE	(7) U/M	(8) QTY INC IN UNIT
						FUNCTIONAL GROUP 72 CAB ASSEMBLY AND RELATED PARTS		
269		PBOZZ	2540-00-869-0424	8712418	19207	.HEATER ASSEMBLYCAB CARRIER....................................	EA	1
269	1	XDOZZ	5306-00-225-8494	MS90725-29	96906	..BOLT MACHINE 5-16-1-2 JACKET MTG..........................	EA	5
269	2	XDOZZ	5310-00-167-0721	MS35333-41	96906	..WASHER LOCK 5-16 JACKET MTG...............................	EA	5
269	3	XAOZZ		8712419	19207	..JACKET HEATER...	EA	1
269	4	XAODD		8719876-1	19207	..CORE AND TANK CAB HEATER..................................	EA	1
269	5	XDOZZ	5305-00-988-1721	MS35206-277	96906	..SCREW,MACHINE 1-4-20X3-8 FLANGE MTG.......................	EA	4
269	6	XDOZZ	5310-00-209-0786	MS35335-33	96906	..WASHER LOCK INT 1-4 FLANGE MTG............................	EA	4
269	7	XAOZZ		8719882	19207	..FLANGE HOUSING CAB HEATER.................................	EA	1
269	8	XDOZZ		8719877	19207	..RETAINER JACKET CAB HEATER................................	EA	1
269	9	XDOZZ	5305-00-988-1721	MS35206-277	96906	..SCREW,MACHINE 1-4-20X3-8 FLANGE MTG.......................	EA	4
269	10	XDOZZ	5310-00-209-0786	MS35335-33	96906	..WASHER LOCK 1-4 FLANGE MTG................................	EA	4
269	11	XBOZZ	2540-00-318-0155	8719880	19207	..IMPELLER,FAN CAB HEATER...................................	EA	1
269	12	XDOZZ	5310-00-934-9757	MS35649-282	96906	..NUT,PLAIN,HEXAGON NO 8-32 MOTOR MTG.......................	EA	2
269	13	XDOZZ	5310-00-559-0070	MS35333-38	96906	..WASHER LOCK NO 8 MOTOR MTG................................	EA	2
269	14	PAOZZ	6105-00-512-9225	8720660	19207	..MOTOR DIRECT CAB HEATER...................................	EA	1
269	15	XDOZZ		8719879	19207	..FLANGE HEATER...	EA	1
269	16	XAOZZ		10885172	19207	..HOUSING HEATER..	EA	1
269	17	XDOZZ	5320-01-027-2039	70225	92878	..RIVET,TUBULAR PLATE MTG...................................	EA	4
269	18	XBOZZ	9905-00-626-0013	8711121	19207	..PLATE DATA CAB HEATER.....................................	EA	1

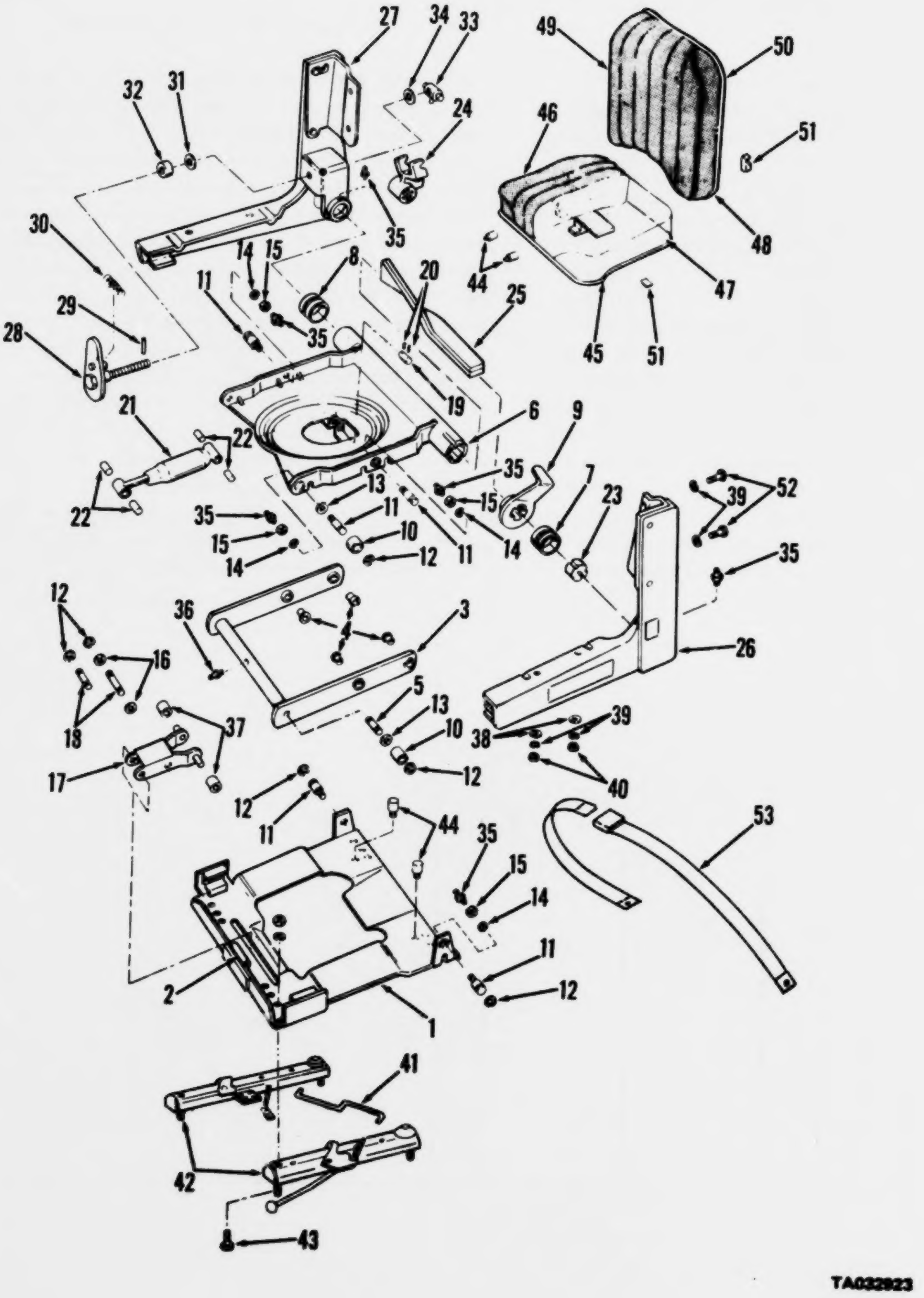

Figure 270. Seat assembly

(1) ILLUSTRATION (a) FIG NO.	(b) ITEM NO.	(2) SMR CODE	(3) NATIONAL STOCK NUMBER	(4) PART NUMBER	(5) FSCM	(6) DESCRIPTION USABLE ON CODE	(7) U/M	(8) QTY INC IN UNIT
						FUNCTIONAL GROUP 72 CAB ASSEMBLY AND RELATED PARTS		
270		AOOOO		42829-002	71044	.SEAT ASSY CAB ASSEMBLY	EA	1
270	1	XBOZZ		27901-001	71044	..BASE ASSY W/BRG SEAT ASSY	EA	1
270	2	XDOZZ		23838-801	71044	...BEARING BASE ASSY	EA	2
270	3	XBOZZ		25770-806	71044	..OUT LEVER ASSY W/PINS & BEARING	EA	1
270	4	XDOZZ		26020-801	71044	...BRG FLANGED OUTER LEVER ASSY	EA	4
270	5	XBOZZ		25779-801	71044	...PIN DRIVE OUTER LEVER ASSY	EA	2
270	6	XBOZZ		34044-001	71044	..LEVER CENTER SEAT ASSY	EA	1
270	7	XBOZZ		27191-801	71044	...HOUSING BEARING CENTER LEVER ASSY	EA	1
270	8	XBOZZ		25775-801	71044	...HOUSING BRG RH CENTER LEVER ASSY	EA	1
270	9	XBOZZ		31015-801	71044	...RIDE LEVEL IND CENTER LEVER ASSY	EA	1
270	10	PAOZZ	3120-00-435-1160	25650-801	71044	..ROLLER SEAT ASSY	EA	4
270	11	XBOZZ		25777-801	71044	..STUD SEAT ASSY	EA	6
270	12	XDOZZ		25989-801	71044	..RING SNAP SEAT ASSY	EA	10
270	13	XDOZZ		26988-801	71044	..WASHER PLAIN SEAT ASSY	EA	4
270	14	PAOZZ	5310-00-007-3018	353019-801	71044	..WASHER,LOCK SEAT ASSY	EA	6
270	15	XDOZZ	5310-00-732-0558	350003-801	71044	..NUT PLAIN,HEXAGON SEAT ASSY-3/8-16	EA	6
270	16	XDOZZ	5310-00-007-6159	353042-801	71044	..WASHER,FLAT 17/32X7/8	EA	2
270		XDOZZ		60470-001	71044	..LEVER ASSY SHK SEAT ASSY	EA	1
270	17	XDOZZ		1-60470-001	71044	...SHOCK LVR ASSY SEAT ASSY	EA	1
270	18	XBOZZ		25790-802	71044	...SHAFT HINGE SHK BEARING KIT SHOCK ABS	EA	1
270	19	XBOZZ		25789-802	71044	..SHAFT HINGE SHK REAR	EA	1
270	20	XBOZZ		22525-801	71044	..PIN ROLL SEAT ASSY	EA	2
270	21	XBOZZ		1-60475-001	71044	...SHOCK ABS ASSY SEAT ASSY	EA	1
270		PAOZZ	3110-01-028-8851	60477-001	71044	..BEARING SHOCK ABSORBER	EA	1
270	22	XDOZZ		22506-801	71044	...BEARING FLGD BEARING KIT SHOCK ABS	EA	4
270	23	XBOZZ		27159-802	71044	..RETAINER T-BAR SEAT ASSY	EA	1
270	24	XBOZZ		27160-802	71044	..YOKE ADJUSTER SEAT ASSY	EA	1
270	25	XDOZZ		61153-001	71044	..TORSION BAR SET SEAT ASSY	EA	1
270	26	XBOZZ		42372-003	71044	..SIDE PANEL ASSY LEFT HAND	EA	1
270	27	XBOZZ		42375-004	71044	..SIDE PANEL ASSY RIGHT HAND	EA	1
270	28	XDOZZ		28776-801	71044	..ADJ SCREW & SEAT ASSY	EA	1
270	29	XDOZZ		20816-801	71044	...PIN DRIVE ADJ SCREW & LEVER ASSY	EA	1
270	30	PAOZZ	5310-01-028-9042	26445-802	71044	...SPRING TENSION ADJ SCREW & LEVER ASSY	EA	1
270	31	XBOZZ		26827-801	71044	..WASHER PLAIN SEAT ASSY	EA	1
270	32	XDOZZ		23308-801	71044	..BRG THRUST BALL SEAT ASSY	EA	1
270	33	XBOZZ		25810-801	71044	..PIN ADJUSTER SEAT ASSY	EA	1
270	34	XDOZZ	5310-01-028-6341	353031-801	71044	..WASHER PLAIN 5/16X11/16X1-1/4 SEAT ASSY	EA	1
270	35	XBOZZ	4730-01-028-9239	27193-801	71044	..FITTING LUBE 3/32 SHANK	EA	9

(1) ILLUSTRATION (a) FIG NO.	(b) ITEM NO.	(2) SMR CODE	(3) NATIONAL STOCK NUMBER	(4) PART NUMBER	(5) FSCM	(6) DESCRIPTION USABLE ON CODE	(7) U/M	(8) QTY INC IN UNIT
270	36	XBOZZ	4730-00-279-0353	5C33	36251	..FITTING LUBE 15/64 SHANK................................	EA	1
270	37	XDOZZ		30064-801	71044	..BEARING ROLLER SEAT ASSY................................	EA	2
270	38	XDOZZ	5310-01-038-4660	353C43-8C1	71044	..WASHER PLAIN 5/16................................	EA	4
270	39	PAOZZ	5310-01-028-9037	353024-8C1	71044	..WASHER LOCK SEAT ASSY-5/16................................	EA	12
270	40	XBOZZ	5310-01-028-6368	351119-801	71044	..NUT PLAIN HEXAGON 5/16-18................................	EA	8
270	41	XBOZZ		42065-041	71044	..LATCH WIRE KIT SEAT ASSY................................	EA	1
270	42	XBOZZ		44618-001	71044	..SLIDE RAIL KIT SEAT ASSY................................	EA	1
270	43	XBOZZ	5305-01-029-0673	351152-8C1	71044	..SCREW CAP HEXAGON 5/16-18X5/8................................	EA	4
270	44	XDOZZ		27194-801	71044	..BUMPER SEAT ASSY................................	EA	4
270	45	XDOZZ	2540-00-405-7519	25998-503	71044	..CUSHION,SEAT SEAT ASSY................................	EA	1
270	46	XDOZZ		25958-502	71044	..COVER & PAD KIT SEAT ASSY................................	EA	1
270	47	XDOZZ		25956-806	71044	..PAN ASSY SEAT ASSY................................	EA	1
270	48	XDOZZ	2540-00-405-7516	28630-503	71044	..CUSHION,SEAT BACK BLK................................	EA	1
270	49	XDOZZ		28630-502	71044	..BACK COVER ASSY SEAT ASSY................................	EA	1
270	50	XDOZZ		28346-802	71044	..PAN ASSY SEAT ASSY................................	EA	1
270	51	XBOZZ	5340-01-029-7637	27040-801	71044	..CLIP FASTENER CUSHION-SEAT ASSY................................	EA	12
270	52	XBOZZ	5305-01-029-0674	351199-001	71044	..SCREW CAP HEXAGON 5/16-18X1.00................................	EA	4
270	53	PAOZZ		42551-001	71044	..SEAT BELT KIT SEAT ASSY................................	EA	1
270	54	XBOZZ		44614-001	71044	..SLIDE RAIL KIT SEAT ASSY................................	EA	1

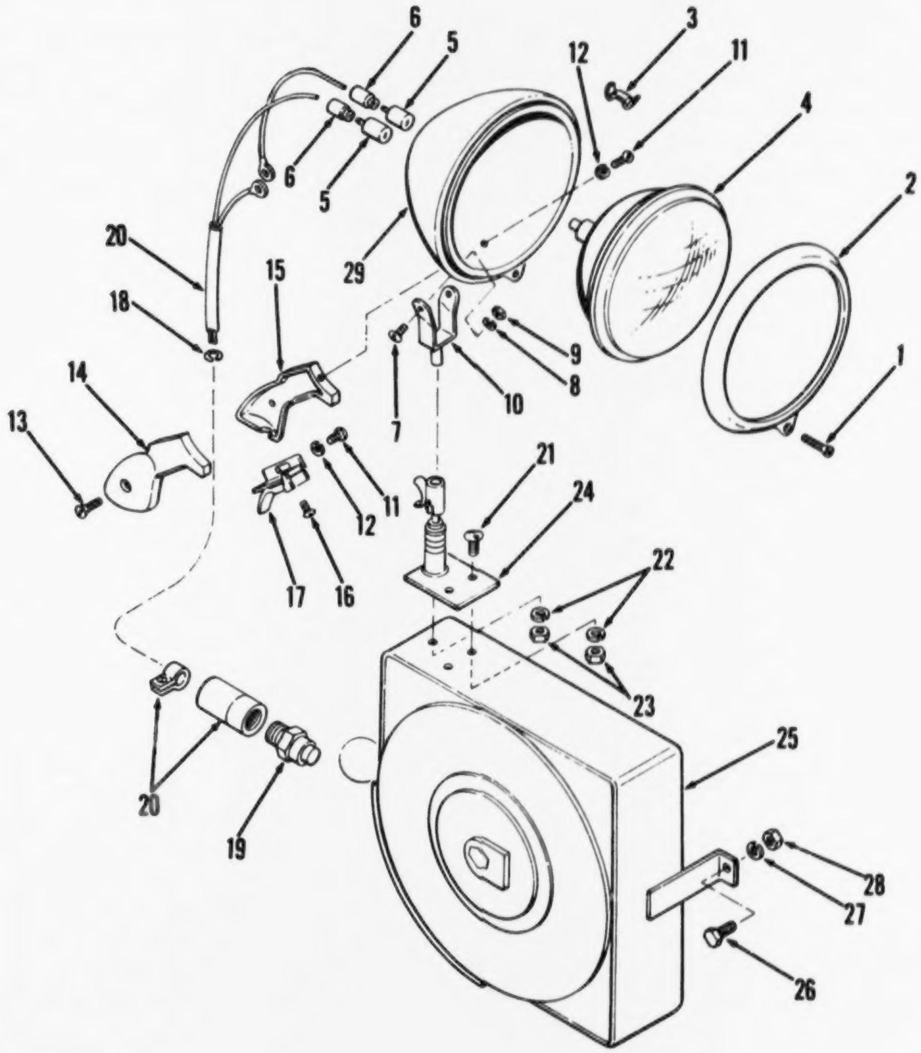

Figure 271. Light assembly, trouble

(1) ILLUSTRATION (a) FIG NO.	(b) ITEM NO.	(2) SMR CODE	(3) NATIONAL STOCK NUMBER	(4) PART NUMBER	(5) FSCM	(6) DESCRIPTION USABLE ON CODE	(7) U/M	(8) QTY INC IN UNIT
						FUNCTIONAL GROUP 72 CAB ASSEMBLY AND RELATED PARTS		
271		XDOZZ		610139-1	33525	.LIGHT ASSEMBLY TROUBLE	EA	1
271	1	XBOZZ	5305-00-052-6875	MS24627-51	96906	..SCREW,TAPPING LAMP RIM	EA	1
271	2	XBOZZ		610140	33525	..RIM LAMP TROUBLE LIGHT	EA	1
271	3	XBOZZ		5A4751	33525	..CLIP RIM LAMP	EA	4
271	4	PAOZZ	6240-00-643-0687	MS17165-4578	96906	..LAMP,INCANDESCENT 24 VOLT TROUBLE	EA	1
271	5	PAOZZ	5935-00-034-8009	8338565	19207	..CONNECTOR,PLUG LAMP WIRE	EA	2
271	6	PAOZZ	5935-00-167-7775	MS27144-1	96906	..CONNECTOR,PLUG LAMP WIRE	EA	2
271	7	XBOZZ	5305-01-045-4157	526853	33525	..SCREW MACHINE LIGHT MOUNT	EA	1
271	8	XDOZZ		527486	33525	..WASHER LOCK LIGHT MOUNT	EA	1
271	9	XDOZZ		527259	33525	..NUT PLAIN HEXAGON LIGHT MOUNT	EA	1
271	10	XOOZZ		610141	33525	..MOUNT LIGHT TROUBLE	EA	1
271	11	XBOZZ	5305-01-045-4157	526853	33525	..SCREW MACHINE HANDLE	EA	5
271	12	XBOZZ		527486	33525	..WASHER LOCK HANDLE	EA	5
271	13	XBOZZ	5305-00-429-1115	526521	80538	..SCREW MACHINE HANDLE	EA	2
271	14	XBOZZ		528277	33525	..HANDLE HALF PISTOL GRIP	EA	1
271	15	XBOZZ		528278	33525	..HANDLE HALF PISTOL GRIP	EA	1
271	16	XBOZZ		526427	33525	..SCREW MACHINE SWITCH	EA	2
271	17	PAOZZ	5930-00-105-5474	5C7266	80538	..SWITCH,TRIGGER TROUBLE LIGHT	EA	1
271	18	XBOZZ		528280	33525	..RING RETAINING CABLE	EA	1
271	19	PAOZZ	5935-01-022-7744	MS3106E16-115X	96906	CONNECTOR PLUG ELECTRICAL CABLE	EA	1
271	20	XAOZZ		518258	33525	..CABLE LIGHT TROUBLE 40 FT	FT	1
271	21	XBOZZ	5305-00-109-0282	726-1610	05381	..SCREW,MACHINE BRACKET	EA	1
271	22	PAOZZ	5310-00-202-1862	5C33-160C	80538	..WASHER,LOCK BRACKET	EA	1
271	23	XBOZZ	5310-00-202-1876	1P07-160C	80538	..NUT,HEX BRACKET	EA	2
271	24	XDOZZ	6220-00-871-6154	611105	80538	..BRACKET,SPOTLIGHT TROUBLE LIGHT	EA	1
271	25	XDOZZ	6230-00-419-5803	528275	80538	..REEL ASSEMBLY TROUBLE LIGHT	EA	1
271	26	XBOZZ	5305-00-269-3209	MS90725-58	96906	..SCREW,CAP,HEXAGON TROUBLE LIGHT MTG	EA	2
271	27	PAOZZ	5310-00-637-9541	MS35338-46	96906	..WASHER,LOCK TROUBLE LIGHT MTG	EA	2
271	28	XBOZZ	5310-00-732-0558	MS51967-8	96906	..NUT,PLAIN,HEXAGON TROUBLE LIGHT MTG 3-8.6	EA	2
271	29	PAOZZ	6230-00-895-3192	610142	33525	..LIGHT,EXTENSION CAB	EA	1

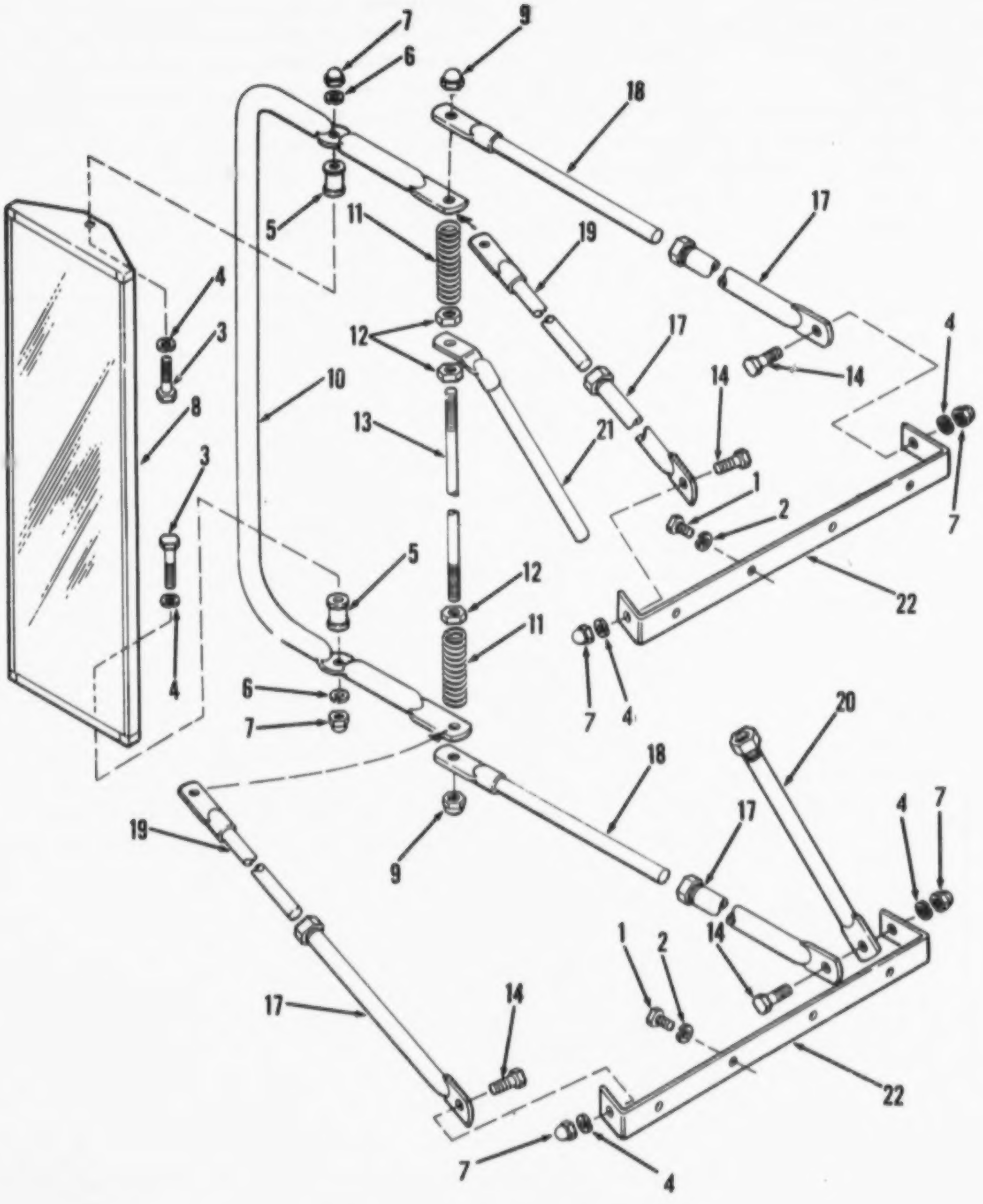

Figure 272. Mirror assembly, carrier cab

(1) ILLUSTRATION (a) FIG NO.	(b) ITEM NO.	(2) SMR CODE	(3) NATIONAL STOCK NUMBER	(4) PART NUMBER	(5) FSCM	(6) DESCRIPTION USABLE ON CODE	(7) U/M	(8) QTY INC IN UNIT
						FUNCTIONAL GROUP 72 CAB ASSEMBLY AND RELATED PARTS		
272	1	XBOZZ		MS90726-3	96906	.SCREW,CAP,HEX HD: 1/4-28 X 1/2,MIRROW MTG..................	EA	4
272	2	PAOZZ	5310-00-582-5965	MS35338-44	96906	.WASHER,LOCK MIRROR MTG....................................	EA	4
272		PAOZZ	2540-01-027-9012	158FXU	30226	.MIRROR ASSEMBLY CAB DOOR..................................	EA	1
272	3	XBOZZ	5305-00-267-8576	MS90726-11	96906	..SCREW,CAP,HEXAGON 1-4-28-1-3-8 MIRROR......................	EA	2
272	4	XDOZZ	5310-00-582-5965	MS35338-44	96906	..WASHER LOCK 1-4 MIRROR ASSY..............................	EA	5
272	5	XDOZZ		158-11	30226	..SPACER MIRROR ASSY.......................................	EA	2
272	6	XDOZZ	5310-00-582-5965	MS35338-44	96906	..WASHER LOCK SHAKEPROOF....................................	EA	2
272	7	XBOZZ		158-14	30226	..NUT ACORN 1-4-28 MIRROR ASSY..............................	EA	5
272	8	PAOZZ	2540-00-788-5637	MS53015-2	96906	..MIRROR HEAD AY MIRROR ASSY................................	EA	1
272	9	XBOZZ		158J1	30226	..NUT ACORN 3-8-16 MIRROR ASSY..............................	EA	2
272	10	XDOZZ		158H2	30226	..LOOP DETENT AY MIRROR ASSY................................	EA	1
272	11	XDOZZ		158I	30226	..SPRING COMP 3 INCH..	EA	2
272	12	XBOZZ	5310-00-851-2692	MS35691-17	96906	..NUT JAM 3-8-16 MIRROR ASSY................................	EA	3
272	13	XDOZZ		158E	30226	..ROD PIVOT MIRROR ASSY.....................................	EA	1
272	14	XBOZZ	5305-01-028-9044	158-15	30226	..SCREW CAP HX HD 1-4-28-3-4 MIRROR ASSY....................	EA	4
272	15	XDOZZ		Z158-5	30226	..WASHER,LOCK 1/4 LEG MTG...................................	EA	4
272	16	XDOZZ		158-14	30226	..NUT,ACORN 1/4 LEG MTG.....................	EA	4
272	17	XDOZZ		158B2	30226	..LEG 14 INCH OUTER THREADED................................	EA	4
272	18	XDOZZ		158C	30226	..LEG 11 INCH INNER COINED..................................	EA	2
272	19	XDOZZ		158D	30226	..LEG 11 INCH INNER PLAIN...................................	EA	2
272	20	XDOZZ		158F1	30226	..BRACE OUTER CRS W-NUT & GLAND.............................	EA	1
272	21	XDOZZ		158G	02261	..BRACE INNER CRS MIRROR ASSY...............................	EA	1
272	22	XDOZZ		158A	30226	..BRACKET MTG MIRROR ASSY...................................	EA	2

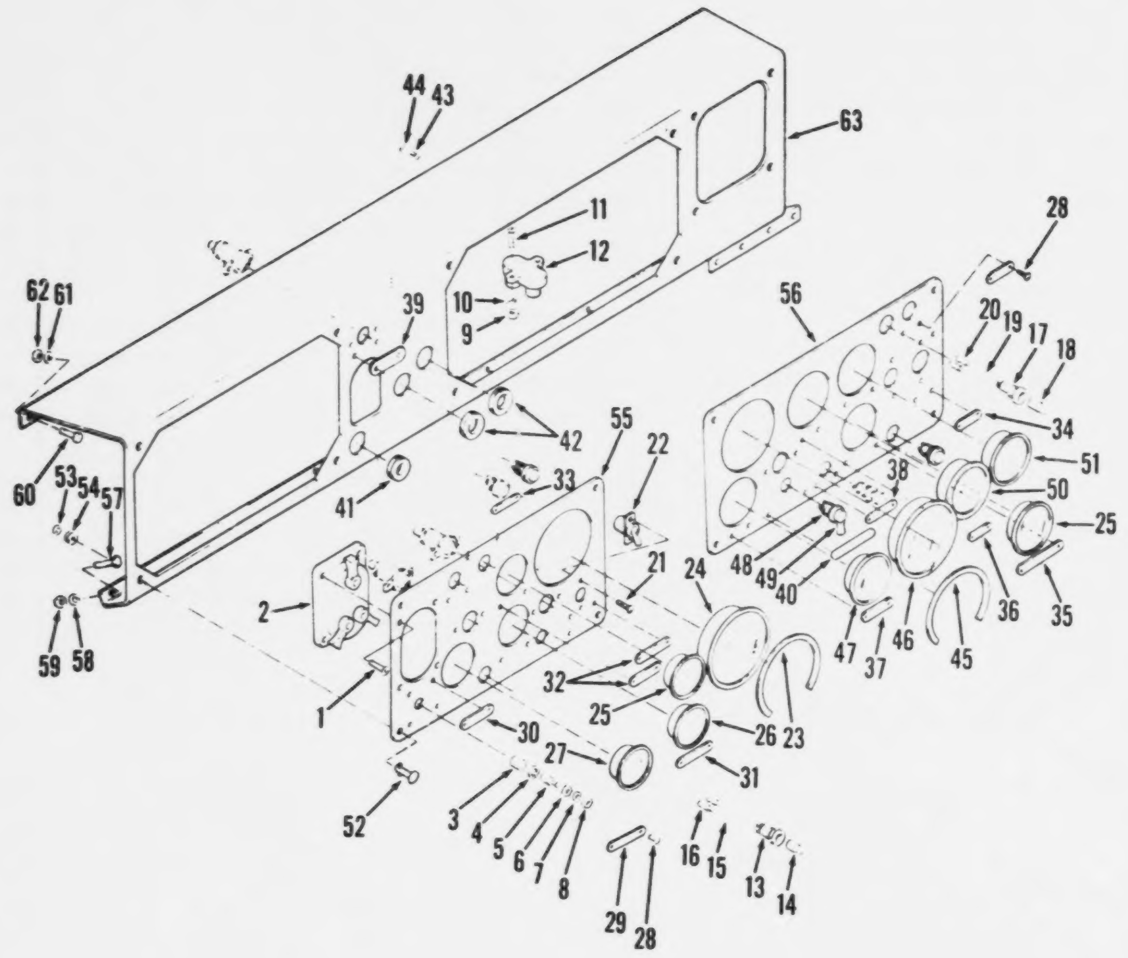

Figure 273. Board assembly, instrument panel

(1) ILLUSTRATION (a) FIG NO.	(b) ITEM NO.	(2) SMR CODE	(3) FEDERAL STOCK NUMBER	(4) PART NUMBER	(5) FSCM	(6) DESCRIPTION USABLE ON CODE	(7) U/M	(8) QTY INC IN UNIT
						FUNCTIONAL GROUP 72 CAB ASSEMBLY AND RELATED PARTS		
273		XDOZZ		8100N174	27315	.BOARD ASSY INST CAB ASSY	EA	1
273	1	XBOZZ	5305-00-989-7434	MS35207-263	96906	..SCREW MACHINE NO10-32X1/2 LIGHT SWITCH	EA	4
273	2	PAOZZ	2590-00-307-8856	MS51113-1	96906	..SWITCH VEH LGT INSTR PANEL	EA	1
273		PAOZZ	5930-00-791-5311	4812	81263	..SWITCH STARTER INSTR PANEL	EA	1
273	3	XAOZZ		45933	81263	...BASE ASSY SWITCH ASSY	EA	1
273	4	XAOZZ		42196	81263	...GASKET SWITCH ASSY	EA	1
273	5	XAOZZ		45935	81263	...CUP & PLUNGER SWITCH ASSY	EA	1
273	6	XBOZZ		51898B	81263	....NUT SPECIAL HEX SWITCH ASSY	EA	1
273	7	XBOZZ		40097	81263	....WASHER LOCK SWITCH ASSY	EA	1
273	8	XBOZZ		40073	81263	....NUT SPECIAL HEX SWITCH ASSY	EA	1
273	9	XBOZZ	5310-00-934-9757	MS35649-282	96906	..NUT,PLAIN,HEXAGON CIRCUIT BREAKER MTG	EA	6
273	10	PAOZZ	5310-00-045-3299	MS35338-42	96906	..WASHER,LOCK CIRCUIT BREAKER BTG NO 8	EA	6
273	11	XBOZZ	5305-00-984-6200	MS35206-252	96906	..SCREW,MACHINE CIRCUIT BREAKER MTG 8-32	EA	6
273	12	PAOZZ	5925-00-026-4767	MS39062-1	96906	..CIRCUIT BREAKER INSTR PANEL	EA	3
273		PAOZZ		LH76LC15RD1	27315	..INDICATOR LIGHT INSTR PANEL	EA	3
273	13	PAOZZ		56Q4D1	27315	...INDICATOR,LIGHT LIGHT IND ASSY	EA	1
273	14	PAOZZ	5961-00-433-1607	GE5	09214	...TRANSISTOR LIGHT IND ASSY	EA	1
273	15	PAOZZ		56Q4D1	27315	...LIGHT,INDICATOR LIGHT IND ASSY	EA	2
273	16	PAOZZ	5935-00-167-7775	MS27144-1	96906	..CONNECTOR,PLUG,ELEC LIGHT IND ASSY	EA	2
273		MOOOO		LH76LC15GD1	27315	..LIGHT IND INSTR PANEL	EA	2
273	17	PAOZZ		1-56Q4D2	27315	...SOCKET W/LENS LIGHT IND ASSY	EA	1
273	18	PAOZZ	5961-00-433-1607	GE5	09214	...TRANSISTOR LIGHT IND ASSY	EA	1
273	19	PAOZZ		56Q4D2	27315	...LIGHT,INDICATOR LIGHT IND ASSY	EA	1
273	20	PAOZZ	5935-00-167-7775	MS27144-1	96906	...CONNECTOR,PLUG,ELEC LIGHT IND ASSY	EA	2
273	21	XBOZZ	5305-00-988-1721	MS35206-277	96906	..SCREW,MACHINE TOGGLE SWITCH 8-32-3.8	EA	2
273	22	PAOZZ	5930-00-296-6318	MS39061-1	96906	..SWITCH,TOGGLE INSTR PANEL	EA	1
273	23	XBOZZ		32Z1442	27315	..WARNING PLATE SPEEDOMETER	EA	1
273	24	PAOZZ	6680-00-933-3599	MS39021-2	96906	..SPEEDOMETER INSTR PANEL	EA	1
273	25	PAOZZ	6620-00-115-9042	MS24540-2	96906	..INDICATOR,PRESSURE INSTR PANEL	EA	2
273	26	PAOZZ	6685-00-936-2138	MS24542-2	96906	..INDICATOR TEMP INSTR PANEL	EA	1
273	27	PAOZZ	6625-00-321-6365	MS24532-2	96906	..INDICATOR VOLT INSTR PANEL	EA	1
273	28	XBOZZ		20Z42D1	27315	..SCREW DRIVE 2-8-3-16 INSTR PANEL	EA	26
273	29	XBOZZ		32Q433D5	27315	..PLATE DATA INSTR PANEL	EA	1
273	30	XBOZZ		32Q433D13	27315	..PLATE DATA LIGHTS	EA	1
273	31	XBOZZ		32Q433D7	27315	..PLATE DATA ENGINE	EA	1
273	32	XBOZZ		32Q433D4	27315	..PLATE DATA HEATER	EA	1
273	33	XBOZZ		32Q433D12	27315	..PLATE DATA TURN	EA	2
273	34	XBOZZ		32Q433D18	27315	..PLATE DATA OUTLET	EA	1
273	35	XBOZZ		32Q433D3	27315	..PLATE DATA CONVERTER	EA	2
273	36	XDOZZ		32Q433D11	27315	..PLATE,DATA: FUEL	EA	1
273	37	XBOZZ		32Q433D10	27315	..PLATE DATA FUEL	EA	1

(1) ILLUSTRATION (a) FIG NO.	(b) ITEM NO.	(2) SMR CODE	(3) FEDERAL STOCK NUMBER	(4) PART NUMBER	(5) FSCM	(6) DESCRIPTION USABLE ON CODE	(7) U/M	(8) QTY INC IN UNIT
273	38	XBOZZ		32Q433D9	27315	..PLATE DATA WIPER	EA	1
273	39	XBOZZ		32Q433D6	27315	..PLATE DATA HI BEAM	EA	1
273	40	XBOZZ		32Q433D1	27315	..PLATE DATA MAIN SWITCH	EA	1
273	41	PCOZZ	5325-00-281-1557	MS35490-17	96906	..GROMMET,RUBBER INSTR PANEL	EA	1
273	42	PCOZZ		MS35490-22	96906	..GROMMET,RUBBER INSTR PANEL	EA	2
273	43	XBOZZ	5305-00-984-6189	MS35206-241	96906	..SCREW,MACHINE 8-1-4 LAMP ASSY	EA	8
273	44	PAOZZ	5310-00-045-3299	MS35338-42	96906	..WASHER,LOCK LAMP ASSY	EA	8
273	58	PAOZZ	5310-00-582-5965	MS35338-44	96906	..WASHER,LOCK 1-4 INSTR PANEL MTG	EA	6
273	59	XBOZZ	5310-00-997-1888	MS35649-2252	96906	..NUT PLAIN HEXAGON 1-4-20 INSTR PANEL MTG	EA	6
273	60	PAOZZ	5305-00-269-3208	MS90725-57	96906	..SCREW CAP HX HD 1-4-20-5-8 INSTR PANEL	EA	4
273	61	PAOZZ	5310-00-582-5965	MS35338-44	96906	..WASHER,LOCK 1-4 INSTR PANEL MTG	EA	4
273	62	PAOZZ	5310-00-997-1888	MS35649-2252	96906	..NUT PLAIN HEXAGON 1-4-20 INSTR PANEL MTG	EA	4
273	63	XDOZZ		827N630F1	27315	..PANEL INSTR BOARD INSTR	EA	1

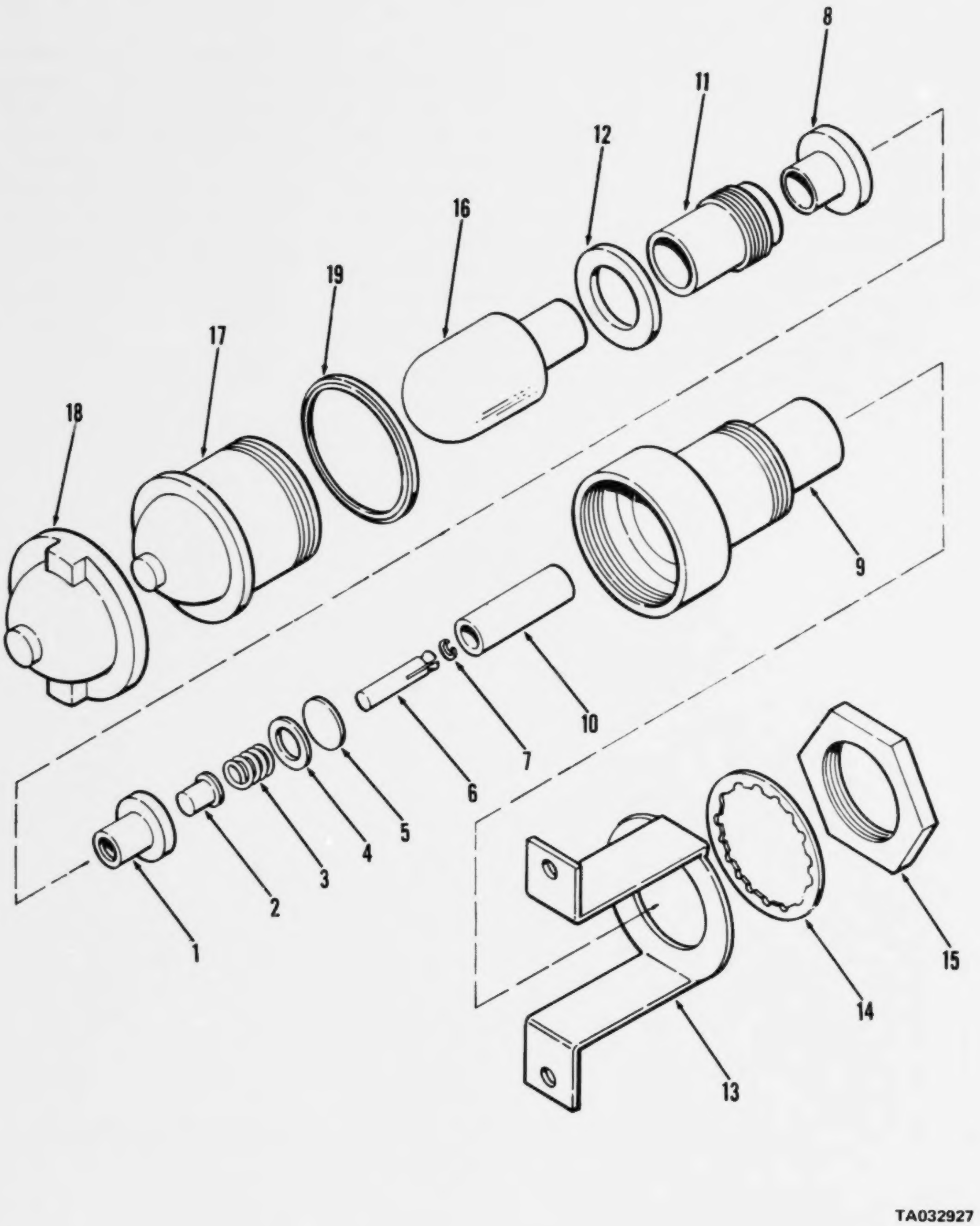

Figure 274. Lamp assembly, instrument panel

(1) ILLUSTRATION (a) FIG NO.	(b) ITEM NO.	(2) SMR CODE	(3) NATIONAL STOCK NUMBER	(4) PART NUMBER	(5) FSCM	(6) DESCRIPTION USABLE ON CODE	(7) U/M	(8) QTY INC IN UNIT
						FUNCTIONAL GROUP 72 CAB ASSEMBLY AND RELATED PARTS		
274		PAOZZ	6210-00-568-8039	161466	78947	.LIGHT,INDICATOR INSTR PANEL	EA	4
274	1	XAOZZ		160334-5	78947	..FERRULE LAMP ASSY	EA	1
274	2	XAOZZ		160334-4	78947	..CONTACT LAMP ASSY	EA	1
274	3	XAOZZ		C4357	78947	..SPRING LAMP ASSY	EA	1
274	4	XAOZZ		C4356	78947	..GASKET LAMP ASSY	EA	1
274	5	XAOZZ		160334-6	78947	..DISC LAMP ASSY	EA	1
274	6	XAOZZ		160334-3	78947	..CONNECTOR LAMP ASSY	EA	1
274	7	XOOZZ		C4402	78947	..RING RETAINING LAMP ASSY	EA	1
274	8	XAOZZ		C4355	78947	..GASKET LAMP ASSY	EA	1
274	9	XAOZZ		160403-1	78947	..HOUSING LAMP ASSY	EA	1
274	10	XAOZZ		160403-2	78947	..SLEEVE LAMP ASSY	EA	1
274	11	XAOZZ		160334-2	78947	..SOCKET LAMP ASSY	EA	1
274	12	XAOZZ		C4400	78947	..GASKET LAMP ASSY	EA	1
274	13	XOOZZ		160334-1	78947	..BRACKET MTG LAMP ASSY	EA	1
274	14	XBOZZ	5310-00-197-4508	C2494	78947	..WASHER LOCK LAMP ASSY	EA	1
274	15	XBOZZ		C4392	78947	..NUT PLAIN HEX LAMP ASSY	EA	1
274	16	PAOZZ	6240-01-035-5522	C4498	78947	..BULB LAMP ASSY	EA	1
274		PAOZZ	6210-00-327-7345	160338	78947	..LENS,LIGHT LAMP ASSY	EA	1
274	17	PAOZZ	6210-00-548-0504	160367	78947	...LENS,LIGHT LAMP ASSY	EA	1
274	18	XAOZZ		160334-8	78947	...LENS COVER LAMP ASSY	EA	1
274	19	XAOZZ		C4358	78947	..GASKET LAMP ASSY	EA	1

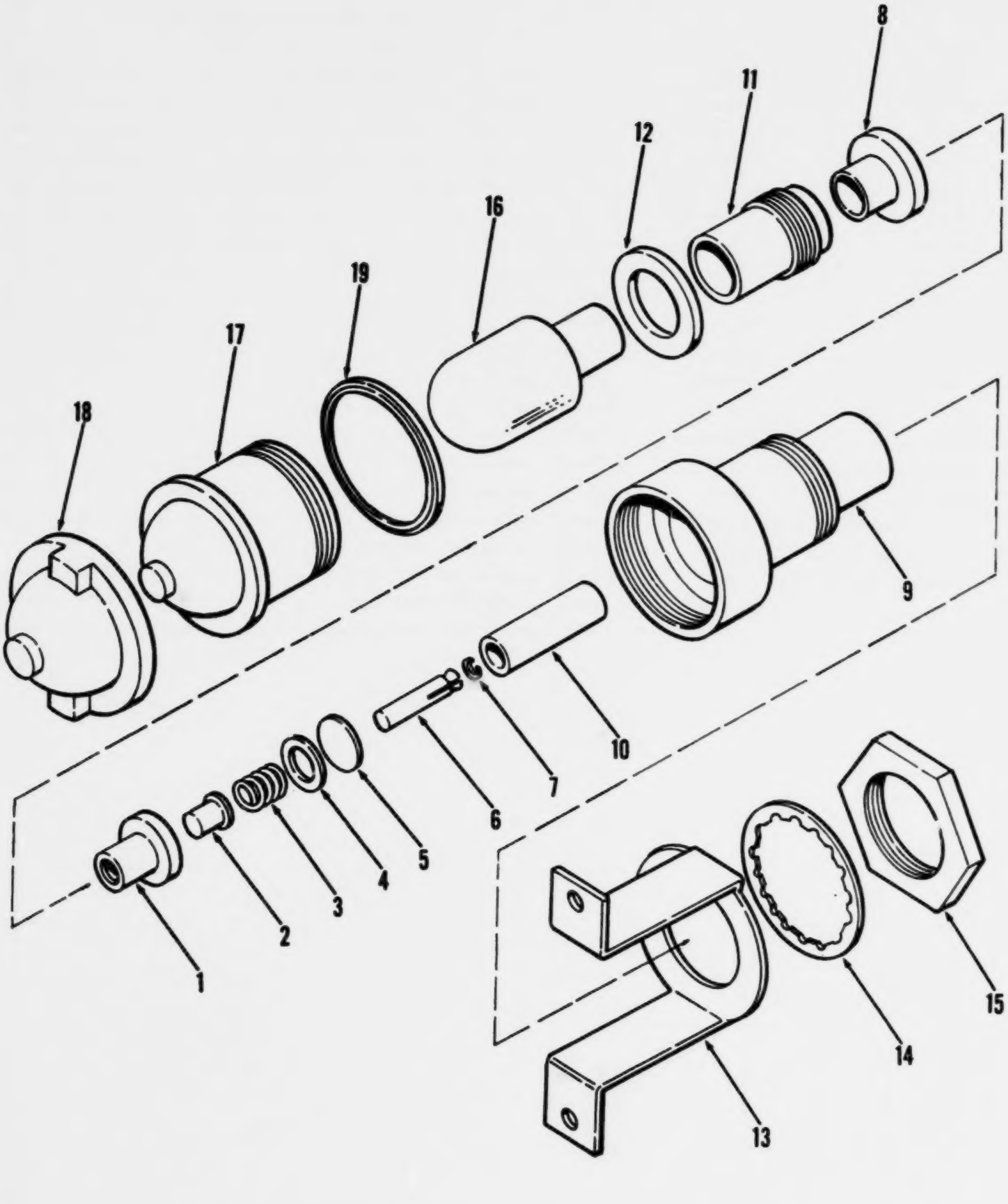

Figure 275. Lamp assembly, instrument panel

(1) ILLUSTRATION (a) FIG NO.	(b) ITEM NO.	(2) SMR CODE	(3) NATIONAL STOCK NUMBER	(4) PART NUMBER	(5) FSCM	(6) DESCRIPTION USABLE ON CODE	(7) U/M	(8) QTY INC IN UNIT
						FUNCTIONAL GROUP 72 CAB ASSEMBLY AND RELATED PARTS		
275		PAOZZ	6210-00-813-7814	161467	78947	.LIGHT,PANEL INSTR PANEL	EA	1
275	1	XAOZZ		160334-5	78947	..FERRULE LAMP ASSY	EA	1
275	2	XAOZZ		160334-4	78947	..CONTACT LAMP ASSY	EA	1
275	3	XAOZZ		C4357	78947	..SPRING LAMP ASSY	EA	1
275	4	XAOZZ		C4356	78947	..GASKET LAMP ASSY	EA	1
275	5	XAOZZ		160334-6	78947	..DISC LAMP ASSY	EA	1
275	6	XAOZZ		160334-3	78947	..CONNECTOR LAMP ASSY	EA	1
275	7	XDOZZ		C4402	78947	..RING RETAINING LAMP ASSY	EA	1
275	8	XAOZZ		C4395	78947	..GASKET LAMP ASSY	EA	1
275	9	XAOZZ		160403-1	78947	..HOUSING LAMP ASSY	EA	1
275	10	XAOZZ		160403-2	78947	..SLEEVE LAMP ASSY	EA	1
275	11	XAOZZ		160334-2	78947	..SOCKET LAMP ASSY	EA	1
275	12	XAOZZ		C4400	78947	..GASKET LAMP ASSY	EA	1
275	13	XDOZZ		160334-1	78947	..MOUNTING BRKT LAMP ASSY	EA	1
275	14	XBOZZ	5310-00-197-4508	C2494	78947	..WASHER LOCK LAMP ASSY	EA	1
275	15	XBOZZ		C4392	78947	..NUT PLAIN HEX LAMP ASSY	EA	1
275	16	PAOZZ	6240-01-039-9522	C4496	78947	..BULB LAMP ASSY	EA	1
275		PAOZZ	6210-00-337-7345	160338	78947	..LENS,LIGHT LAMP ASSY	EA	1
275	17	PAOZZ	6210-00-548-5504	160367	78947	...LENS,LIGHT LAMP ASSY	EA	1
275	18	XAOZZ		160334-9	78947	...LENS COVER LAMP ASSY	EA	1
275	19	XAOZZ		C4394	78947	..GASKET LAMP ASSY	EA	1

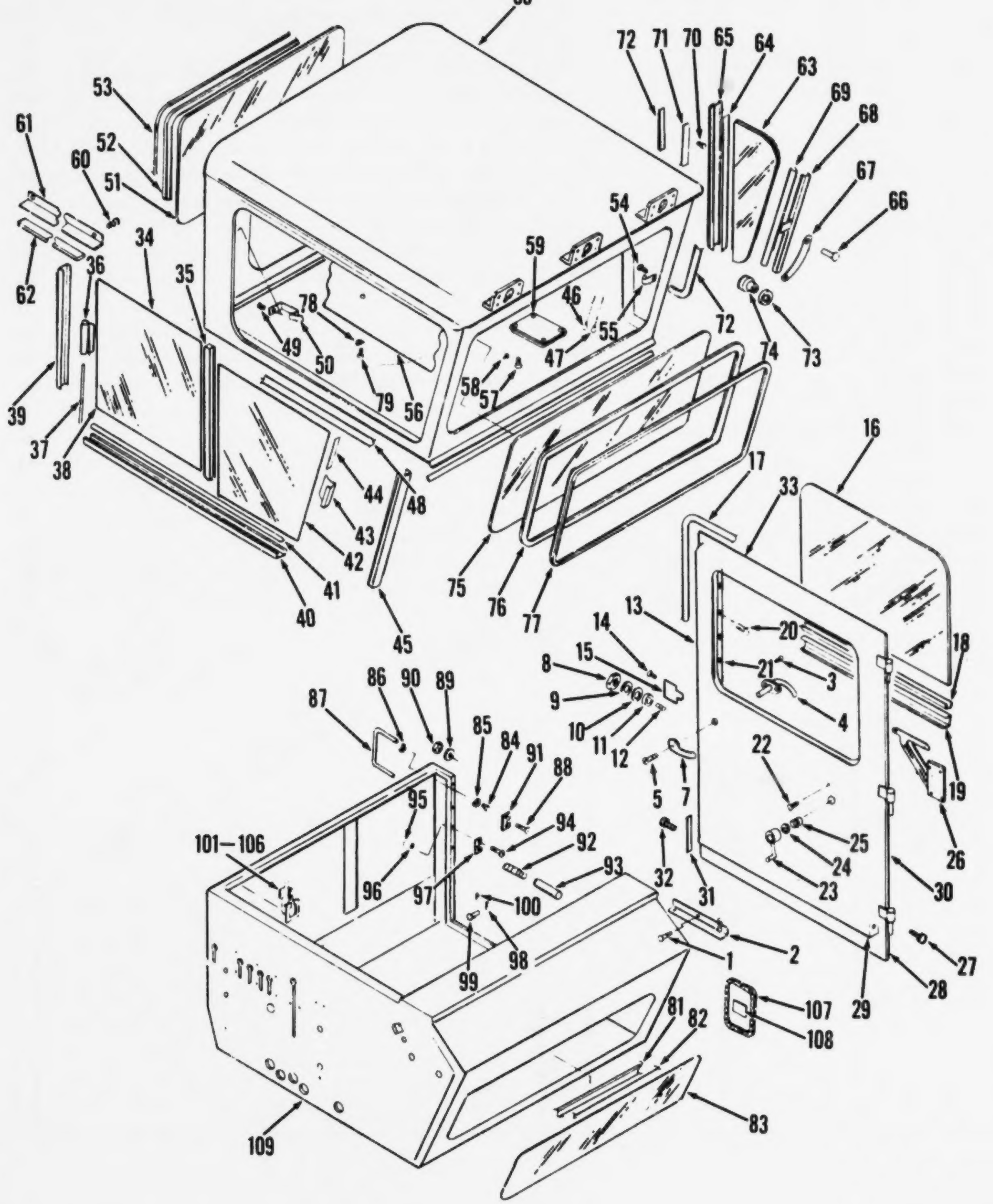

TA032929

Figure 276. Cab assembly, carrier

(1) ILLUSTRATION (a) FIG NO.	(b) ITEM NO.	(2) SMR CODE	(3) NATIONAL STOCK NUMBER	(4) PART NUMBER	(5) FSCM	(6) DESCRIPTION USABLE ON CODE	(7) U/M	(8) QTY INC IN UNIT
						FUNCTIONAL GROUP 72 CAB ASSEMBLY AND RELATED PARTS		
276		XBOFF		A140700	70281	.CAB CARRIER CAB ASSY..	EA	1
276		PBOZZ	3815-00-633-5884	A134025	70281	..DOOR ASSY CAB CARRIER..	EA	1
276	1	XBOZZ		A122983-1	70281	...SCREW MACHINE W/LKWSHR 1/4-28X1/2..............................	EA	4
276	2	XDOZZ	2540-00-471-0232	A122983	70281	...BRACKET OR CHK DOOR ASSY..	EA	1
276	3	XBOZZ		A134020-1	70281	...SCREW MACHINE OVAL HD 10-32X1/2 CTRSK........................	EA	2
276	4	XBOZZ	5340-01-044-8390	A134020	70281	...HANDLE DOOR OUTSIDE..	EA	1
276	6	XBOZZ		2502H106-2	70281	...SCREW MACHINE 12-24X1/2 DOOR HANDLE........................	EA	2
276	7	PADZZ	2540-00-014-7024	25C2H106	78252	...HANDLE,DOOR DOOR ASSY..	EA	1
276	8	XBOZZ	5310-00-891-1752	MS35691-14	96906	...NUT,PLAIN,HEXA GON ROLLER..	EA	1
276	9	PAOZZ	5310-00-728-2044	MS45904-73	96906	...WASHER,LOCK INT EXT TOOTH-5/16..	EA	1
276	10	PAOZZ	5310-00-514-6674	MS35335-34	96906	...WASHER,LOCK 5/16..	EA	1
276	11	XDOZZ	2540-00-431-6522	27010001	70281	...ROLLER DOVETAIL DOOR ASSY..	EA	1
276	12	XBOZZ		0165DC09	70281	...SCREW,SHOULDER DOOR ASSY..	EA	1
276	13	XDOZZ		A134035	70281	...PANEL ASSY INNER..	EA	1
276	14	XBOZZ	5340-00-922-5659	25045006-1	70281	..SCREW MACHINE DOOR LOCK 12-24-1-2..	EA	1
276	15	PAOZZ	5340-00-922-5659	25045006	70281	..LOCK HARDWARE DOOR ASSY..	EA	1
276		AOOZZ		A122913	70281	..DOOR GLASS ASSY DOOR ASSY..	EA	1
276	16	PAOZZ	9340-00-736-8529	30-437	70281	...GLASS,LAMINATED LAMINATED..	EA	1
276	17	PCOZZ	5330-00-191-8741	12199003	70281	...SEAL RUBBER SPE 173 INCH LONG..	FT	1
276	18	XDOZZ		1216P008	72279	...SEAL DOOR GLASS 28-1/2 INCH LONG..	EA	1
276	19	PCOZZ	2540-00-423-0616	122913	70281	...CHANNEL LIFT LEFT FRONT WINDOW..	EA	1
276	20	XDOZZ		6X1-4	70281	...SCREW SHEET MTL WINDOW CHANNEL MTG..	EA	12
276	21	PCOZZ	2540-00-471-0233	2531VC42	70281	...CHANNEL,LIFT 105 INCH LONG..	EA	1
276	22	XBOZZ		1-4X1-2	70281	...SCREW MACHINE 1/4-20X1/2..	EA	5
276	23	XDOZZ		IA287H	70281	...HANDLE DOOR DOOR ASSY..	EA	1
276	24	PAOZZ	5340-00-197-8164	2502H139	70281	...ESCUTCHEON DOOR HANDLE..	EA	1
276	25	PAOZZ	2540-00-910-8932	85-22	27182	...WINDOW,REGULATE REGULATOR..	EA	1
276	26	PAOZZ	2540-00-227-9527	4C335	18882	...REGULATOR VEHICLE WINDOW..	EA	1
276	27	XBOZZ		6X1-4	70281	...SCREW SHT MTL ANTI-RATTLE..	EA	3
276	28	PCOZZ	5680-00-471-0234	2532V008	70281	...STRIP ANTI RATTLE 29 LONG..	EA	1
276	29	XDOZZ		A134034	70281	...DOOR INNER WELDMENT..	EA	1
276	30	XDOZZ		A134030	70281	...PANEL ASSY OUTER..	EA	1
276	31	XBOZZ	5680-00-471-0234	2532VC08	70281	...STRIP ANTI RATTLE 28-7/8..	EA	1
276	32	XBOZZ		6X1-4	70281	...SCREW METAL FLAT HEAD 6X1/4..	EA	3
276	33	XDOZZ		A134029	70281	...DOOR OUTER OUTER DOOR ASSY..	EA	1
276		PBOFZ	3810-00-471-0235	A14C706	70281	..UPPER CAB ASSY CAB CARRIER..	EA	1
276	34	PAOZZ	2540-00-227-9530	A1340C8	70281	...GLASS ASSY SLIDING REAR..	EA	1
276	35	PCOZZ	2540-00-105-26C1	2531V024	70281	....SEAL CLR GLASS GLASS ASSY-21-7/8..	EA	1

(1) ILLUSTRATION (a) FIG NO.	(b) ITEM NO.	(2) SMR CODE	(3) NATIONAL STOCK NUMBER	(4) PART NUMBER	(5) FSCM	(6) DESCRIPTION USABLE ON CODE	(7) U/M	(8) QTY INC IN UNIT
276	36	XBOZZ		2502JC17	70281	....PULL GLASS ASSY	EA	1
276	37	PCOZZ	3930-00-134-9290	1216RC04	70281	....EVERSEAL GLASS ASSY	EA	1
276	38	XDOZZ		30-586	70281	....GLASS GLASS ASSY	EA	
276	39	PCOZZ	2540-00-423-0604	2530VC07	70281	....CHANNEL,SLIDING SLIDING GLASS-22-1/2	FT	1
276	40	PCOZZ	2540-00-471-0239	134108	70281	....CHANNEL 39-7/8 LG	EA	1
276	41	PCOZZ	5330-00-471-0240	2533PC01	70281	....STRIP PLASTIC 39-7/8	FT	1
276		PBOZZ	2540-00-227-9531	A134107	70281	...GLASS ASSY SLIDING FRONT	EA	1
276	42	PAOZZ	2540-00-007-2349	30-587	70281	...WINDOW,SLIDING FRONT	EA	1
276	43	XDOZZ		2502JC17	70281	...PULL GLASS SLIDING	EA	1
276	44	PCOZZ	3930-00-134-9290	1216R004	70281	...SEAL RUBBER SLIDING GLASS FRONT	EA	1
276	45	PCOZZ	2540-00-471-0238	134109	70281	...CHANNEL 23-3/8	EA	1
276	46	PAOZZ	2590-00-120-4818	A134004	70281	..WIPE ASSY DEFROSTER	EA	1
276	47	PAOZZ	2590-00-227-9533	A134003	70281	..LEAD,ELECTRICAL DOME LIGHT	EA	1
276	48	XDOZZ		31-115	14917	..FELT ANTI RATTLE CAB	EA	1
276	49	PAOZZ	5320-01-028-8859	1-8X3-8	70281	..RIVET SOLID WINDOW LATCH	EA	4
276	50	PAOZZ	2540-00-471-0236	1503JC10	70281	..LATCH WINDOW CAB	EA	2
276	51	XBOZZ		30-589	70281	..GLASS,REAR UPPER CAB	EA	1
276	52	PCOZZ	5680-00-983-6721	1205F001	70281	..WEATHER,STRIP REAR WINDOW	EA	1
276	53	PCOZZ	5680-00-983-6711	1203F001	70281	..WEATHER STRIP REAR GLASS 107 LG	FT	1
276	54	XBOZZ		12-1-2	70281	..SCREW CLIP MTG 1/2	EA	5
276	55	XBOZZ	5340-01-038-9481	CCVC509	70281	..CLAMP,LOOP SIDE WINDOW	EA	5
276	56	XDOZZ	2540-00-471-0241	134085	70281	..ROOF HEADLINER CAB	EA	1
276		PAOZZ	6220-00-337-7463	MS51073-1	96906	..DOME LIGHT ASSY CAB	EA	1
276	57	XBOZZ		MS90726-8	70281	...SCREW CAP HX HD DOME LIGHT MTG 1-4-20-1	EA	4
276	58	PAOZZ	5310-00-889-2528	MS45904-68	96906	...WASHER LOCK 1-4 DOME LIGHT MTG	EA	4
276	59	XBOZZ		134140	70281	...FRAME DOME LIGHT	EA	1
276		XAOZZ		A134105	70281	..HOLDER ASSY ADJUSTABLE	EA	1
276	60	XBOZZ	5305-00-543-4302	MS35265-79	96906	...SCREW MACHINE 1-4-20X1-2 HOLDER ASSY	EA	5
276	61	XDOZZ		A134104	70281	...HOLDER WELDMENT ADJUSTMENT	EA	1
276	62	PAOZZ	2540-00-471-0245	2530VC07X45-5-16	70281	...CHANNEL 45-5-16	EA	1
276		PBOZZ	2540-00-227-9535	A128906	70281	..GLASS ASSY CAB UPPER	EA	1
276	63	PAOZZ	2510-00-231-7338	30-596	70281	...GLASS SIDE CAB	EA	1
276	64	PCOZZ	3930-00-134-9290	1216RC04	70281	...EVERSEAL GLASS ASSY SIDE 22-3-8	EA	[illegible]
276	65	PCOZZ	2540-00-431-6511	A128905	70281	...CHANNEL RIGHT REAR WELDMENT	EA	1
276		PFOZZ	2540-00-423-0532	A128903	70281	...CHANNEL,FRONT VENT ASSY	EA	1
276	66	XDOZZ		128502-1	70281	....RIVET SOLID 3-16X1-2 ARM MTG	EA	1
276	67	PAOZZ	2540-00-471-0243	128903	70281	....ARM SIDE WNDW FRONT CHANNEL ASSY	EA	1
276	68	XDOZZ		A128902	70281	....CHANNEL WLDMNT FRONT	EA	1
276	69	PCOZZ	3930-00-134-9250	1216P004	70281	....EVERSEAL 17-5-8 SIDE WINDOW	EA	1

(1) ILLUSTRATION (a) FIG NO	(b) ITEM NO	(2) SMR CODE	(3) NATIONAL STOCK NUMBER	(4) PART NUMBER	(5) FSCM	(6) DESCRIPTION USABLE ON CODE	(7) U/M	(8) QTY INC IN UNIT
276	70	XDOZZ		10-32X3-8	70281	....SCREW MACHINE 10-32X3-, SPRING MTG..........................	EA	.5
276	71	PCOZZ	9320-01-045-0436	771	87730	....RUBBER STRIP SIDE WINDOW 22-13-16..........................	EA	1
276	72	PCOZZ	5330-00-450-6022	1219RC04	70281	....RUBBER STRIP SIDE WINDOW 34-1-2..........................	EA	1
276	73	XDOZZ		24-33	70281	...SPACER KNOB VENT WINDOW..........................	EA	1
276	74	XDOZZ	5355-00-018-6633	2502P117	78252	...KNOB SIDE WINDOW FLUTED..........................	EA	1
276	75	PAOZZ	2540-00-227-9532	30-59C	70281	...GLASS UPPER WINDSHIELD..........................	EA	1
276	76	PCOZZ	2540-00-574-9161	1205R011	70281	...STRIP WINDSHLD 133-1-2 RUBBER..........................	EA	1
276	77	PCOZZ	5680-00-983-6711	1203R001	70281	..WEATHER STRIP RUBBER 133-1-2 LG..........................	EA	1
276	78	XDOZZ	5310-01-027-3102	0301G016	70281	..WASHER,RECESSED GLASS UPPER WINDSHIELD..........................	EA	16
276	79	XDOZZ	5305-00-269-0770	MS51862-56C	96906	..SCREW,TAPPING,THREA UPPER WINDSHIELD..........................	EA	16
276	80	XDOFF	3810-01-040-5550	A140704	70281	..CAB UPPER WELDMENT..........................	EA	1
276		XDOFF	3810-01-026-6515	1014458	70281	.CAB LOWER ASSY CAB CARRIER..........................	EA	1
276	81	PCOZZ	5680-00-983-6711	1203R001	70281	..WEATHER STRIP FRONT GLASS 100..........................	EA	1
276	82	XDOZZ	5680-00-983-6721	1205R001	70281	..STRIP FRT GLASS 100 LG..........................	FT	1
276	83	PAOZZ	3810-00-252-2011	30-588	70281	..GLASS WINDSHIELD CAB LOWER..........................	EA	1
276	84	XBOZZ	5310-00-768-0318	MS51967-14	96906	..NUT,PLAIN,HEXAGON 1-2-13 GRAB HANDLE MTG..........................	EA	2
276	85	XDOZZ	5310-00-809-4061	MS27183-15	96906	..WASHER,FLAT 7-16 GRAB HANDLE MTG..........................	EA	2
276	86	PAOZZ	5310-00-584-5272	MS35338-48	96906	..WASHER,LOCK 1-2 GRAB HANDLE MTG..........................	EA	2
276	87	XDOZZ	2540-00-471-0248	21-90	70281	..HANDLE GRAB CAB LOWER..........................	EA	1
276	88	XDOZZ	5305-00-988-1727	MS35206-263	96906	..SCREW,MACHINE DOOR STRIKER 1-4-20X1..........................	EA	2
276	89	PAOZZ	5310-00-582-5965	MS35338-44	96906	..WASHER,LOCK DOOR STRIKER 1-4..........................	EA	2
276	90	XDOZZ	5310-00-505-0763	MS51967-3	96906	..NUT,PLAIN,HEXAGON DOOR STRIKER 1-4-20..........................	EA	2
276	91	PAOZZ	5340-01-028-0538	25C50C05	70281	..STRIKE,CATCH CAB LOWER..........................	EA	1
276	92	XDOZZ		136C35	70281	..TUBE ASSY VENTILATOR..........................	EA	1
276	93	XDOZZ		09015077	70281	..SPRING COMP SPOTLIGHT MTG..........................	EA	1
276	94	XDOZZ	5305-00-584-5652	MS35206-312	96906	..SCREW MACHINE DOVETAIL MTG 3-8-16X1-1-4..........................	EA	2
276	95	PAOZZ	5310-00-637-9541	MS35338-46	96906	..WASHER,LOCK DOVETAIL MTG 3-8..........................	EA	2
276	96	XDOZZ	5310-00-761-6654	MS51967-9	96906	..NUT,PLAIN,HEXAGON DOVETAIL 3-8-16..........................	EA	2
276	97	PAOZZ	5340-01-028-0032	15C6JC03	70281	..STRIKE,CATCH CAB LOWER..........................	EA	1
276	98	XDOZZ	5310-00-823-8804	MS27183-5	96906	..WASHER,FLAT SPOTLIGHT MTG 1-4..........................	EA	1
276	99	XDOZZ		28-578	70281	..PIN SPRING SPOTLIGHT MTG..........................	EA	1
276	100	PAOZZ	5315-00-187-9538	MS24665-349	96906	..PIN,COTTER SPOTLIGHT MTG 3-32X1-2..........................	EA	1
276		PAOZZ	5340-00-071-0216	19020012	70281	..LATCH,RIM UPPER CAB HOLD-DOWN..........................	EA	4
276	101	XAOZZ		19020012-1	70281	...HANDLE FASTENER..........................	EA	1
276	102	XAOZZ		19020012-2	70281	...BASE FASTENER..........................	EA	1
276	103	XDOZZ		19020012-3	70281	...PIN COTTER FASTENER..........................	EA	1
276	104	XDOZZ		19020012-4	70281	...WASHER FLAT FASTENER..........................	EA	1
276	105	XDOZZ		19020012-5	70281	...PIN CLEVIS FASTENER..........................	EA	1
276	106	XDOZZ		19020012-6	70281	...HOOK DRAW FASTENER..........................	EA	1
276	107	PAOZZ	5330-00-470-8147	134C45	70281	..GASKET VENT DOOR..........................	EA	1

(1) ILLUSTRATION		(2)	(3)	(4)	(5)	(6)	(7)	(8)
(a) FIG NO.	(b) ITEM NO.	SMR CODE	NATIONAL STOCK NUMBER	PART NUMBER	FSCM	DESCRIPTION USABLE ON CODE	U/M	QTY INC IN UNIT
276	108	PCOZZ	5330-00-460-4643	134C46	70281	..GASKET CAB LOWER...	EA	1
276	109	XDOFF	3810-01-026-7084	1014459	70281	..CAB LOWER WELDMENT.......................................	EA	1

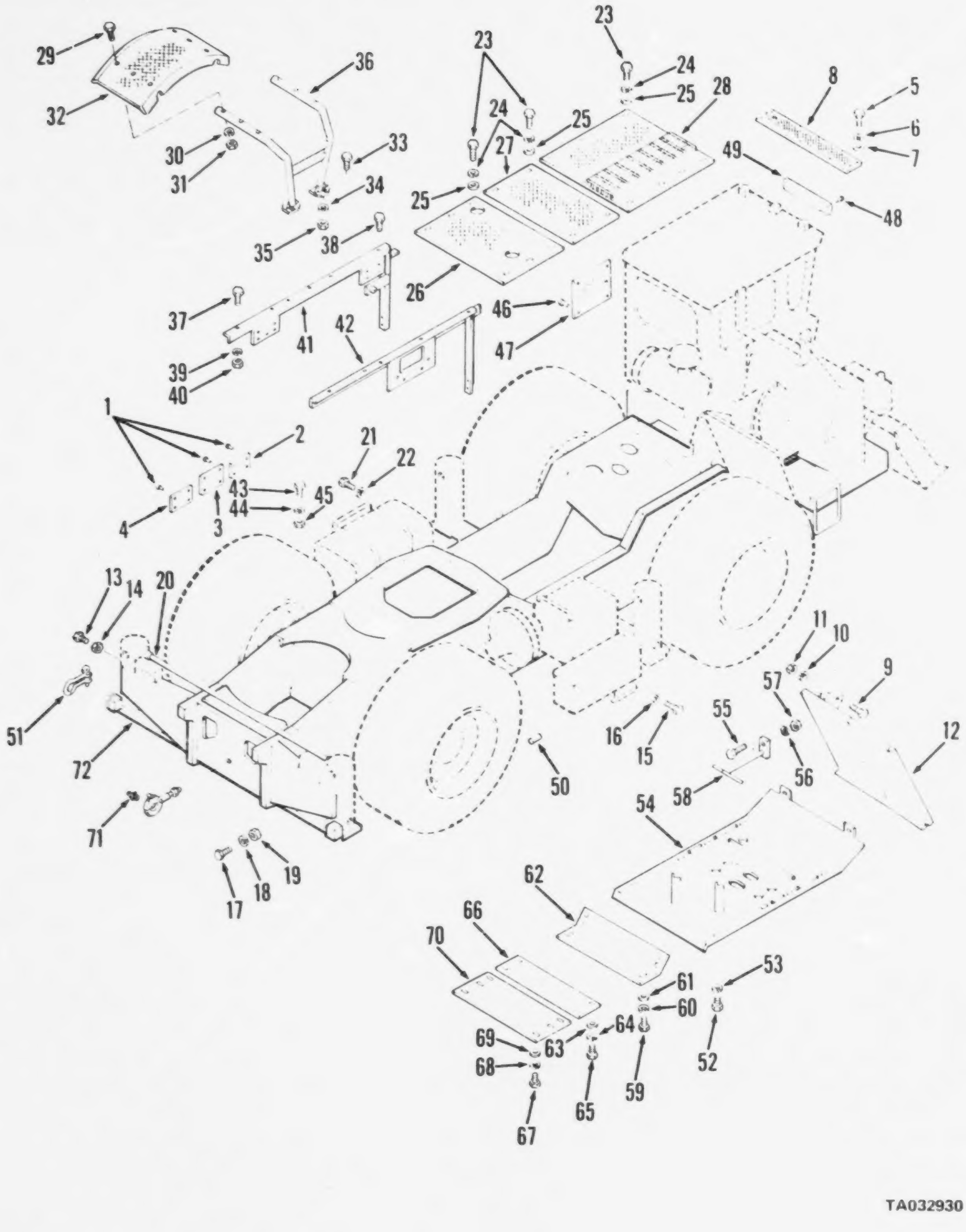

Figure 277. Frame and related parts

(1) ILLUSTRATION (a) FIG NO.	(b) ITEM NO.	(2) SMR CODE	(3) NATIONAL STOCK NUMBER	(4) PART NUMBER	(5) FSCM	(6) DESCRIPTION USABLE ON CODE	(7) U/M	(8) QTY INC IN UNIT
						FUNCTIONAL GROUP 73 FRAME,CARRIER AND RELATED PARTS		
277	1	XBOZZ	5305-00-175-3230	MS21318-14	96906	.SCREW,DRIVE NO 2-8X3-16 INST PLATE MTG......................	EA	12
277	2	XBOZZ		320436	27315	.PLATE INSTRUCTION SLING ATTACHMENT INFO..................	EA	1
277	3	XBOZZ		320432	27315	.PLATE DATA TRANSPORTATION................................	EA	1
277	4	XBOZZ		320441	27315	.PLATE INFORMATION CG-WT INFORMATION......................	EA	1
277	5	XBOZZ	5305-00-269-3209	MS90725-58	96906	.SCREW,CAP,HEXAGON 3-16X3-4 COVER PLATEMTGG...............	EA	6
277	6	XBOZZ	5310-00-087-7493	MS27183-13	96906	.WASHER LOCK 3-8 COVER PLATE MTG..........................	EA	6
277	7	PAOZZ	5310-00-637-9541	MS35338-46	96906	.WASHER,FLAT 3-8 COVER PLATE MTG..........................	EA	6
277	9	XDOZZ		814P24	27315	.PLATE COVER RADIATOR COVER...............................	EA	1
277	16	PAOZZ	5310-00-820-6653	MS35338-50	96906	.WASHER,LOCK SPRING,5-8 HYD TANK MTG......................	EA	4
277	18	PAOZZ	5310-00-584-5272	MS35338-48	96906	.WASHER,LOCK 1-2 STL PIPE MTG.............................	EA	2
277	19	XDOZZ		MS21044-12	96906	.NUT,SELF LOCKING 3-4-16 STL PIPE MTG.....................	EA	2
277	20	XDOZZ	4710-01-044-5212	18T1116701	27315	.SPACER,SLEEVE 1-4X97-1-2 IN LG...........................	EA	1
277	23	XBOZZ	5305-00-942-2196	MS18154-60	96906	.SCREW,CAP HEXAGON 3-8-16X1 DECK PLATE MTG................	EA	18
277	24	PAOZZ	5310-00-637-9541	MS35338-46	96906	.WASHER,LOCK 3-8 DECK PLATE MTG...........................	EA	18
277	25	XBOZZ	5310-00-087-7493	MS27183-13	96906	.WASHER FLAT 3-8 DECK PLATE MTG...........................	EA	18
277	26	XDOZZ		818P174	27315	.PLATE DECK CARRIER.......................................	EA	1
277	27	XDOZZ		818P175	27315	.PLATE DECK CARRIER.......................................	EA	1
277	29	XDOZZ		818P188	27315	.PLATE DECK CARRIER.......................................	EA	1
277	42	XDOZZ		816N257	27315	.SUPPORT DECK RIGHT CARRIER...............................	EA	1
277	43	XBOZZ	5305-00-782-9455	MS90725-111	96906	.SCREW CAP HEXAGON 1-2-13X1-1-4 BATTERY...................	EA	4
277	44	PAOZZ	5310-00-584-5272	MS35338-48	96906	.WASHER,LOCK 1-2 BATTERY MTG..............................	EA	4
277	45	XBOZZ	5310-00-768-0318	MS51967-14	96906	.NUT PLAIN HEXAGON 1-2-13 BATTERY MTG.....................	EA	4
277	46	XBOZZ	5305-00-253-5614	MS21318-20	96906	.SCREW DRIVE ROUND NO 4-7X3-16 LUB PLATE..................	EA	4
277	47	XBOZZ		320571	27315	.PLATE INFORMATION LUBRICATION............................	EA	1
277	48	XBOZZ	5305-00-253-5614	MS21318-20	96906	.SCREW DRIVE ROUND NO 4-7X3-16 WARN PLATE.MTG.............	EA	6
277	49	XBOZZ		320435	27315	.PLATE INFORMATION BOOM CAUTION...........................	EA	1
277	70	XDOZZ		814P29	27315	.GUARD BELLY CARRIER......................................	EA	1
277	71	PAOZZ	4730-00-050-4208	1610BL	95879	.FITTING LUBRICATION 1-8PTFX11-16.........................	EA	1

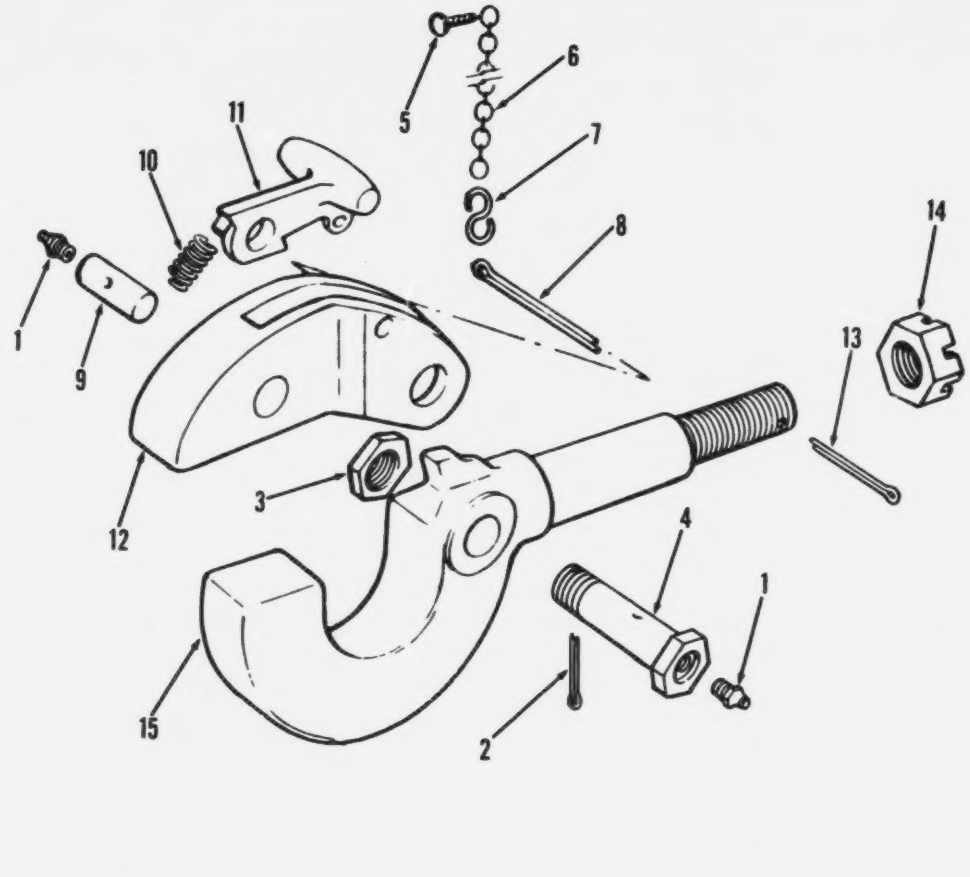

Figure 278. Hook assembly, pintle

(1) ILLUSTRATION (a) FIG NO.	(b) ITEM NO.	(2) SMR CODE	(3) NATIONAL STOCK NUMBER	(4) PART NUMBER	(5) FSCM	(6) DESCRIPTION USABLE ON CODE	(7) U/M	(8) QTY INC IN UNIT
						FUNCTIONAL GROUP 73 FRAME,CARRIER AND RELATED PARTS		
278		XBOZZ		7714878	19207	.HOOK PINTLE CARRIER...	EA	1
278	1	XDOZZ	4730-00-050-4203	MS15001-1	96906	..FITTING,LUBRICATION PINTLE HOOK..........................	EA	2
278	2	XDOZZ	5315-00-298-1499	MS24665-360	96906	..PIN,COTTER LATCH BOLT..	EA	1
278	3	XBOZZ	5310-00-050-3520	5005864	19207	..NUT,PLAIN,SLOTTED LATCH BOLT...............................	EA	1
278	4	XBOZZ		86688096	00000	..BOLT LATCH PINTLE HOOK..	EA	1
278	5	XBOZZ	5305-00-214-3275	220531	21450	..SCREW,DRIVE CHAIN MTG..	EA	1
278	6	XDOZZ		42C15120-205	00000	..CHAIN PINTLE LATCH...	EA	1
278	7	XDOZZ	4030-00-350-8968	506882	19207	..HOOK,CHAIN,S PINTLE HOOK......................................	EA	1
278	8	XDOZZ	5315-00-234-1848	590219	C0000	..PIN,COTTER PINTLE..	EA	1
278	9	XBOZZ	5315-00-693-0634	7714891	19207	..PIN,STRAIGHT TOWING PINTLE...................................	EA	1
278	10	PAOZZ	5360-00-704-4253	7044253	19207	..SPRING,HELICAL LATCH..	EA	1
278	11	XBOZZ	2540-00-237-3693	771488C	19207	..LATCH,PINTLE HOOK PINTLE.......................................	EA	1
278	12	XBOZZ	5340-00-704-9603	7049603	19207	..LOCK LATCH PINTLE HOOK...	EA	1
278	13	XDOZZ	5315-00-187-9591	MS26465-689	96906	..PIN COTTER PINTLE HOOK MTG...................................	EA	1
278	14	XBOZZ	5310-00-771-4911	7714911	19207	..NUT,PLAIN,SLOTTED PINTLE MTG.................................	EA	1
278	15	XBOZZ	2540-00-262-7575	7764906	19207	..HOOK,PINTLE CARRIER..	EA	1

STOCK NUMBER	FIGURE NO.	ITEM NO.	STOCK NUMBER	FIGURE NO.	ITEM NO.
5310-00-004-5033	19	74	5310-00-038-9863	34	12
5310-00-004-5033	21	19	2590-00-040-2187	35	15
5310-00-004-5033	21	41	6680-00-041-3658	188	2
5310-00-004-5033	178	70	4730-00-042-6318	224	11
2990-00-005-5027	49	33	4730-00-042-6318	224	17
5330-00-006-8380	166	2	4730-00-042-6318	224	33
5330-00-006-8380	166	11	4730-00-042-6318	243	17
2540-00-007-2349	276	42	5305-00-042-6417	11	5
5310-00-007-3018	270	14	5305-00-042-6417	178	18
5310-00-007-6159	270	16	5305-00-044-4153	113	64
5330-00-007-6360	57	1	4730-00-044-4577	127	34
5310-00-010-3092	45	6	4730-00-044-4577	128	1
4730-00-011-3175	57	7	4730-00-044-4583	127	39
4730-00-011-6488	140	25	4730-00-044-4583	128	18
4730-00-011-8539	132	39	4730-00-044-4688	42	10
4730-00-011-8539	140	5	4730-00-044-4715	243	18
4730-00-011-8539	147		4730-00-044-4715	251	2
4730-00-011-8539	147	15	6240-00-044-6914	116	6
4730-00-011-8539	147	22	5310-00-045-1015	219	10
4730-00-011-8539	147	31	5305-00-045-1988	182	172
4730-00-011-8539	147	34	5310-00-045-3296	13	2
4730-00-011-8539	156		5310-00-045-3296	13	11
4730-00-011-8539	156	19	5310-00-045-3296	19	45
4730-00-011-8539	156	29	5310-00-045-3296	19	57
5315-00-013-7228	91	11	5310-00-045-3296	35	5
5315-00-013-7303	11	24	5310-00-045-3296	36	5
4730-00-013-7397	82	35	5310-00-045-3296	36	29
4730-00-013-7397	89	28	5310-00-045-3296	37	10
4730-00-013-7397	97	36	5310-00-045-3296	37	21
4730-00-013-7398	82		5310-00-045-3296	88	31
4730-00-013-7398	82		5310-00-045-3296	111	26
4730-00-013-7398	82		5310-00-045-3296	111	34
4730-00-013-7398	82		5310-00-045-3296	111	96
4730-00-013-7398	82		5310-00-045-3296	113	28
4730-00-013-7398	82		5310-00-045-3296	113	51
4730-00-013-7398	82		5310-00-045-3296	113	54
4730-00-013-7398	82		5310-00-045-3296	120	9
4730-00-013-7398	82	18	5310-00-045-3296	121	6
4730-00-013-7398	82	33	5310-00-045-3296	122	6
4730-00-013-7398	94	42	5310-00-045-3296	147	7
5310-00-014-5850	38	21	5310-00-045-3296	149	25
2540-00-014-7024	276	7	5310-00-045-3296	149	49
4730-00-014-7863	145	8	5310-00-045-3296	156	32
4730-00-015-2273	207	9	5310-00-045-3296	158	7
5305-00-018-0150	43	1	5310-00-045-3296	158	50
5355-00-018-6633	276	74	5310-00-045-3296	160	42
5305-00-018-7069	64	6	5310-00-045-3296	171	20
5315-00-018-7988	86	9	5310-00-045-3296	174	33
5315-00-018-7988	87	19	5310-00-045-3296	177	42
4730-00-018-9566	86	32	5310-00-045-3296	178	49
4730-00-018-9566	87	28	5310-00-045-3296	182	43
4730-00-018-9566	94	46	5310-00-045-3296	182	74
4730-00-018-9566	221	26	5310-00-045-3296	182	103
4730-00-018-9566	224	18	5310-00-045-3296	193	4
4730-00-018-9566	224	31	5310-00-045-3296	193	14
4730-00-018-9566	230	8	5310-00-045-3296	268	86
4730-00-018-9566	244	13	5310-00-045-3296	268	91
5315-00-019-0777	17	23	5310-00-045-3296	268	96
5315-00-019-0777	17	55	5310-00-045-3296	268	105
5315-00-019-0777	19	16	5310-00-045-3296	268	107
5315-00-019-0777	19	51	5310-00-045-3299	8	7
5315-00-019-0777	21	6	5310-00-045-3299	37	6
5315-00-019-0777	21	23	5310-00-045-3299	45	5
6240-00-019-0877	38	30	5310-00-045-3299	88	45
6240-00-019-0877	113	35	5310-00-045-3299	111	56
6240-00-019-0877	113	41	5310-00-045-3299	111	137
6240-00-019-0877	114	4	5310-00-045-3299	113	45
6240-00-019-0877	116	5	5310-00-045-3299	268	101
4730-00-019-1456	258	79	5310-00-045-3299	273	10
2940-00-019-4775	58	7	5310-00-045-3299	273	44
2540-00-020-8591	23	36	5310-00-045-4007	8	13
5930-00-021-6314	16	12	5310-00-045-4007	24	14
5925-00-026-4767	273	12	5310-00-045-4007	111	22
4820-00-026-8473	28	3	5310-00-045-4007	111	30
5340-00-032-4157	258	97	5310-00-045-4007	111	93
5340-00-032-4157	260	97	5310-00-045-4007	111	114
2530-00-034-4188	175	2	5310-00-045-4007	111	144
2530-00-034-4188	179	4	5310-00-045-4007	111	187
5935-00-034-8009	15	5	5310-00-045-4007	111	215
5935-00-034-8009	271	5	5310-00-045-5001	120	13
			5310-00-045-5001	121	20

STOCK NUMBER	FIGURE NO.	ITEM NO.
5310-00-045-5001	122	20
4730-00-048-1788	109	7
5305-00-050-1076	184	1
5305-00-050-1077	168	34
5340-00-050-2740	111	35
5340-00-050-2740	152	5
5340-00-050-2740	152	6
5340-00-050-2740	156	5
5310-00-050-3520	278	3
4730-00-050-4203	39	8
4730-00-050-4203	278	1
4730-00-050-4208	2	3
4730-00-050-4208	9	29
4730-00-050-4208	9	41
4730-00-050-4208	11	19
4730-00-050-4208	85	
4730-00-050-4208	85	
4730-00-050-4208	85	3
4730-00-050-4208	87	13
4730-00-050-4208	89	24
4730-00-050-4208	92	1
4730-00-050-4208	92	23
4730-00-050-4208	94	1
4730-00-050-4208	94	20
4730-00-050-4208	97	33
4730-00-050-4208	98	21
4730-00-050-4208	99	1
4730-00-050-4208	104	27
4730-00-050-4208	107	4
4730-00-050-4208	108	1
4730-00-050-4208	118	43
4730-00-050-4208	126	24
4730-00-050-4208	126	28
4730-00-050-4208	196	5
4730-00-050-4208	197	21
4730-00-050-4208	277	71
5305-00-050-9229	13	3
5305-00-050-9229	13	10
5305-00-051-4076	25	10
5306-00-051-4081	254	30
2520-00-051-9932	200	1
2520-00-051-9932	207	67
6230-00-052-0700	15	
5310-00-052-6454	118	2
5310-00-052-6454	120	17
5310-00-052-6454	121	24
5310-00-052-6454	122	24
5305-00-052-6875	271	1
2910-00-053-0500	30	10
5305-00-053-1117	268	130
4730-00-054-7296	178	5
5305-00-054-9277	86	7
5305-00-054-9277	87	1
2940-00-055-0832	60	9
5360-00-055-2657	68	15
2930-00-055-2668	63	3
5310-00-056-3395	15	28
5340-00-057-2904	158	5
5340-00-057-2904	158	48
5340-00-057-2904	160	44
5340-00-057-2904	171	22
5340-00-057-2904	174	34
5340-00-057-2904	177	44
5340-00-057-2904	178	50
5930-00-058-1576	132	51
5315-00-059-0217	11	3
5315-00-059-0238	103	4
5325-00-060-0976	113	6
5325-00-060-0976	113	52
5325-00-060-0976	268	77
5310-00-060-9435	156	54
5310-00-061-1258	43	9
5310-00-061-1258	43	12
5310-00-067-6357	268	48
5310-00-067-6357	268	59
5310-00-067-6357	268	68
5310-00-067-6357	268	111
5310-00-067-6357	268	126
5310-00-067-6357	268	139
5305-00-068-0498	185	1
5305-00-068-0498	195	16
5305-00-068-0499	149	36

STOCK NUMBER	FIGURE NO.	ITEM NO.
5305-00-068-0501	30	1
5305-00-068-0501	35	8
5305-00-068-0501	268	6
5305-00-068-0501	268	9
5305-00-068-0501	268	14
5305-00-068-0501	268	23
5305-00-068-0501	268	49
5305-00-068-0501	268	58
5305-00-068-0501	268	112
5305-00-068-0501	268	138
5305-00-068-0511	43	7
5310-00-068-5285	37	18
5305-00-069-5571	32	41
5305-00-069-5573	191	38
5305-00-069-5576	168	32
4820-00-069-9107	166	9
4820-00-069-9107	166	17
4820-00-069-9129	166	4
4820-00-069-9129	166	13
5340-00-071-0216	276	
5305-00-071-1765	111	190
5305-00-071-1766	184	16
5305-00-071-1767	45	12
5305-00-071-1769	113	65
5305-00-071-1770	90	34
5305-00-071-1770	93	34
5305-00-071-1772	88	25
5305-00-071-1772	88	37
5305-00-071-1782	2	6
5305-00-071-2232	140	21
5305-00-071-2234	163	54
5305-00-071-2234	267	54
5305-00-071-2235	111	122
5305-00-071-2235	113	73
5305-00-071-2236	267	58
5305-00-071-2238	113	10
5305-00-071-2238	268	26
5305-00-071-2238	268	69
5305-00-071-2238	268	127
5305-00-071-2239	147	17
5305-00-071-2241	152	17
5305-00-071-2241	156	21
5305-00-071-2242	174	68
5305-00-071-2511	163	37
5305-00-071-2514	149	16
5365-00-072-6729	260	59
2540-00-073-9846	131	4
2540-00-073-9849	131	5
4730-00-074-0713	171	7
4730-00-074-0713	171	12
4730-00-074-0713	254	26
4730-00-074-0713	254	41
2815-00-074-1929	67	1
2940-00-074-8869	251	7
2920-00-076-9432	44	5
5340-00-079-7837	156	35
4720-00-080-3085	160	
5340-00-080-4165	229	11
4730-00-080-7023	32	25
2910-00-080-7294	47	6
5310-00-080-8495	112	4
5310-00-080-9786	268	38
5310-00-081-4219	23	40
5310-00-081-4219	23	49
3110-00-081-8742	166	7
5305-00-082-6721	82	1
5305-00-082-6721	82	21
5305-00-082-6721	91	2
5305-00-082-6977	120	16
5305-00-082-6977	121	23
5305-00-082-6977	122	23
5307-00-085-4125	57	2
3815-00-085-4470	30	7
6220-00-086-4894	113	
5310-00-087-4652	19	34
5310-00-087-4652	19	80
5310-00-087-7493	20	35
5310-00-087-7493	103	3
5310-00-087-7493	109	2

STOCK NUMBER	FIGURE NO.	ITEM NO.
5310-00-087-7493	117	5
5310-00-087-7493	117	11
5310-00-087-7493	163	47
5310-00-087-7493	199	21
5310-00-087-7493	268	123
5310-00-087-7493	268	128
5310-00-087-7493	268	141
5310-00-087-7493	277	6
5310-00-087-7493	277	25
4720-00-087-9122	191	56
5310-00-088-0553	267	3
5340-00-088-1254	140	29
5340-00-088-1255	185	24
5325-00-088-6147	115	4
4730-00-088-8665	189	28
5305-00-088-9044	12	23
5365-00-090-5426	111	53
5305-00-091-4006	253	3
5305-00-091-4012	229	1
2530-00-096-5631	32	6
2540-00-105-2601	276	35
5930-00-105-5474	15	17
5930-00-105-5474	271	17
4820-00-106-0396	180	6
3110-00-108-8004	85	2
3110-00-108-8004	87	23
5305-00-109-0282	15	21
5305-00-109-0282	271	21
2930-00-112-0437	64	10
5330-00-113-8486	146	7
5935-00-115-2306	111	72
5935-00-115-2307	111	200
6620-00-115-9042	273	25
5305-00-115-9526	35	17
6220-00-116-3609	111	13
6220-00-116-3609	111	19
6220-00-116-3609	111	43
6220-00-116-3609	111	65
6220-00-116-7230	121	12
6220-00-116-7230	122	12
4730-00-116-9323	89	23
3930-00-116-9721	194	12
4730-00-117-3958	158	47
4730-00-117-9148	131	3
5310-00-118-3034	31	19
5306-00-118-5046	42	1
4730-00-118-5174	40	18
2530-00-118-8589	157	
5340-00-119-2065	12	18
5306-00-119-4755	148	16
5330-00-119-4842	34	9
5330-00-119-4842	193	16
5305-00-119-4880	148	24
3815-00-120-4804	9	50
3815-00-120-4805	9	40
2590-00-120-4818	276	46
4730-00-120-4834	251	19
2910-00-120-4854	267	14
5305-00-121-2705	34	8
5310-00-121-8217	148	17
4730-00-125-2685	174	17
4730-00-125-2685	254	44
4730-00-125-7921	174	15
4730-00-125-7921	177	38
4030-00-126-4315	11	26
5306-00-127-7239	118	1
2815-00-131-1700	251	
2815-00-131-5586	58	20
2520-00-132-3158	187	6
2530-00-133-9971	142	
3930-00-134-9290	276	37
3930-00-134-9290	276	44
3930-00-134-9290	276	64
3930-00-134-9290	276	69
5310-00-136-5712	58	10
5935-00-137-4671	111	47
2540-00-140-9816	12	10
4730-00-142-1278	68	2
4730-00-142-1851	229	25
4730-00-142-1851	240	24
4730-00-142-1851	244	12
4730-00-143-3941	163	33
5330-00-143-8463	184	21
4730-00-148-4975	49	7
4730-00-148-4975	64	24
5940-00-150-4473	111	64
5315-00-151-9052	1	2
5360-00-152-0332	148	26
5360-00-152-0334	148	29
4730-00-152-6073	64	9
4730-00-152-6233	66	4
5355-00-152-8353	85	
5355-00-152-8353	85	5
5355-00-152-8353	37	12
6240-00-155-7790	14	7
6240-00-155-7807	13	5
6240-00-155-7848	7	34
6240-00-155-8714	38	5
4730-00-158-0868	40	44
4730-00-163-4645	258	96
4730-00-163-4645	260	96
4730-00-164-1923	228	20
2815-00-164-6421	49	12
5310-00-167-0721	269	2
5310-00-167-0839	42	6
5935-00-167-7775	111	12
5935-00-167-7775	111	20
5935-00-167-7775	111	42
5935-00-167-7775	111	62
5935-00-167-7775	111	77
5935-00-167-7775	111	81
5935-00-167-7775	111	197
5935-00-167-7775	111	208
5935-00-167-7775	111	210
5935-00-167-7775	111	212
5935-00-167-7775	111	218
5935-00-167-7775	111	220
5935-00-167-7775	271	6
5935-00-167-7775	273	16
5935-00-167-7775	273	20
4720-00-169-5112	192	
4730-00-172-0022	98	7
4730-00-172-0028	101	9
4730-00-172-0034	11	12
4730-00-172-0034	40	41
4730-00-172-0049	254	63
4730-00-173-1881	158	32
4730-00-173-1881	160	25
4730-00-173-1881	171	10
4730-00-173-1881	174	26
4820-00-174-0315	82	9
5325-00-174-9322	111	135
5305-00-175-3230	186	21
5305-00-175-3230	277	1
5310-00-175-5031	252	17
2910-00-175-9250	48	
4820-00-176-9688	173	
5330-00-179-1186	154	17
5330-00-179-6206	157	28
5330-00-179-6207	157	21
5330-00-179-6208	157	22
5330-00-179-6209	157	20
5340-00-182-3726	115	11
4820-00-182-9089	181	
4820-00-182-9090	192	10
5935-00-184-6707	111	82
5325-00-185-0001	111	134
4730-00-187-0839	163	42
4730-00-187-0840	182	46
4730-00-187-0840	182	48
4730-00-187-0840	182	59
4730-00-187-0840	182	93
4730-00-187-0840	182	107
4730-00-187-0840	182	121
4730-00-187-0846	182	152
4730-00-187-4207	49	22
4730-00-187-4207	58	19
5315-00-187-9538	8	4
5315-00-187-9538	276	100
5315-00-187-9550	90	6
5315-00-187-9550	102	8
5315-00-187-9588	86	8

STOCK NUMBER	FIGURE NO.	ITEM NO.
5315-00-187-9588	87	3
5315-00-187-9589	109	16
5315-00-187-9591	278	13
4730-00-188-8012	182	24
5330-00-191-8741	276	17
4730-00-193-2709	145	7
4730-00-193-2709	145	48
4730-00-193-2715	156	28
5315-00-193-6402	11	4
5310-00-193-9753	68	3
4730-00-194-0216	192	7
4730-00-194-0216	192	14
4730-00-194-1115	171	31
4730-00-194-1115	177	6
4730-00-194-1115	177	27
4730-00-194-1116	168	10
4730-00-194-1121	182	134
3930-00-195-0571	173	8
5315-00-195-1423	260	104
2530-00-195-5795	148	
4730-00-196-2098	92	4
5310-00-197-4508	274	14
5310-00-197-4508	275	14
5340-00-197-8164	276	24
5330-00-198-6190	184	4
5310-00-202-1836	15	23
5310-00-202-1836	271	23
5310-00-202-1862	15	22
5310-00-202-1862	271	22
9905-00-202-3639	113	23
4730-00-202-8970	64	21
4730-00-202-9170	258	1
4730-00-203-0549	89	22
9905-00-205-2795	13	13
9905-00-205-2795	121	18
9905-00-205-2795	122	18
5306-00-207-5736	35	1
5310-00-208-1918	19	37
5310-00-208-1918	24	7
5310-00-208-9250	219	10
5310-00-209-0786	269	6
5310-00-209-0786	269	10
5310-00-209-0965	32	42
5310-00-209-0965	43	3
5310-00-209-0965	84	13
5310-00-209-0965	103	18
5310-00-209-0965	168	33
5310-00-209-0965	182	173
5310-00-209-0965	184	2
5310-00-209-0965	191	39
5310-00-209-0965	193	21
5310-00-209-0965	219	18
5310-00-209-1761	82	52
5310-00-209-1761	86	40
5310-00-209-1761	87	42
5315-00-209-7273	9	4
5305-00-214-3275	278	5
5999-00-215-4048	125	3
4010-00-220-5101	9	3
4730-00-220-5574	160	20
4730-00-221-2140	89	21
5355-00-221-6537	134	4
4730-00-221-8749	40	45
5315-00-222-1587	2	12
4730-00-222-1839	140	38
4730-00-222-1839	149	7
4730-00-222-1839	152	48
4730-00-222-1839	156	26
4730-00-222-1840	136	28
4730-00-222-1840	136	48
2910-00-222-2216	252	15
5306-00-224-1113	65	2
5305-00-225-3838	17	31
5305-00-225-3838	17	63
5305-00-225-3838	19	24
5305-00-225-3838	21	14
5305-00-225-3838	21	31
5305-00-225-3838	111	113
5305-00-225-3839	8	1
5305-00-225-3839	24	17
5305-00-225-3839	111	1
5305-00-225-3839	111	87
5305-00-225-3839	177	23
5305-00-225-3839	182	139
5305-00-225-3839	267	50
5305-00-225-3839	268	30
5305-00-225-3840	140	1
5305-00-225-3840	140	13
5306-00-225-8494	23	33
5306-00-225-8494	269	1
5306-00-225-8496	84	1
5306-00-225-8496	103	15
5306-00-225-8496	117	14
5306-00-225-8497	147	58
5306-00-225-8497	268	3
5306-00-225-8500	61	3
5306-00-225-8502	23	39
5306-00-225-8502	219	14
5306-00-225-8504	177	32
5306-00-225-8505	161	1
5306-00-225-8506	62	5
5306-00-225-8510	252	20
5306-00-225-8511	160	38
5306-00-225-8512	111	168
5306-00-225-8514	147	36
5305-00-225-9081	7	1
5305-00-225-9081	268	122
5306-00-225-9088	113	3
2530-00-226-1183	254	33
2530-00-226-1242	258	61
2530-00-226-1242	260	61
2530-00-226-1243	258	61
2530-00-226-1243	260	61
5306-00-226-4826	31	9
5306-00-226-4826	63	1
5306-00-226-4826	64	16
5306-00-226-4826	66	1
5306-00-226-4831	219	14
5930-00-226-6429	38	12
5305-00-226-7768	95	8
5305-00-226-7768	96	8
5315-00-226-8358	260	101
2540-00-227-9527	276	26
2540-00-227-9530	276	34
2540-00-227-9531	276	
2540-00-227-9532	276	75
2590-00-227-9533	276	47
2540-00-227-9535	276	
2540-00-227-9539	131	27
4730-00-229-3466	32	9
3020-00-230-0066	66	5
5306-00-230-9846	49	8
4730-00-231-3013	177	4
4730-00-231-3019	182	142
4730-00-231-3940	182	147
4730-00-231-3964	182	164
4730-00-231-4009	182	80
4730-00-231-4009	182	91
4730-00-231-4013	182	78
4730-00-231-4013	182	123
4730-00-231-5632	145	21
4730-00-231-5632	192	18
2510-00-231-7338	276	63
5315-00-232-0841	36	20
4730-00-233-9988	32	16
5315-00-234-1664	91	34
5315-00-234-1848	278	8
5340-00-234-4902	142	7
5330-00-235-4885	66	13
5330-00-235-5714	89	13
3810-00-236-0448	124	
3830-00-236-2275	118	4
5305-00-236-3598	40	59
2540-00-237-3693	278	11
4730-00-239-1135	32	26
4730-00-239-3047	191	60
9905-00-239-4895	268	72
9905-00-239-4896	268	64
5306-00-239-7771	86	5
5315-00-239-8027	267	15
5315-00-239-8027	267	19
5315-00-239-8027	267	22

STOCK NUMBER	FIGURE NO.	ITEM NO.
5315-00-239-8027	267	47
3040-00-240-5379	118	17
3040-00-240-5381	267	65
4710-00-240-5621	184	
6680-00-240-5674	206	5
4710-00-240-9010	126	27
5315-00-241-7330	163	11
5310-00-245-5446	86	34
5310-00-245-5446	87	30
5310-00-246-0197	40	48
4730-00-246-9189	89	19
2590-00-248-3275	111	41
2590-00-248-3276	111	217
2590-00-248-3292	268	65
2590-00-248-3332	111	206
2590-00-248-3333	111	
2590-00-248-3404	111	110
2590-00-248-3407	111	112
2590-00-248-3446	111	111
2590-00-248-3457	111	107
2590-00-248-3463	111	101
2590-00-248-3474	111	104
2590-00-248-3486	111	98
2540-00-250-4390	267	49
5330-00-251-8839	160	21
5330-00-251-8839	174	44
5330-00-251-8839	174	47
5330-00-251-8839	174	49
5330-00-251-8839	178	2
5330-00-251-8839	178	68
3810-00-252-2011	276	83
5310-00-253-1205	44	1
5330-00-253-3335	251	12
4730-00-253-4413	207	68
5305-00-253-5614	268	51
5305-00-253-5614	268	63
5305-00-253-5614	268	79
5305-00-253-5614	268	81
5305-00-253-5614	268	116
5305-00-253-5614	268	118
5305-00-253-5614	268	136
5305-00-253-5614	277	46
5305-00-253-5614	277	48
5360-00-253-7229	125	4
2530-00-254-5562	154	
4730-00-254-6225	132	30
4730-00-254-6225	132	50
4730-00-254-6225	132	52
4730-00-254-6225	136	10
4730-00-254-6225	136	14
4730-00-254-6225	136	47
4730-00-254-6225	156	10
4730-00-254-6225	225	30
4730-00-254-6227	140	8
4730-00-254-6227	145	39
4730-00-254-6227	145	45
4730-00-254-6227	192	3
4730-00-254-6227	192	20
4730-00-254-6228	147	45
4730-00-254-6228	147	72
4730-00-254-6228	152	3
4730-00-254-6228	156	3
4730-00-254-6228	156	42
4730-00-254-6229	147	73
4730-00-255-0560	184	3
4730-00-256-4305	40	52
9905-00-258-1441	182	
9905-00-258-1441	182	
9905-00-258-1441	182	
9905-00-258-1441	182	
5365-00-262-4701	58	13
2540-00-262-7575	278	15
5325-00-263-6651	268	78
4730-00-265-6911	132	42
4730-00-265-6911	147	14
4730-00-265-6911	147	26
4730-00-265-6911	149	34
4730-00-265-6911	152	24
4730-00-265-6911	152	43
4730-00-265-6911	152	53
4730-00-265-6911	152	57
4730-00-265-6911	156	30
4730-00-265-9713	152	31
5310-00-266-0517	8	14
4730-00-266-0532	132	24
4730-00-266-0532	136	6
4730-00-266-0532	136	16
4730-00-266-0532	140	12
4730-00-266-0538	132	31
4730-00-266-0538	132	36
4730-00-266-0538	147	33
4730-00-266-0538	149	19
4730-00-266-0538	152	8
4730-00-266-0538	152	10
4730-00-266-0538	152	59
4730-00-266-0538	156	8
4730-00-266-0543	140	37
4730-00-266-0543	152	29
5305-00-267-8972	49	25
5305-00-267-8972	182	36
5305-00-267-8972	182	52
5305-00-267-8972	182	68
5305-00-267-8972	182	84
5305-00-267-8972	182	97
5305-00-267-8972	182	114
5305-00-267-8972	182	127
5305-00-267-8976	272	3
5305-00-267-8977	132	58
5305-00-269-0770	276	79
5305-00-269-2800	32	4
5305-00-269-2801	82	13
5305-00-269-2802	186	17
5305-00-269-2805	86	20
5305-00-269-2805	87	24
5305-00-269-2805	95	5
5305-00-269-2805	96	5
5305-00-269-2805	117	4
5305-00-269-2805	199	19
5305-00-269-2807	46	1
5305-00-269-2807	117	9
5305-00-269-2808	85	25
5305-00-269-2810	97	39
5305-00-269-2811	95	6
5305-00-269-2811	96	6
5305-00-269-3206	23	19
5305-00-269-3206	103	6
5305-00-269-3208	17	34
5305-00-269-3208	17	45
5305-00-269-3208	21	44
5305-00-269-3208	27	1
5305-00-269-3208	27	8
5305-00-269-3208	273	60
5305-00-269-3209	20	33
5305-00-269-3209	20	40
5305-00-269-3209	31	5
5305-00-269-3209	89	7
5305-00-269-3209	120	1
5305-00-269-3209	268	15
5305-00-269-3209	268	18
5305-00-269-3209	268	56
5305-00-269-3209	268	115
5305-00-269-3209	271	26
5305-00-269-3209	277	5
5305-00-269-3210	17	1
5305-00-269-3210	17	18
5305-00-269-3210	17	40
5305-00-269-3210	17	50
5305-00-269-3210	43	6
5305-00-269-3210	65	9

STOCK NUMBER	FIGURE NO.	ITEM NO.
5305-00-269-3212	19	79
5305-00-269-3213	19	33
5305-00-269-3213	184	9
5305-00-269-3213	221	9
5305-00-269-3213	224	13
5305-00-269-3213	267	9
5305-00-269-3214	17	12
5305-00-269-3214	28	5
5305-00-269-3214	32	35
5305-00-269-3215	156	53
5305-00-269-3215	224	27
5305-00-269-3216	26	15
5305-00-269-3216	49	3
5305-00-269-3216	109	13
5305-00-269-3217	221	1
5305-00-269-3218	97	1
5305-00-269-3219	168	20
5305-00-269-3219	267	36
5305-00-269-3221	224	5
5305-00-269-3221	224	12
5305-00-269-3221	224	21
5305-00-269-3222	178	69
5305-00-269-3224	49	4
5305-00-269-3224	229	9
5305-00-269-3226	158	26
2530-00-270-3879	147	1
2530-00-270-3879	149	1
5325-00-270-8889	111	32
5325-00-270-8889	111	125
5325-00-270-8889	268	74
5305-00-272-3533	37	16
4330-00-274-4712	28	4
4330-00-274-4712	250	2
4320-00-275-4209	66	
5310-00-275-6635	86	38
5310-00-275-6635	87	44
5325-00-276-6343	88	40
5325-00-276-6343	112	9
5325-00-276-6343	268	71
4820-00-276-9041	223	4
4730-00-277-3874	140	28
4730-00-277-3874	140	33
4710-00-277-5525	136	46
4710-00-277-5527	147	22
4710-00-277-5527	156	
4710-00-277-5527	156	
4730-00-277-5553	132	19
4730-00-277-5736	145	47
4730-00-277-8273	52	2
4730-00-277-8273	79	28
4730-00-277-8273	82	37
4730-00-277-8273	97	37
4730-00-277-8274	32	12
4730-00-277-8274	32	18
4730-00-277-8768	82	8
4730-00-277-8768	82	39
4730-00-277-8768	86	13
4730-00-278-0601	182	156
4730-00-278-0601	182	158
4730-00-278-0601	182	171
4730-00-278-3118	168	22
4730-00-278-3208	182	163
4730-00-278-3208	182	170
4730-00-278-3380	258	2
4730-00-278-3380	258	98
4730-00-278-3380	260	2
4730-00-278-3380	260	98
4730-00-278-4603	149	22
4730-00-278-4673	192	6
4730-00-279-0353	270	36
5325-00-281-1557	273	41
5325-00-285-3345	35	23
5325-00-285-3345	111	118
5330-00-285-9842	160	15
5330-00-285-9842	160	37
5330-00-285-9842	160	52
5330-00-285-9842	168	29
5330-00-285-9842	177	3
5330-00-285-9842	177	19
5330-00-285-9842	177	31
5330-00-285-9842	178	8
5330-00-285-9842	178	63
5330-00-285-9847	178	20
4730-00-287-0278	168	12
4730-00-287-1561	145	26
2910-00-287-1912	252	6
2910-00-287-5474	47	
2530-00-287-8252	90	25
2530-00-287-8252	93	25
2530-00-287-8252	95	16
2530-00-287-8252	96	16
2530-00-287-8252	102	20
2530-00-287-8252	103	25
4730-00-288-8257	82	20
4730-00-288-9947	171	35
4730-00-288-9948	178	9
4730-00-288-9948	182	15
4730-00-289-0163	182	167
4730-00-289-1254	32	14
4730-00-289-1254	32	19
4720-00-289-2615	163	
4730-00-289-4770	224	32
4730-00-289-4770	240	26
4730-00-289-4770	244	14
4730-00-289-5176	62	2
4730-00-289-5176	64	8
5330-00-290-1018	83	10
5330-00-290-7860	58	9
5330-00-292-0492	45	14
5310-00-292-5996	34	13
3020-00-294-9682	9	30
5935-00-295-6403	24	20
5935-00-295-6403	111	117
2530-00-296-0855	103	20
5930-00-296-6318	38	7
5930-00-296-6318	273	22
5315-00-297-2444	88	8
5315-00-297-2444	88	12
5330-00-297-7106	116	4
5315-00-298-1481	254	50
5315-00-298-1499	278	2
3030-00-298-6831	43	4
2920-00-299-0700	219	16
6220-00-299-7426	13	7
2590-00-307-8856	273	2
9390-00-307-9644	18	12
2540-00-318-0159	269	11
6625-00-321-6365	38	16
6625-00-321-6365	273	27
4730-00-322-8456	171	
4730-00-322-8456	177	12
4730-00-322-8456	182	19
5340-00-323-1624	32	2
5310-00-325-2456	258	13
5310-00-325-2456	260	13
4330-00-328-5339	187	8
4330-00-328-5339	188	10
4730-00-331-4686	178	52

STOCK NUMBER	FIGURE NO.	ITEM NO.
3805-00-332-5556	55	32
6220-00-337-6471	116	
6210-00-337-7345	274	
6210-00-337-7345	275	
6220-00-337-7463	276	
4730-00-339-0714	30	8
2590-00-340-1409	125	
9390-00-350-8215	19	70
2530-00-350-8646	103	19
4030-00-350-8968	278	7
2920-00-351-9657	111	189
5330-00-353-0959	113	37
5330-00-353-0959	113	43
5305-00-353-0969	115	6
4730-00-353-2995	84	3
4730-00-353-3006	82	36
5305-00-354-1227	49	2
2530-00-359-0241	87	34
4730-00-359-0431	82	53
5310-00-359-0458	82	54
5310-00-359-0458	84	4
2530-00-359-0775	86	24
2530-00-359-0775	86	25
2530-00-359-0775	87	33
4730-00-359-4731	158	57
4730-00-359-4731	171	18
4730-00-359-4731	174	11
4730-00-359-4731	174	30
4730-00-359-4731	177	34
4730-00-359-4731	178	10
4820-00-360-8299	58	6
5306-00-367-7312	53	6
5935-00-368-4857	13	42
6220-00-368-4945	116	10
3120-00-368-6304	36	23
4730-00-371-2142	152	12
4730-00-371-2142	152	14
2590-00-371-3137	125	2
6250-00-371-4018	113	36
6250-00-371-4018	113	42
5999-00-374-0826	125	5
3040-00-374-8850	88	6
2910-00-377-5548	46	10
4730-00-391-3771	145	4
4730-00-391-3771	145	46
5310-00-393-6685	111	52
2520-00-395-7722	89	18
2520-00-395-7722	152	1
2520-00-395-7722	156	1
5340-00-400-3449	229	8
2940-00-400-5189	251	17
4730-00-400-6544	178	21
3810-00-400-7006	118	45
5315-00-400-7610	149	42
6680-00-401-1400	193	15
4730-00-401-1412	152	49
4730-00-401-1412	156	25
9390-00-401-3759	17	8
9390-00-401-3765	18	7
9390-00-401-3765	18	14
9390-00-401-3765	19	72
9390-00-401-3797	18	29
9390-00-401-3848	18	28
4730-00-401-7131	136	27
4730-00-401-7131	145	5
4730-00-401-7132	147	78
4730-00-401-7132	149	12
4730-00-401-7132	149	15
2520-00-401-7136	174	7
2520-00-401-7139	186	13
2530-00-401-8143	142	1
2530-00-401-8203	97	23
2530-00-401-8203	97	28
5340-00-402-5927	35	
2910-00-403-5504	36	
2590-00-403-5519	14	9
3040-00-404-0705	9	34
5305-00-404-1388	224	28
3040-00-404-2982	9	27
5340-00-404-4098	37	3

STOCK NUMBER	FIGURE NO.	ITEM NO.
2910-00-404-7294	34	17
4810-00-404-9819	165	
4730-00-405-7265	89	20
2540-00-405-7516	270	48
2540-00-405-7519	270	45
4730-00-406-6989	82	41
4730-00-406-6990	22	7
5310-00-407-9566	23	34
5310-00-407-9566	23	41
5310-00-407-9566	25	5
5310-00-407-9566	31	10
5310-00-407-9566	60	6
5310-00-407-9566	61	4
5310-00-407-9566	63	2
5310-00-407-9566	64	13
5310-00-407-9566	64	17
5310-00-407-9566	84	2
5310-00-407-9566	103	16
5310-00-407-9566	111	169
5310-00-407-9566	147	37
5310-00-407-9566	147	59
5310-00-407-9566	158	43
5310-00-407-9566	160	39
5310-00-407-9566	161	2
5310-00-407-9566	177	33
5310-00-407-9566	195	2
5310-00-407-9566	219	15
5310-00-407-9566	254	31
5310-00-407-9566	268	2
5310-00-407-9566	268	35
4710-00-409-8844	82	25
4820-00-410-6018	154	2
5340-00-410-6032	138	5
5310-00-411-5248	153	5
5310-00-411-5251	36	8
4820-00-411-5454	149	6
4820-00-411-5457	143	
4820-00-411-8102	146	
4820-00-412-3798	138	2
2920-00-416-4070	63	12
2920-00-416-4070	71	3
3815-00-416-7393	2	2
5305-00-418-2843	43	11
6230-00-419-9803	271	25
4730-00-420-5624	92	5
4730-00-420-5624	94	49
3810-00-420-8070	109	8
5340-00-420-9813	185	
2940-00-421-9655	188	8
2540-00-423-0532	276	
2540-00-423-0604	276	39
2540-00-423-0616	276	19
2520-00-424-4019	60	2
5360-00-425-7889	103	29
3120-00-425-8186	85	
3120-00-425-8186	85	
3120-00-425-8186	85	6
3120-00-425-8186	87	14
5365-00-427-2834	86	36
5365-00-427-2834	87	32
2530-00-427-3397	147	51
5305-00-429-1115	15	13
5305-00-429-1115	271	13
2540-00-431-6511	276	65
2540-00-431-6522	276	11
5310-00-431-8874	43	8
5305-00-432-4163	121	11
5305-00-432-4163	122	11
5305-00-432-4201	132	2
5305-00-432-4201	132	37
5305-00-432-4202	268	10
5961-00-433-1607	273	14
5961-00-433-1607	273	18
3120-00-435-1160	270	10
5325-00-435-2168		
5325-00-435-2168	18	41
5325-00-435-2168	20	30
5325-00-435-2168	89	5
5325-00-435-2168	109	21
5325-00-435-2168	109	25

STOCK NUMBER	FIGURE NO.	ITEM NO.
5325-00-435-2168	109	34
3810-00-435-4508	82	38
3810-00-435-4508	83	
4820-00-435-7577	151	
4730-00-435-8015	254	45
3120-00-435-8630	102	7
4820-00-436-3032	153	
3810-00-436-3156	84	
3810-00-436-3157	90	19
3810-00-436-3157	91	19
3810-00-436-3157	93	19
3810-00-436-3157	95	10
3810-00-436-3157	96	10
3810-00-436-3157	102	19
3810-00-436-3158	97	
2530-00-436-3159	86	23
2530-00-436-3159	87	27
3815-00-436-3162	103	5
2910-00-438-1487	193	25
4730-00-439-1720	147	5
4730-00-439-1720	147	30
4730-00-439-1720	147	46
4730-00-439-1720	147	68
4730-00-439-1720	149	10
4730-00-439-1720	149	21
4730-00-439-1720	152	16
4730-00 439-1720	152	30
4730-00-439-1722	147	35
4730-00-439-1722	147	48
4730-00-439-1722	147	57
4730-00-439-1722	147	63
4730-00-439-1722	147	69
4730-00-439-1722	152	32
4730-00-439-1722	152	40
4730-00-439-1722	156	49
4730-00-439-1722	254	57
2940-00-439-6013	194	
4820-00-439-6016	175	
4730-00-439-6020	158	1
4730-00-439-6020	158	30
4730-00-439-6020	158	45
4730-00-439-6020	158	68
4730-00-439-6021	152	26
4730-00-439-6021	152	45
4730-00-439-6021	152	55
4730-00-439-6021	152	60
4730-00-439-6021	152	64
5306-00-440-7840	267	45
4730-00-441-2263	163	13
4730-00-441-8700	177	15
4720-00-442-5779	82	47
4720-00-442-5781	82	44
4720-00-442-5783	82	43
4720-00-442-5788	82	45
3810-00-442-5866	97	
5360-00-442-6981	97	13
5306-00-443-1952	97	14
5330-00-443-1969	89	9
4030-00-443-2067	9	6
4030-00-443-2067	92	45
6220-00-443-5582	14	5
5330-00-443-6043	14	6
2930-00-444-0160	66	
6680-00-445-1046	45	11
6680-00-449-4981	186	11
4730-00-449-5021	132	8
4730-00-449-5021	132	25
5330-00-450-6022	276	72
5305-00-450-7499	181	1
4730-00-450-9092	194	8
4730-00-450-9130	152	47
4730-00-450-9348	194	1
5310-00-451-0599	39	2
4730-00-451-1010	251	11
4730-00-451-2703	160	
4730-00-451-2703	171	
4730-00-451-2703	174	
4730-00-451-2703	177	
4730-00-451-2704	160	
4730-00-451-2704	168	
4730-00-451-4620	160	
4730-00-451-4620	171	

STOCK NUMBER	FIGURE NO.	ITEM NO.
4730-00-451-4620	171	
6220-00-451-4981	113	47
4720-00-453-5333	82	46
5330-00-453-6300	151	10
2590-00-453-8976	120	
2590-00-453-8976	121	
5330-00-454-0362	137	9
5330-00-454-0363	146	9
5330-00-454-0368	154	13
5330-00-454-0369	154	10
5330-00-454-0535	20	32
5330-00-454-0536	109	22
5325-00-455-0561	113	48
5325-00-455-0561	121	13
5325-00-455-0561	122	13
5315-00-455-2673	109	17
5365-00-455-6966	97	20
5365-00-455-6969	97	21
4730-00-455-8650	163	
4730-00-455-8650	163	2
5310-00-455-9977	97	22
4720-00-456-1079	23	11
5360-00-456-2456	10	4
5340-00-458-8064	126	26
4820-00-458-8067	166	
4820-00-458-8068	170	
5330-00-458-8485	181	3
4730-00-458-9705	149	8
4720-00-459-5944	191	37
2940-00-459-6559	194	17
2940-00-459-6560	194	13
4730-00-459-8286	82	40
4730-00-459-8286	82	50
4820-00-459-8292	193	12
4820-00-459-8298	169	
4820-00-459-8298	169	1
4820-00-460-2180	175	
4010-00-460-3137	260	102
5330-00-460-4643	276	108
4730-00-460-6130	160	14
4730-00-460-6130	178	62
2940-00-460-6978	194	19
2940-00-460-6979	194	16
4720-00-462-0333	30	6
3815-00-462-4693	90	8
3815-00-462-4693	93	8
3815-00-462-4693	102	10
5935-00-462-6603	13	43
5935-00-462-6603	111	63
5935-00-462-6603	111	78
5935-00-462-6603	111	198
5935-00-462-6603	111	207
4820-00-465-1589	191	14
4820-00-465-1589	191	43
4820-00-465-1589	191	61
5305-00-465-5856	36	9
5305-00-465-7845	154	6
5305-00-465-7854	153	4
5310-00-469-3998	219	2
5307-00-469-5403	258	14
5307-00-469-5403	260	14
5305-00-470-5797	158	42
5330-00-470-8147	276	107
5305-00-470-9694	16	10
5305-00-470-9703	86	35
5305-00-470-9703	87	29
4730-00-471-0045	120	5
4730-00-471-0045	158	2
4730-00-471-0045	158	31
4730-00-471-0045	158	44
4730-00-471-0045	158	69
4820-00-471-0049	229	31
2540-00-471-0232	276	2
2540-00-471-0233	276	21
5680-00-471-0234	276	28
5680-00-471-0234	276	31
3810-00-471-0235	276	
2540-00-471-0236	276	50
2540-00-471-0238	276	45
2540-00-471-0239	276	40

STOCK NUMBER	FIGURE NO.	ITEM NO.
5330-00-471-0240	276	41
2540-00-471-0241	276	56
2540-00-471-0243	276	67
2540-00-471-0245	276	62
2540-00-471-0248	276	87
2590-00-471-0363	120	15
2590-00-471-0363	121	22
2590-00-471-0363	122	22
4730-00-472-2611	160	
4730-00-472-2611	160	
4730-00-472-2611	182	
4730-00-472-2611	182	
4730-00-472-2611	182	
4730-00-472-2611	182	
4730-00-477-1741	129	3
4730-00-477-1741	255	9
4730-00-477-1741	256	5
4730-00-477-1741	256	15
4730-00-477-1741	257	5
4730-00-477-1741	257	10
4720-00-477-3301	31	2
4820-00-477-9779	46	4
4820-00-477-9779	47	4
4820-00-477-9779	61	9
2920-00-478-8062	219	9
4720-00-479-2763	120	11
4720-00-479-2763	121	8
4720-00-479-2763	122	8
5305-00-480-2334	36	11
4730-00-482-4136	182	4
4730-00-482-4136	182	109
5330-00-484-1816	154	9
3120-00-485-0019	91	16
3120-00-485-0019	91	37
2530-00-485-0993	90	9
2530-00-485-0993	93	9
2530-00-485-0993	102	11
4720-00-485-7167	32	11
4720-00-485-7167	32	17
5310-00-486-2505	215	4
5310-00-487-5330	185	11
5325-00-489-1066	18	40
5325-00-489-1066	18	43
5325-00-489-1067	20	29
5325-00-489-1067	109	24
5325-00-489-1067	109	33
5305-00-489-3883	49	29
5325-00-490-4755	268	61
5325-00-490-4755	268	75
5306-00-492-0340	86	41
5306-00-492-0340	87	41
5360-00-494-2724	91	9
5360-00-494-2724	101	1
5360-00-494-2726	95	4
5360-00-494-2726	96	4
4820-00-494-6555	172	
4820-00-494-6555	177	8
4730-00-497-1667	177	10
3120-00-498-7099	105	10
6105-00-512-9225	269	14
5310-00-514-6674	111	170
5310-00-514-6674	276	10
5310-00-519-6595	254	47
5306-00-519-6666	134	1
2530-00-521-4981	90	20
2530-00-521-4981	91	20
2530-00-521-4981	93	20
2530-00-521-4981	95	11
2530-00-521-4981	96	11
2530-00-521-4981	102	21
5310-00-521-8595	253	2
4730-00-522-2252	55	33
5360-00-526-5530	115	14
5330-00-531-3422	184	12
5305-00-537-0823	173	5
4730-00-540-2612	52	3
4730-00-540-2612	89	26
3815-00-541-9839	9	
5310-00-543-2410	24	10
5310-00-543-2410	268	55
5305-00-543-2419	64	1
5305-00-543-2419	224	34
5365-00-543-3615	46	12
5305-00-543-4302	276	60
5305-00-543-4718	111	121
5310-00-543-5101	186	18
5310-00-545-3651	39	3
6210-00-548-0504	274	17
6210-00-548-0504	275	17
5940-00-549-6581	24	55
5940-00-549-6581	111	
5940-00-549-6581	111	
5940-00-549-6581	111	103
5940-00-549-6581	111	108
5940-00-549-6583	24	54
5940-00-549-6583	111	
5940-00-549-6583	111	
5940-00-549-6583	111	109
5310-00-550-1130	132	59
5307-00-550-1879	57	10
5310-00-551-0433	46	8
4730-00-554-7540	147	75
4730-00-555-8292	147	774
4730-00-555-8997	173	7
5940-00-557-1627	13	44
5920-00-557-5057	7	25
5310-00-559-0070	269	13
5310-00-562-6553	229	2
5935-00-565-9503	111	45
5935-00-565-9503	111	51
5935-00-565-9503	111	60
5935-00-565-9503	111	166
6210-00-568-8039	274	
2090-00-570-1739	131	
5935-00-572-9180	111	9
5935-00-572-9180	111	16
5935-00-572-9180	111	40
5935-00-572-9180	111	67
2540-00-574-9161	276	76
6220-00-577-3434	113	
5330-00-579-7916	120	7
5330-00-579-7916	121	4
2940-00-580-6283	58	8
2940-00-580-6283	251	3
4730-00-580-6738	191	15
4730-00-580-7469	94	47
5310-00-582-5965	8	2
5310-00-582-5965	12	9
5310-00-582-5965	12	30
5310-00-582-5965	14	2
5310-00-582-5965	16	2
5310-00-582-5965	16	7
5310-00-582-5965	17	15
5310-00-582-5965	17	32
5310-00-582-5965	17	64
5310-00-582-5965	18	25
5310-00-582-5965	19	25
5310-00-582-5965	19	54
5310-00-582-5965	21	15
5310-00-582-5965	21	32
5310-00-582-5965	23	32
5310-00-582-5965	24	18
5310-00-582-5965	26	24
5310-00-582-5965	27	5
5310-00-582-5965	30	2
5310-00-582-5965	35	9
5310-00-582-5965	82	2
5310-00-582-5965	82	22
5310-00-582-5965	91	3
5310-00-582-5965	97	25
5310-00-582-5965	97	30
5310-00-582-5965	111	2
5310-00-582-5965	111	37
5310-00-582-5965	111	84
5310-00-582-5965	111	88
5310-00-582-5965	111	123
5310-00-582-5965	112	5
5310-00-582-5965	113	9

STOCK NUMBER	FIGURE NO.	ITEM NO.
5310-00-582-5965	113	13
5310-00-582-5965	113	16
5310-00-582-5965	115	9
5310-00-582-5965	121	16
5310-00-582-5965	122	16
5310-00-582-5965	140	2
5310-00-582-5965	140	14
5310-00-582-5965	140	22
5310-00-582-5965	147	18
5310-00-582-5965	149	17
5310-00-582-5965	149	37
5310-00-582-5965	152	18
5310-00-582-5965	154	7
5310-00-582-5965	156	22
5310-00-582-5965	163	38
5310-00-582-5965	163	50
5310-00-582-5965	163	56
5310-00-582-5965	171	25
5310-00-582-5965	174	62
5310-00-582-5965	178	35
5310-00-582-5965	178	55
5310-00-582-5965	178	72
5310-00-582-5965	182	37
5310-00-582-5965	182	53
5310-00-582-5965	182	69
5310-00-582-5965	182	85
5310-00-582-5965	182	98
5310-00-582-5965	182	115
5310-00-582-5965	182	128
5310-00-582-5965	182	138
5310-00-582-5965	185	2
5310-00-582-5965	186	9
5310-00-582-5965	191	5
5310-00-582-5965	191	21
5310-00-582-5965	191	26
5310-00-582-5965	193	9
5310-00-582-5965	193	18
5310-00-582-5965	195	7
5310-00-582-5965	195	13
5310-00-582-5965	195	17
5310-00-582-5965	195	19
5310-00-582-5965	254	54
5310-00-582-5965	267	51
5310-00-582-5965	267	55
5310-00-582-5965	267	63
5310-00-582-5965	268	5
5310-00-582-5965	268	8
5310-00-582-5965	268	13
5310-00-582-5965	268	22
5310-00-582-5965	268	25
5310-00-582-5965	268	28
5310-00-582-5965	272	2
5310-00-582-5965	272	4
5310-00-582-5965	272	6
5310-00-582-5965	273	58
5310-00-582-5965	273	61
5310-00-582-5965	276	89
5310-00-584-5272	2	8
5310-00-584-5272	11	6
5310-00-584-5272	23	20
5310-00-584-5272	23	44
5310-00-584-5272	25	1
5310-00-584-5272	26	19
5310-00-584-5272	40	2
5310-00-584-5272	81	2
5310-00-584-5272	88	27
5310-00-584-5272	88	39
5310-00-584-5272	90	14
5310-00-584-5272	90	18
5310-00-584-5272	90	35
5310-00-584-5272	91	18
5310-00-584-5272	93	14
5310-00-584-5272	93	18
5310-00-584-5272	93	35
5310-00-584-5272	95	9
5310-00-584-5272	96	9
5310-00-584-5272	97	2
5310-00-584-5272	97	40
5310-00-584-5272	102	14
5310-00-584-5272	102	18
5310-00-584-5272	111	191
5310-00-584-5272	156	15
5310-00-584-5272	168	35
5310-00-584-5272	178	19
5310-00-584-5272	186	4
5310-00-584-5272	189	57
5310-00-584-5272	219	3
5310-00-584-5272	276	86
5310-00-584-5272	277	18
5310-00-584-5272	277	44
5310-00-584-7888	9	9
5310-00-584-7888	9	23
5310-00-584-7888	9	45
5310-00-584-7888	254	59
5310-00-584-7889	9	17
5310-00-584-7889	10	7
4730-00-585-7987	23	1
5330-00-585-8249	186	20
3120-00-585-8812	9	42
4730-00-595-0083	147	2
4730-00-595-0083	147	52
4730-00-595-0083	149	2
4730-00-595-0385	32	29
4730-00-595-0676	94	48
4820-00-595-2761	150	
5360-00-598-6625	254	12
5330-00-599-5463	221	23
5306-00-604-7961	46	7
5330-00-604-8094	58	12
5330-00-606-6734	33	8
5330-00-608-6432	178	28
2590-00-612-2181	125	1
5330-00-612-3123	46	14
5306-00-613-9396	48	1
5310-00-614-3505	44	2
5315-00-616-5520	88	35
5315-00-616-5526	44	4
5310-00-616-7998	113	4
4730-00-618-5382	136	33
5310-00-619-5596	113	18
5360-00-619-8198	46	16
9905-00-626-0013	269	18
5305-00-626-0219	148	10
4730-00-626-0228	154	20
4730-00-628-4816	168	13
3120-00-629-2559	148	5
5330-00-629-6340	58	11
5315-00-631-1320	118	16
2530-00-632-3672	258	66
2530-00-632-3672	260	66
3815-00-633-5884	276	
2990-00-633-5903	30	9
2990-00-633-5903	185	
3830-00-637-2576	92	24
3830-00-637-2576	94	2
3830-00-637-2576	94	21
5310-00-637-9541	8	20
5310-00-637-9541	12	2
5310-00-637-9541	12	5
5310-00-637-9541	15	27
5310-00-637-9541	17	3
5310-00-637-9541	17	20
5310-00-637-9541	17	36
5310-00-637-9541	17	42
5310-00-637-9541	17	47
5310-00-637-9541	17	52
5310-00-637-9541	18	19
5310-00-637-9541	18	31
5310-00-637-9541	18	35
5310-00-637-9541	19	7
5310-00-637-9541	19	12
5310-00-637-9541	19	29
5310-00-637-9541	19	63
5310-00-637-9541	20	2
5310-00-637-9541	20	10
5310-00-637-9541	20	34
5310-00-637-9541	20	41
5310-00-637-9541	21	2
5310-00-637-9541	21	36
5310-00-637-9541	21	45

STOCK NUMBER	FIGURE NO.	ITEM NO.
5310-00-637-9541	22	2
5310-00-637-9541	26	14
5310-00-637-9541	27	2
5310-00-637-9541	27	9
5310-00-637-9541	27	13
5310-00-637-9541	28	6
5310-00-637-9541	30	14
5310-00-637-9541	32	5
5310-00-637-9541	32	36
5310-00-637-9541	32	39
5310-00-637-9541	35	13
5310-00-637-9541	35	18
5310-00-637-9541	37	2
5310-00-637-9541	47	2
5310-00-637-9541	49	5
5310-00-637-9541	49	9
5310-00-637-9541	49	26
5310-00-637-9541	49	30
5310-00-637-9541	57	4
5310-00-637-9541	63	11
5310-00-637-9541	63	15
5310-00-637-9541	64	2
5310-00-637-9541	64	7
5310-00-637-9541	65	5
5310-00-637-9541	65	10
5310-00-637-9541	72	2
5310-00-637-9541	82	14
5310-00-637-9541	85	27
5310-00-637-9541	86	21
5310-00-637-9541	87	25
5310-00-637-9541	89	8
5310-00-637-9541	89	12
5310-00-637-9541	89	16
5310-00-637-9541	91	32
5310-00-637-9541	103	2
5310-00-637-9541	109	14
5310-00-637-9541	117	6
5310-00-637-9541	117	10
5310-00-637-9541	120	2
5310-00-637-9541	121	10
5310-00-637-9541	122	10
5310-00-637-9541	145	10
5310-00-637-9541	152	37
5310-00-637-9541	158	25
5310-00-637-9541	168	21
5310-00-637-9541	171	39
5310-00-637-9541	174	69
5310-00-637-9541	177	26
5310-00-637-9541	178	43
5310-00-637-9541	184	10
5310-00-637-9541	192	22
5310-00-637-9541	194	4
5310-00-637-9541	194	10
5310-00-637-9541	199	18
5310-00-637-9541	199	20
5310-00-637-9541	219	8
5310-00-637-9541	221	5
5310-00-637-9541	224	6
5310-00-637-9541	224	14
5310-00-637-9541	224	22
5310-00-637-9541	224	29
5310-00-637-9541	224	35
5310-00-637-9541	229	6
5310-00-637-9541	253	4
5310-00-637-9541	267	10
5310-00-637-9541	267	28
5310-00-637-9541	267	32
5310-00-637-9541	267	37
5310-00-637-9541	268	16
5310-00-637-9541	268	19
5310-00-637-9541	268	114
5310-00-637-9541	268	133
5310-00-637-9541	271	27
5310-00-637-9541	276	95
5310-00-637-9541	277	7
5310-00-637-9541	277	24
5310-00-639-6385	252	11
4730-00-640-1051	82	7
4730-00-640-1051	86	16
4730-00-640-1051	94	44
2910-00-640-5622	252	
4010-00-641-3713	1	18
6240-00-643-0687	13	22

STOCK NUMBER	FIGURE NO.	ITEM NO.
6240-00-643-0687	15	4
6240-00-643-0687	271	6
2910-00-646-9727	30	12
2910-00-646-9727	185	17
4730-00-647-3207	32	31
5365-00-650-0979	148	3
2910-00-651-7667	46	11
5930-00-655-1518	111	221
5310-00-655-9544	86	6
5306-00-656-0358	36	15
5310-00-660-3381	25	12
3120-00-661-9415	9	31
5330-00-663-4773	252	7
5330-00-663-4773	252	18
6220-00-670-7692	114	
2590-00-678-6140	16	5
6220-00-678-9045	115	
6220-00-678-9046	113	5
5330-00-678-9047	114	3
6680-00-679-9300	206	1
5340-00-682-1506	19	
5340-00-682-1506	19	49
5320-00-682-1862	35	2
5330-00-682-7193	49	15
4730-00-683-8438	184	8
4730-00-684-7248	152	27
5310-00-685-8308	45	9
5935-00-686-2599	111	46
5935-00-686-2605	13	39
5935-00-686-2610	111	165
6240-00-686-4168	115	5
5305-00-688-2111	63	10
2540-00-690-2726	131	12
5315-00-693-0634	278	9
2590-00-693-3452	116	9
5930-00-699-9438	38	11
4730-00-702-2750	224	1
5360-00-704-4253	278	10
5340-00-704-9603	278	12
6145-00-705-6674	24	52
6145-00-705-6674	24	53
6145-00-705-6674	24	56
6145-00-705-6674	24	57
6145-00-705-6674	24	58
5940-00-705-6700	111	201
5940-00-705-6707	111	79
5940-00-705-6707	111	202
5940-00-705-6708	111	150
5940-00-705-6709	111	50
5940-00-705-6709	111	74
5940-00-705-6711	111	44
5940-00-705-6732	111	100
5940-00-705-6732	111	102
5940-00-705-6732	111	116
4730-00-706-8711	163	35
5365-00-708-3434	243	15
5365-00-708-7865	46	5
5305-00-709-8523	199	17
5305-00-709-8542	219	17
5305-00-710-4190	84	12
5305-00-710-4190	103	17
5305-00-710-4195	252	9
2815-00-712-5749	49	10
3810-00-718-4367	85	35
3810-00-718-4367	91	5
5330-00-718-7385	251	13
5340-00-719-4601	229	3
5340-00-719-4601	229	13
5305-00-719-5021	109	37
4730-00-720-0119	132	35
4730-00-720-0119	149	31
4730-00-720-0119	156	20
5340-00-720-6213	32	7
5340-00-721-5329	240	27
4730-00-722-1154	229	23
5305-00-724-5885	1	11
5305-00-724-5906	178	26
5305-00-724-5910	13	3
5305-00-724-5910	13	26
5305-00-724-5910	13	34
5305-00-724-5910	193	1
5305-00-724-5911	109	4

STOCK NUMBER	FIGURE NO.	ITEM NO.	STOCK NUMBER	FIGURE NO.	ITEM NO.
5305-00-724-5911	109	26	5310-00-732-0559	267	13
5305-00-724-5911	109	29	5365-00-732-0642	116	2
5340-00-724-7038	156	6	5330-00-733-4599	142	5
5305-00-724-7220	254	60	5310-00-735-0572	49	32
5305-00-725-2317	53	4	5940-00-735-5520	111	105
5305-00-725-4133	120	12	9340-00-736-8529	276	16
5305-00-725-4133	121	19	2590-00-737-3216	125	
5305-00-725-4133	122	19	5305-00-737-5694	116	1
5305-00-725-4138	113	70	2520-00-741-7268	181	5
5305-00-725-4183	90	13	5360-00-745-7791	49	19
5305-00-725-4183	90	15	6220-00-752-5993	13	4
5305-00-725-4183	91	17	6220-00-752-5993	113	34
5305-00-725-4183	93	13	6220-00-752-5993	113	40
5305-00-725-4183	93	15	6220-00-752-6516	113	33
5305-00-725-4183	102	15	6220-00-752-6516	113	39
5305-00-725-4187	90	17	4820-00-752-9040	252	4
5305-00-725-4187	93	17	4820-00-752-9040	252	13
5305-00-725-4187	102	17	5365-00-753-9528	42	25
5310-00-725-7382	95	7	5310-00-754-2005	184	17
6220-00-726-1916	13		5360-00-755-0429	179	5
6220-00-727-3288	13		5330-00-755-7191	142	3
5310-00-728-2044	113	2	2530-00-755-7198	142	2
5310-00-728-2044	113	25	4730-00-755-7609	184	11
5310-00-728-2044	117	15	5310-00-761-0654	171	40
5310-00-728-2044	276	9	5310-00-761-0654	194	11
6220-00-729-9295	113		5310-00-761-0654	276	96
5340-00-731-9611	120	10	5305-00-761-4227	102	13
5340-00-731-9611	121	7	5310-00-761-6882	8	3
5340-00-731-9611	122	7	5310-00-761-6882	14	3
5310-00-732-0558	12	6	5310-00-761-6882	16	1
5310-00-732-0558	17	4	5310-00-761-6882	16	1
5310-00-732-0558	17	21	5310-00-761-6882	16	6
5310-00-732-0558	17	37	5310-00-761-6882	18	26
5310-00-732-0558	17	43	5310-00-761-6882	24	19
5310-00-732-0558	17	48	5310-00-761-6882	27	4
5310-00-732-0558	17	53	5310-00-761-6882	30	3
5310-00-732-0558	18	21	5310-00-761-6882	35	10
5310-00-732-0558	18	33	5310-00-761-6882	72	1
5310-00-732-0558	18	37	5310-00-761-6882	82	3
5310-00-732-0558	19	9	5310-00-761-6882	111	3
5310-00-732-0558	19	14	5310-00-761-6882	111	188
5310-00-732-0558	19	31	5310-00-761-6882	113	8
5310-00-732-0558	19	65	5310-00-761-6882	121	17
5310-00-732-0558	19	76	5310-00-761-6882	122	17
5310-00-732-0558	20	4	5310-00-761-6882	140	3
5310-00-732-0558	20	12	5310-00-761-6882	140	15
5310-00-732-0558	20	26	5310-00-761-6882	140	23
5310-00-732-0558	21	4	5310-00-761-6882	147	39
5310-00-732-0558	21	21	5310-00-761-6882	149	18
5310-00-732-0558	21	38	5310-00-761-6882	156	23
5310-00-732-0558	21	43	5310-00-761-6882	163	39
5310-00-732-0558	32	37	5310-00-761-6882	163	57
5310-00-732-0558	32	40	5310-00-761-6882	174	61
5310-00-732-0558	35	19	5310-00-761-6882	178	71
5310-00-732-0558	37	1	5310-00-761-6882	185	3
5310-00-732-0558	47	3	5310-00-761-6882	191	4
5310-00-732-0558	87	2	5310-00-761-6882	191	20
5310-00-732-0558	89	11	5310-00-761-6882	191	25
5310-00-732-0558	89	15	5310-00-761-6882	195	6
5310-00-732-0558	97	3	5310-00-761-6882	267	52
5310-00-732-0558	102	1	5310-00-761-6882	267	56
5310-00-732-0558	117	7	5310-00-761-6882	267	64
5310-00-732-0558	117	12	5310-00-761-6882	268	21
5310-00-732-0558	145	9	5310-00-761-6882	268	24
5310-00-732-0558	156	55	5310-00-761-6882	268	27
5310-00-732-0558	174	70	5310-00-761-6882	268	47
5310-00-732-0558	177	25	5310-00-761-6882	268	67
5310-00-732-0558	178	42	5310-00-761-6882	268	110
5310-00-732-0558	194	5	5310-00-761-6882	268	125
5310-00-732-0558	195	22	4730-00-762-1239	160	6
5310-00-732-0558	267	38	4730-00-762-1239	160	29
5310-00-732-0558	268	54	4730-00-762-1239	163	3
5310-00-732-0558	268	113	4730-00-762-4161	229	15
5310-00-732-0558	268	132	5310-00-762-6248	9	18
5310-00-732-0558	270	15	5310-00-762-6248	10	6
5310-00-732-0558	271	28	5310-00-763-0038	134	2
5310-00-732-0559	85	28	5330-00-763-0060	19	47
5310-00-732-0559	86	22	4730-00-763-7700	178	1
5310-00-732-0559	87	26	5310-00-763-8901	163	9
5310-00-732-0559	96	7	5310-00-763-8905	97	10

STOCK NUMBER	FIGURE NO.	ITEM NO.
5310-00-763-8905	120	14
5310-00-763-8905	121	21
5310-00-763-8905	122	21
5310-00-763-8920	9	13
5310-00-763-8920	13	14
5310-00-763-8920	113	72
5310-00-763-8921	9	10
5310-00-763-8921	9	24
5310-00-763-8921	9	46
5310-00-763-8921	118	3
5305-00-764-0070	114	1
5305-00-764-0086	109	40
5340-00-764-7051	132	38
5340-00-764-7051	147	8
5340-00-764-7051	149	26
5340-00-764-7051	149	51
5340-00-764-7051	156	34
2510-00-764-7918	19	69
2510-00-764-7943	18	13
2510-00-764-7943	19	71
2510-00-764-7972	18	11
4730-00-764-8771	136	29
4730-00-764-8771	136	37
4730-00-764-8771	145	22
4730-00-764-8771	145	34
4730-00-764-8771	145	38
4730-00-764-8771	145	42
5355-00-765-5688	36	10
5935-00-767-7936	111	199
5310-00-768-0318	2	7
5310-00-768-0318	8	19
5310-00-768-0318	18	15
5310-00-768-0318	25	3
5310-00-768-0318	26	18
5310-00-768-0318	40	3
5310-00-768-0318	42	4
5310-00-768-0318	88	26
5310-00-768-0318	88	38
5310-00-768-0318	90	36
5310-00-768-0318	93	36
5310-00-768-0318	113	62
5310-00-768-0318	113	67
5310-00-768-0318	156	16
5310-00-768-0318	168	36
5310-00-768-0318	189	58
5310-00-768-0318	276	84
5310-00-768-0318	277	45
5310-00-768-0319	49	27
5310-00-768-0319	97	26
5310-00-768-0319	115	8
5310-00-768-0319	132	60
5310-00-768-0319	267	40
5310-00-768-0319	267	46
5310-00-771-4911	278	14
2540-00-771-6665	268	103
5935-00-771-6793	111	61
6350-00-772-7664	268	7
5935-00-773-1428	111	4
1450-00-775-1359	49	16
1450-00-775-1359	49	20
5306-00-775-5209	42	36
2530-00-775-5723	148	7
3030-00-778-1241	65	1
5340-00-778-2738	178	65
5310-00-780-8116	43	2
5306-00-780-9096	31	
5305-00-782-9494	25	1
5305-00-782-9494	40	1
5305-00-782-9494	189	56
5305-00-782-9494	218	7
5305-00-782-9494	268	140
5305-00-782-9495	8	18
5305-00-782-9495	81	1
5305-00-782-9495	113	60
5305-00-782-9495	186	3
5305-00-782-9495	277	43
5310-00-784-0033	252	10
5315-00-784-1195	268	41
2910-00-787-6552	252	12
2540-00-788-5637	272	8
2815-00-788-6639	49	13
4730-00-789-3090	182	2
5930-00-791-5311	38	15
5930-00-791-5311	273	
5310-00-791-8057	258	65
5310-00-791-8057	260	65
2530-00-792-1981	146	2
4710-00-792-8984	68	1
2910-00-792-8985	47	10
6620-00-792-9032	64	5
3655-00-794-1109	82	51
2910-00-799-0884	252	
2590-00-801-2355	268	60
4730-00-801-8186	224	19
4730-00-801-8186	224	41
5360-00-801-8731	58	14
5365-00-801-9828	128	12
4720-00-802-2038	40	46
5310-00-804-1209	131	13
5330-00-804-5694	168	15
5330-00-804-5694	168	19
5330-00-804-5694	171	4
5330-00-804-5694	182	145
5330-00-804-5694	182	177
5330-00-804-5695	160	2
5330-00-804-5695	163	34
5330-00-804-5695	163	53
5330-00-804-5695	171	11
5330-00-804-5695	182	3
5330-00-804-5695	182	5
5330-00-804-5695	182	8
5330-00-804-5695	182	62
5330-00-804-5695	182	110
5330-00-804-5695	182	136
5330-00-805-2966	182	29
5935-00-807-4109	115	3
5330-00-808-0794	158	3
5330-00-808-0794	158	12
5330-00-808-0794	158	33
5330-00-808-0794	158	41
5330-00-808-0794	158	46
5330-00-808-0794	158	67
5330-00-808-0794	158	71
5330-00-808-0794	160	9
5330-00-808-0794	160	26
5330-00-808-0794	160	32
5330-00-808-0794	174	6
5330-00-808-0794	174	23
5330-00-808-0794	254	3
5330-00-808-0794	254	6
5330-00-808-0794	254	9
5330-00-808-0794	254	11
5330-00-808-0794	254	20
5330-00-808-0794	254	25
5330-00-808-0794	254	28
5330-00-808-0794	254	36
5330-00-808-0794	254	39
5330-00-808-0794	254	43
5330-00-808-0794	254	46
5340-00-809-1494	111	38
5340-00-809-1494	178	56
5340-00-809-1494	254	55
5310-00-809-4058	26	25
5310-00-809-4058	111	124
5310-00-809-4058	117	3
5310-00-809-4058	267	62
5310-00-809-4061	111	126
5310-00-809-4061	276	85
5310-00-809-5997	87	7
5310-00-809-5997	88	16
5310-00-809-5997	88	20
5310-00-809-5997	90	7
5310-00-809-5997	102	9
5310-00-809-5998	34	2
5310-00-809-8541	88	9
5310-00-809-8541	88	13
5310-00-809-8541	88	34
5310-00-811-3494	267	4
4730-00-811-6205	82	49
4730-00-812-0924	160	23

STOCK NUMBER	FIGURE NO.	ITEM NO.
4730-00-812-0924	160	49
4730-00-812-0924	178	
4730-00-812-2434	174	27
5315-00-812-3425	267	20
5315-00-812-3425	267	23
4730-00-812-7999	92	2
6210-00-813-7814	275	
4730-00-813-9611	168	30
6685-00-814-5271	26	2
5315-00-815-8840	267	16
5330-00-816-3546	168	27
5330-00-816-3546	174	51
5330-00-816-3546	178	16
5330-00-816-3546	182	150
5330-00-816-3546	182	179
5325-00-816-4242	268	73
5945-00-817-7894	24	8
5310-00-820-6653	9	12
5310-00-820-6653	13	15
5310-00-820-6653	109	5
5310-00-820-6653	109	27
5310-00-820-6653	105	30
5310-00-820-6653	113	71
5310-00-820-6653	113	74
5310-00-820-6653	124	2
5310-00-820-6653	178	27
5310-00-820-6653	193	2
5310-00-820-6653	254	61
5310-00-820-6653	277	16
4730-00-821-0251	17	9
5315-00-821-2437	118	18
5310-00-821-6801	109	41
5310-00-821-6816	109	44
5340-00-823-5322	111	196
5310-00-823-8803	91	13
5310-00-823-8804	112	6
5310-00-823-8804	147	19
5310-00-823-8804	163	55
5310-00-823-8804	193	10
5310-00-823-8804	276	98
5310-00-824-4542	17	2
5310-00-824-4542	17	19
5310-00-824-4542	17	35
5310-00-824-4542	17	51
5310-00-824-4542	18	20
5310-00-824-4542	18	32
5310-00-824-4542	18	36
5310-00-824-4542	19	8
5310-00-824-4542	19	13
5310-00-824-4542	19	30
5310-00-824-4542	19	64
5310-00-824-4542	19	75
5310-00-824-4542	20	3
5310-00-824-4542	20	11
5310-00-824-4542	20	25
5310-00-824-4542	21	3
5310-00-824-4542	21	19
5310-00-824-4542	21	37
5310-00-824-4542	21	42
5310-00-824-4542	36	26
5310-00-824-4547	109	38
5315-00-825-8353	163	46
4730-00-827-0094	191	18
4730-00-828-0169	149	56
5365-00-832-5650	115	2
5305-00-832-5743	115	1
5330-00-833-0870	58	5
5310-00-833-8567	111	8
5310-00-833-8567	111	15
5310-00-833-8567	111	39
5310-00-833-8567	111	66
5310-00-833-8567	111	204
5310-00-833-8567	113	30
5310-00-834-8734	88	4
5310-00-834-8734	88	7
5310-00-834-8734	88	15
5310-00-834-8734	88	19
5310-00-834-8734	90	10
5310-00-834-8734	90	16
5310-00-834-8760	258	60

STOCK NUMBER	FIGURE NO.	ITEM NO.
5310-00-834-8760	260	60
5310-00-835-2037	97	11
2815-00-837-8386	49	11
5315-00-839-2325	68	4
5315-00-839-2325	267	42
5315-00-839-2326	36	21
5315-00-839-2326	149	40
5315-00-839-5820	118	12
5315-00-839-5821	87	6
5315-00-839-5822	86	1
5315-00-839-5822	88	2
5315-00-839-5822	91	27
2540-00-840-0022	117	1
5315-00-842-3044	17	27
5315-00-842-3044	17	59
5315-00-842-3044	19	20
5315-00-842-3044	21	10
5315-00-842-3044	21	27
5315-00-842-3044	37	17
5315-00-842-3044	91	8
5315-00-842-3044	95	19
5315-00-842-3044	96	19
5315-00-842-3044	163	45
2530-00-844-2527	148	
4730-00-844-3308	178	52
4730-00-845-0067	98	22
4730-00-845-0067	99	2
5315-00-845-4232	118	13
5315-00-846-0126	254	49
5935-00-846-3884	111	54
5935-00-846-4236	111	48
5315-00-846-4297	9	32
5315-00-846-4297	11	1
5315-00-846-4297	11	17
5330-00-846-9841	46	9
5330-00-846-9841	47	8
4820-00-849-1220	191	19
3930-00-849-8925	191	22
3930-00-849-8925	191	27
5360-00-850-3762	146	10
4730-00-850-3779	146	5
5310-00-850-6876	91	12
5310-00-851-2677	13	16
5310-00-851-2682	158	24
5310-00-851-2682	272	12
4730-00-851-4384	182	67
4730-00-851-4384	182	72
4730-00-851-4384	182	126
4730-00-851-4384	182	131
5310-00-853-9335	26	20
2530-00-856-3542	142	6
4730-00-858-3491	163	36
3830-00-858-8132	118	6
3830-00-858-8133	118	5
2910-00-863-9610	252	1
5340-00-865-9496	118	14
2540-00-869-0424	269	
5330-00-869-3369	42	44
6220-00-869-3712	131	
5306-00-870-6222	58	4
6220-00-871-6154	271	24
6680-00-873-6649	60	1
5310-00-877-5796	117	2
4820-00-878-3426	182	166
5330-00-878-6485	146	6
5310-00-880-7744	23	42
5310-00-880-7744	25	4
5310-00-880-7744	86	4
5310-00-880-7744	91	4
5310-00-880-7744	91	6
5310-00-880-7744	113	1
5310-00-880-7744	117	16
5310-00-880-7744	268	1
5310-00-880-7744	268	34
5310-00-880-7744	268	120
5310-00-880-7745	57	5
5310-00-880-7745	193	20
5310-00-880-7746	113	24
4730-00-881-1161	23	13
4730-00-883-0643	163	20

STOCK NUMBER	FIGURE NO.	ITEM NO.
4730-00-883-8448	182	7
4730-00-883-8448	182	61
5340-00-886-2187	13	21
5930-00-888-9865	147	40
6145-00-889-0581	13	41
5310-00-889-2527	268	121
5310-00-889-2528	276	58
5305-00-889-2997	24	9
5305-00-889-3000	38	6
5305-00-889-3000	111	21
5305-00-889-3000	111	29
5305-00-899-3000	111	143
5305-00-889-3000	111	216
5305-00-889-3002	113	44
5305-00-889-3002	116	7
5310-00-891-1711	84	5
5310-00-891-1752	276	8
4730-00-891-7059	257	13
4730-00-891-7059	258	58
4730-00-891-7059	258	69
4730-00-891-7059	260	58
4730-00-891-7059	260	69
4730-00-891-9967	136	20
4730-00-891-9967	152	41
4730-00-892-2066	158	40
4730-00-892-2066	158	66
4730-00-892-2066	160	30
4730-00-892-2066	162	4
5315-00-894-2467	11	18
6230-00-895-3192	15	
6230-00-895-3192	271	29
3930-00-899-4390	175	5
3930-00-899-4390	179	2
5315-00-899-5931	10	1
2590-00-900-1640	132	57
5307-00-900-8519	27	16
2990-00-901-1290	68	13
2930-00-901-1319	63	16
4730-00-902-1949	64	18
2815-00-902-1951	57	8
4730-00-902-8991	147	32
5310-00-903-3992	27	12
5310-00-903-3992	57	3
5310-00-903-3994	111	119
5305-00-903-7298	9	43
5305-00-903-7298	254	62
5310-00-905-0762	111	85
5310-00-905-0762	111	89
5310-00-905-0762	111	115
5310-00-905-0762	178	34
5310-00-905-0762	182	137
5310-00-905-0762	195	14
5310-00-905-0762	268	4
5310-00-905-0762	268	12
5310-00-905-0762	276	90
5340-00-905-0790	111	203
4730-00-908-3193	22	5
4730-00-908-3194	112	1
4730-00-908-3195	191	7
4730-00-908-3195	191	36
4730-00-908-6292	178	24
4730-00-908-6293	178	32
4730-00-908-6667	160	11
4730-00-908-6667	160	48
2940-00-908-9733	58	
2920-00-909-2483	43	14
4730-00-909-8627	26	3
4730-00-909-8627	168	6
2540-00-910-8932	276	25
5310-00-913-7020	163	49
5330-00-914-0703	42	26
4820-00-914-4697	174	5
4720-00-918-9634	224	3
5325-00-921-0960	268	46
5325-00-921-0960	268	62
4730-00-921-3243	147	
4730-00-921-3245	140	27
4730-00-921-3245	156	13
5340-00-921-5379	60	7
3040-00-921-6412	185	

STOCK NUMBER	FIGURE NO.	ITEM NO.
5340-00-921-6993	111	27
5340-00-921-6993	132	3
5305-00-922-7994	9	8
5310-00-922-2017	45	8
5340-00-922-5659	276	14
5340-00-922-5659	276	15
2520-00-922-6287	200	3
5315-00-925-4813	9	1
5340-00-929-1794	111	28
5340-00-929-1794	111	97
2530-00-929-5517	137	
5330-00-930-3244	47	7
5930-00-930-5016	35	11
5930-00-930-5016	111	90
5310-00-931-8167	111	171
5310-00-931-8167	195	1
2910-00-932-4842	47	11
3020-00-932-4846	43	5
2990-00-932-7391	49	21
2990-00-932-7392	49	18
2910-00-932-9634	46	6
5340-00-933-0698	194	14
4730-00-933-0726	178	57
4730-00-933-0728	160	27
4730-00-933-0742	160	
4730-00-933-0742	254	10
2030-00-933-1630	36	17
2030-00-933-1630	37	25
6680-00-933-3599	273	24
6680-00-933-3600	38	18
4730-00-934-7970	160	17
5310-00-934-9739	268	40
5310-00-934-9747	111	23
5310-00-934-9747	111	31
5310-00-934-9747	111	145
5310-00-934-9747	111	214
5310-00-934-9751	36	30
5310-00-934-9751	37	11
5310-00-934-9751	37	22
5310-00-934-9751	45	7
5310-00-934-9751	113	55
5310-00-934-9751	193	5
5310-00-934-9751	268	37
5310-00-934-9757	37	7
5310-00-934-9757	88	44
5310-00-934-9757	111	57
5310-00-934-9757	111	138
5310-00-934-9757	113	46
5310-00-934-9757	268	100
5310-00-934-9757	269	12
5310-00-934-9757	273	9
5310-00-934-9758	13	1
5310-00-934-9758	13	12
5310-00-934-9758	36	6
5310-00-934-9758	113	17
5310-00-934-9758	113	27
5310-00-934-9758	113	50
5310-00-934-9758	156	33
5310-00-934-9758	268	85
5310-00-934-9758	268	90
5310-00-934-9758	268	95
5310-00-934-9758	268	106
5310-00-934-9759	8	8
9905-00-935-3863	132	6
9905-00-935-3863	132	11
9905-00-935-3863	132	17
9905-00-935-3863	132	22
9905-00-935-3863	132	28
9905-00-935-3863	132	33
9905-00-935-3863	132	40
9905-00-935-3863	132	44
9905-00-935-3863	132	48
9905-00-935-3863	136	4
9905-00-935-3863	136	22
9905-00-935-3863	136	25
9905-00-935-3863	136	31
9905-00-935-3863	136	35
9905-00-935-3863	140	24
9905-00-935-3863	140	31
9905-00-935-3863	145	16
9905-00-935-3863	145	19

STOCK NUMBER	FIGURE NO.	ITEM NO.
9905-00-935-3863	145	24
9905-00-935-3863	145	28
9905-00-935-3863	145	32
9905-00-935-3863	145	36
9905-00-935-3863	145	40
9905-00-935-3863	145	44
9905-00-935-3863	147	
9905-00-935-3863	149	
9905-00-935-3863	149	
9905-00-935-3863	149	
9905-00-935-3863	149	
9905-00-935-3863	149	
9905-00-935-3863	149	
9905-00-935-3863	149	
9905-00-935-3863	149	
9905-00-935-3863	149	
9905-00-935-3863	149	
9905-00-935-3863	149	
9905-00-935-3863	149	
9905-00-935-3863	152	
9905-00-935-3863	152	
9905-00-935-3863	152	
9905-00-935-3863	152	
9905-00-935-3863	152	
9905-00-935-3863	152	
9905-00-935-3863	152	
9905-00-935-3863	152	
9905-00-935-3863	152	
9905-00-935-3863	152	
9905-00-935-3863	152	
9905-00-935-3863	152	
9905-00-935-3863	152	
9905-00-935-3863	152	
9905-00-935-3863	152	
9905-00-935-3863	152	
9905-00-935-3863	152	
9905-00-935-3863	152	
9905-00-935-3863	152	
9905-00-935-3863	152	
9905-00-935-3863	156	
9905-00-935-3863	156	20
9905-00-935-3863	158	
9905-00-935-3863	158	
9905-00-935-3863	158	
9905-00-935-3863	158	
9905-00-935-3863	158	
9905-00-935-3863	158	
9905-00-935-3863	158	
9905-00-935-3863	158	
9905-00-935-3863	158	
9905-00-935-3863	158	
9905-00-935-3863	158	
9905-00-935-3863	158	
9905-00-935-3863	158	
9905-00-935-3863	158	
9905-00-935-3863	158	
9905-00-935-3863	158	
9905-00-935-3863	158	
9905-00-935-3863	158	
9905-00-935-3863	158	
9905-00-935-3863	158	
9905-00-935-3863	158	
9905-00-935-3863	158	
9905-00-935-3863	158	
9905-00-935-3863	158	
9905-00-935-3863	158	
9905-00-935-3863	160	
9905-00-935-3863	160	
9905-00-935-3863	160	
9905-00-935-3863	160	
9905-00-935-3863	160	
9905-00-935-3863	160	
9905-00-935-3863	168	
9905-00-935-3863	171	
9905-00-935-3863	171	
9905-00-935-3863	171	
9905-00-935-3863	171	
9905-00-935-3863	174	
9905-00-935-3863	174	
9905-00-935-3863	174	
9905-00-935-3863	174	
9905-00-935-3863	174	
9905-00-935-3863	174	
9905-00-935-3863	174	
9905-00-935-3863	174	
9905-00-935-3863	174	
9905-00-935-3863	174	
9905-00-935-3863	174	
9905-00-935-3863	174	
9905-00-935-3863	174	
9905-00-935-3863	174	
9905-00-935-3863	174	
9905-00-935-3863	182	
9905-00-935-3863	182	
9905-00-935-3863	182	
9905-00-935-3863	182	
9905-00-935-3863	182	
9905-00-935-3863	182	
9905-00-935-3863	182	
9905-00-935-3863	182	
9905-00-935-3863	182	
9905-00-935-3863	182	
9905-00-935-3863	182	
9905-00-935-3863	182	
9905-00-935-3863	182	
9905-00-935-3863	182	
9905-00-935-3863	182	
9905-00-935-3863	182	
9905-00-935-3863	182	
9905-00-935-3863	182	
9905-00-935-3863	182	
9905-00-935-3863	182	
9905-00-935-3863	182	
9905-00-935-3863	182	
9905-00-935-3863	182	
9905-00-935-3863	182	
9905-00-935-3863	182	
9905-00-935-3863	182	
9905-00-935-3863	182	
9905-00-935-3863	182	
9905-00-935-3863	182	
9905-00-935-3863	182	
9905-00-935-7777	140	17
9905-00-935-7777	140	35
9905-00-935-7777	152	
9905-00-935-7777	152	
9905-00-935-7777	158	
9905-00-935-7777	158	
9905-00-935-7777	158	
9905-00-935-7777	158	
9905-00-935-7777	158	
9905-00-935-7777	158	
9905-00-935-7777	158	
9905-00-935-7777	158	
9905-00-935-7777	158	
9905-00-935-7777	158	
9905-00-935-7777	158	
9905-00-935-7777	158	
9905-00-935-7777	160	
9905-00-935-7777	160	
9905-00-935-7777	160	
9905-00-935-7777	160	
9905-00-935-7777	160	
9905-00-935-7777	160	
9905-00-935-7777	160	
9905-00-935-7777	160	
9905-00-935-7777	160	
9905-00-935-7777	163	
9905-00-935-7777	168	
9905-00-935-7777	168	
9905-00-935-7777	168	
9905-00-935-7777	168	
9905-00-935-7777	168	
9905-00-935-7777	168	
9905-00-935-7777	168	
9905-00-935-7777	168	
9905-00-935-7777	168	
9905-00-935-7777	168	24
9905-00-935-7777	171	
9905-00-935-7777	171	

STOCK NUMBER	FIGURE NO.	ITEM NO.
9905-00-935-7777	171	
9905-00-935-7777	171	
9905-00-935-7777	171	
9905-00-935-7777	174	
9905-00-935-7777	174	
9905-00-935-7777	174	
9905-00-935-7777	174	
9905-00-935-7777	174	
9905-00-935-7777	174	
9905-00-935-7777	174	
9905-00-935-7777	174	
9905-00-935-7777	174	
9905-00-935-7777	174	
9905-00-935-7777	174	
9905-00-935-7777	174	
9905-00-935-7777	174	
9905-00-935-7777	174	
9905-00-935-7777	174	
9905-00-935-7777	174	
9905-00-935-7777	178	
9905-00-935-7777	182	
9905-00-935-7777	182	
9905-00-935-7777	182	
9905-00-935-7777	182	
9905-00-935-7777	182	
9905-00-935-7777	182	
9905-00-935-7777	182	
9905-00-935-7777	182	
9905-00-935-7777	182	
9905-00-935-7777	182	
9905-00-935-7777	182	
9905-00-935-7777	199	
6685-00-936-2138	38	14
6685-00-936-2138	273	26
6685-00-936-2139	38	19
3815-00-938-5862	9	21
6620-00-938-8212	38	17
5306-00-940-9028	71	1
5306-00-940-9028	71	4
5306-00-940-9079	63	14
4720-00-941-1584	194	2
5305-00-942-2196	12	4
5305-00-942-2196	18	18
5305-00-942-2196	18	30
5305-00-942-2196	18	34
5305-00-942-2196	19	6
5305-00-942-2196	19	11
5305-00-942-2196	19	28
5305-00-942-2196	19	62
5305-00-942-2196	19	73
5305-00-942-2196	20	1
5305-00-942-2196	20	9
5305-00-942-2196	20	23
5305-00-942-2196	21	1
5305-00-942-2196	21	35
5305-00-942-2196	21	40
5305-00-942-2196	21	47
5305-00-942-2196	26	13
5305-00-942-2196	30	13
5305-00-942-2196	32	1
5305-00-942-2196	47	1
5305-00-942-2196	53	1
5305-00-942-2196	91	31
5305-00-942-2196	97	15
5305-00-942-2196	152	36
5305-00-942-2196	171	38
5305-00-942-2196	192	21
5305-00-942-2196	194	3
5305-00-942-2196	194	9
5305-00-942-2196	219	6
5305-00-942-2196	252	19
5305-00-942-2196	267	27
5305-00-942-2196	267	31
5305-00-942-2196	277	23
5310-00-943-2141	93	10
5310-00-943-2141	93	16
5310-00-943-2141	102	16
5930-00-944-1660	32	20
2940-00-944-2082	58	
5305-00-946-4847	9	22
4730-00-946-7823	178	67
5305-00-947-4354	254	58
4730-00-947-6512	193	26
5310-00-950-1310	49	6

STOCK NUMBER	FIGURE NO.	ITEM NO.
2530-00-951-3783	155	
4730-00-951-6658	31	1
6220-00-953-4652	13	17
5310-00-953-8628	111	120
5305-00-957-6647	36	4
4730-00-958-1475	177	7
5305-00-958-4354	8	12
4730-00-959-1629	149	55
5310-00-959-4679	148	11
5305-00-961-6507	194	18
4010-00-961-9780	2	11
5330-00-964-6318	194	15
4730-00-964-7776	177	22
5310-00-965-6000	42	27
3110-00-967-8632	19	59
5305-00-969-3141	10	5
2990-00-973-0420	236	1
5310-00-975-2075	49	31
5310-00-975-2075	85	17
5310-00-975-2075	87	17
5315-00-978-2019	148	2
2010-00-981-3229	260	1
5310-00-982-4937	160	43
5310-00-982-4937	171	19
5310-00-982-4937	177	43
5310-00-982-4950	174	56
5310-00-982-6569	9	33
5310-00-982-6584	103	30
5940-00-983-6105	111	213
5680-00-983-6711	276	53
5680-00-983-6711	276	77
5680-00-983-6711	276	81
5680-00-983-6721	276	52
5680-00-983-6721	276	82
5305-00-983-6730	268	42
5305-00-984-4981	267	66
5305-00-984-4983	36	1
5305-00-984-4983	38	22
5305-00-984-4989	24	13
5305-00-984-5680	31	18
5305-00-984-5687	121	9
5305-00-984-5687	122	9
5305-00-984-5689	36	25
5305-00-984-5691	12	1
5305-00-984-5691	109	1
5305-00-984-5692	276	94
5305-00-984-5693	268	134
5305-00-984-6189	109	43
5305-00-984-6189	273	43
5305-00-984-6191	37	5
5305-00-984-6191	88	43
5305-00-984-6191	116	8
5305-00-984-6193	111	55
5305-00-984-6193	111	136
5305-00-984-6195	268	102
5305-00-984-6196	45	4
5305-00-984-6200	273	11
5305-00-984-6208	24	3
5305-00-984-6209	147	6
5305-00-984-6209	149	24
5305-00-984-6209	149	49
5305-00-984-6209	152	4
5305-00-984-6209	153	1
5305-00-984-6209	156	4
5305-00-984-6212	111	33
5305-00-984-6212	113	29
5305-00-984-6212	156	31
5305-00-984-6212	268	108
5305-00-984-6213	19	36
5305-00-984-6213	113	20
5305-00-984-6213	113	53
5305-00-984-6216	171	21
5305-00-984-6216	174	57
5305-00-984-6221	38	23
5340-00-984-8540	171	23
5340-00-984-8540	171	26
5340-00-984-8540	174	58
5340-00-984-8540	174	63
5305-00-988-1721	269	5
5305-00-988-1721	269	9
5305-00-988-1721	273	21
5305-00-988-1723	121	15

STOCK NUMBER	FIGURE NO.	ITEM NO.
5305-00-988-1725	91	2
5305-00-988-1727	12	8
5305-00-988-1727	276	88
5305-00-989-1366	12	25
5305-00-989-7434	23	17
5305-00-989-7434	23	23
5305-00-989-7434	23	28
5305-00-989-7434	36	3
5305-00-989-7434	120	8
5305-00-989-7434	121	5
5305-00-989-7434	122	5
5305-00-989-7434	193	13
5305-00-989-7434	268	39
5305-00-989-7434	273	1
5305-00-989-7435	19	56
5340-00-990-7610	185	23
2590-00-991-0678	125	
5935-00-991-3332	13	38
5305-00-993-1848	36	28
5305-00-993-1848	37	9
5305-00-993-1848	37	20
5305-00-993-1848	182	42
5305-00-993-1848	182	73
5305-00-993-1848	182	102
5305-00-993-1848	193	3
5305-00-993-2464	97	24

STOCK NUMBER	FIGURE NO.	ITEM NO.
5305-00-993-2464	97	29
5310-00-997-1888	273	59
5310-00-997-1888	273	62
5310-00-999-2291	42	3
5310-00-999-2296	42	5
9905-00-999-7369	147	4
9905-00-999-7369	149	3
9905-00-999-7370	147	3
9905-00-999-7370	147	53
5310-01-004-9535	84	6
4720-01-006-3350	64	22
4730-01-007-3664	140	39
4730-01-008-3588	152	22
4730-01-008-3588	152	35
4730-01-008-7827	149	57
5305-01-010-2362	178	44
5306-01-012-2284	64	12
4720-01-017-5127	163	
4730-01-017-8057	207	8
4730-01-017-8287	254	2
4730-01-017-8287	254	5
4730-01-017-8287	254	8
4730-01-017-8287	254	19
4730-01-017-8287	254	22
4730-01-017-8287	254	24
4730-01-017-8287	254	27
4730-01-017-8287	254	35
4730-01-017-8287	254	42
4730-01-017-9374	192	
4730-01-017-9375	192	
8305-01-018-8743	193	24
9905-01-018-9848	153	2
5305-01-019-2426	111	7
5305-01-019-2426	111	14
5340-01-019-2986	268	11
5305-01-020-5929	15	26
5360-01-020-7063	154	8
2910-01-021-4815	193	27
5930-01-022-2079	12	28
5935-01-022-7744	271	19
4730-01-023-2627	182	35
4730-01-023-2627	182	40
4730-01-023-2627	182	51
4730-01-023-2627	182	56
4730-01-023-2627	182	83
4730-01-023-2627	182	88
4730-01-023-2627	182	101
4730-01-023-2627	182	113
4730-01-023-2627	182	118
5330-01-023-5254	89	17
3810-01-023-8390	19	77
4730-01-024-0908	160	
4730-01-024-1321	182	28
2590-01-024-1539	111	75
5306-01-024-2237	101	12
4730-01-024-2848	147	60
4730-01-024-3921	200	5
5310-01-024-7552	154	12
5325-01-024-9880	111	5
4820-01-025-0340	144	
4730-01-025-0916	158	
4730-01-025-0916	158	
4730-01-025-0916	158	
4730-01-025-0916	158	
4730-01-025-0916	158	
4730-01-025-0916	158	
4730-01-025-0916	158	
4730-01-025-0916	158	
4730-01-025-0916	158	
4730-01-025-0916	158	
4730-01-025-0916	158	
4730-01-025-0916	171	
6685-01-025-4131	133	
5330-01-025-7011	191	41
4730-01-025-7243	182	
4730-01-025-7723	258	62
2540-01-025-7948	131	
5310-01-026-5686	258	68
5310-01-026-5686	260	68
5935-01-026-5869	111	11
2940-01-026-6205	251	
3810-01-026-6519	276	
3810-01-026-7084	276	109
4730-01-026-8720	182	182
4730-01-026-8720	184	
5320-01-027-2038	269	17
4730-01-027-2195	160	36
5310-01-027-3102	276	78
9905-01-027-4610	267	67
5310-01-027-5284	258	64
5310-01-027-5284	260	64
3810-01-027-6650	268	142
2510-01-027-7975	18	7
2540-01-027-9012	272	
5310-01-027-9392	219	20
4730-01-027-9641	168	26
3040-01-027-9692	267	21
5340-01-028-0032	276	97
5340-01-028-0538	276	91
2940-01-028-0606	221	12
9905-01-028-0675	109	46
9905-01-028-0676	109	47
9905-01-028-0678	109	48
9905-01-028-0680	109	49
9905-01-028-0681	109	51
9905-01-028-0683	109	50
9905-01-028-0684	109	52
9905-01-028-0685	109	45
4730-01-028-1583	132	15
4730-01-028-1583	132	21
4730-01-028-1583	132	26
4730-01-028-1583	156	9
4730-01-028-1586	192	8
4720-01-028-1830	136	
4730-01-028-3441	149	23
4730-01-028-3441	149	32
4730-01-028-3442	178	
3040-01-028-3632	118	19
5330-01-028-3637	268	89
3810-01-028-3885	268	33
9905-01-028-4317	268	84
2805-01-028-4567	178	46
5310-01-028-4848	131	14
5330-01-028-4854	268	99
4730-01-028-5038	32	10
4730-01-028-5038	32	15
4720-01-028-5282	184	
4710-01-028-5561	168	31
5330-01-028-5628	221	13
5330-01-028-5744	268	94
5310-01-028-6341	270	34
5310-01-028-6368	270	40
6680-01-028-6373	45	1
2590-01-028-8659	90	12
2590-01-028-8659	93	12
2590-01-028-8661	97	
5305-01-028-8750	133	6
4730-01-028-8804	61	5
3110-01-028-8851	270	
5320-01-028-8859	276	49
5330-01-028-8984	169	3
5310-01-028-9037	270	39
5310-01-028-9042	270	30
5305-01-028-9044	272	14
4730-01-028-9239	270	35
4730-01-028-9596	191	57
4730-01-029-0172	182	160
5305-01-029-0673	270	43
5305-01-029-0674	270	52
5305-01-029-1187	133	1
2530-01-029-3225	90	11
2530-01-029-3225	93	11
4730-01-029-5036	192	15
9905-01-029-5763	23	38
5310-01-029-6269	169	5
5310-01-029-6272	91	39
5315-01-029-6294	267	24
5305-01-029-6826	180	1
5305-01-029-6830	173	1
5305-01-029-6831	15	1
5305-01-029-6832	23	43

STOCK NUMBER	FIGURE NO.	ITEM NO.
5305-01-029-6933	23	46
5305-01-029-6834	91	41
5310-01-029-6843	109	35
5340-01-029-7637	270	51
4730-01-029-7660	163	52
4730-01-029-7765	147	55
4730-01-029-7765	149	5
4710-01-029-7955	168	5
4720-01-029-8659	254	17
4720-01-029-8659	254	23
4720-01-029-8659	254	37
4730-01-029-8677	191	34
4730-01-030-4339	182	
5355-01-030-7552	33	1
5325-01-030-7564	24	4
5325-01-030-7564	38	28
5305-01-030-8710	44	17
5310-01-030-8711	25	18
5307-01-030-8713	25	17
5340-01-030-9050	17	11
5340-01-030-9051	17	
5340-01-030-9051	21	
5340-01-030-9051	21	
5310-01-030-9096	25	11
5310-01-031-0785	267	5
4730-01-031-1077	94	43
5310-01-031-4351	17	46
4730-01-031-9264	32	33
2910-01-031-9265	33	
5310-01-032-0569	40	42
2590-01-032-1346	23	47
2590-01-032-1349	24	1
2590-01-032-1350	24	2
4730-01-032-1351	39	12
2540-01-032-1357	25	9
2540-01-032-1359	25	7
4730-01-032-3699	225	17
9905-01-032-4057	109	42
4730-01-032-4372	229	27
2540-01-032-4654	17	33
2540-01-032-4654	19	26
2540-01-032-4654	21	16
2540-01-032-4654	21	33
2540-01-032-5602	17	
2540-01-032-5602	19	
4730-01-032-5641	32	13
4720-01-033-2096	254	1
5310-01-033-9414	45	3
4720-01-033-9718	254	7
5310-01-035-0869	12	16
2590-01-036-0785	111	209
2540-01-036-4435	12	27
6680-01-036-9039	45	
3930-01-037-1321	118	20
2990-01-037-4985	195	11
2990-01-037-4986	195	5
2590-01-038-1918	24	
5310-01-038-4655	267	6
5310-01-038-4660	270	38
2540-01-039-4726	12	
2990-01-038-8300	195	10
5305-01-038-8495	267	2

STOCK NUMBER	FIGURE NO.	ITEM NO.
5340-01-038-9481	276	55
5340-01-039-0196	243	14
5340-01-039-2279	27	7
5340-01-039-2279	195	8
5315-01-039-4464	267	43
6240-01-039-9522	274	16
6240-01-039-9522	275	16
5305-01-040-2039	25	6
5305-01-040-2039	25	8
5306-01-040-4677	195	4
3810-01-040-5550	276	80
3040-01-040-7283	220	1
6680-01-040-8807	268	109
4730-01-041-2676	254	52
2530-01-041-4698	17	10
4730-01-041-5233	174	40
4730-01-042-5252	182	26
4730-01-042-5252	182	181
4730-01-044-2680	131	2
4820-01-044-5165	169	2
4710-01-044-5212	277	20
5307-01-044-7288	147	54
5307-01-044-7288	149	4
5340-01-044-8390	276	4
9320-01-045-0436	276	71
2990-01-045-3434	195	24
5305-01-045-4157	15	7
5305-01-045-4157	15	11
5305-01-045-4157	271	7
5305-01-045-4157	271	11
5305-01-046-0445	169	7
5306-01-046-0492	23	37
4730-01-046-1288	132	5
4730-01-046-1288	132	10
4730-01-046-1288	132	16
4730-01-046-1288	132	20
4730-01-046-1288	132	27
4730-01-046-1288	136	3
5310-01-046-2031	267	8
5306-01-046-3890	27	6
5306-01-046-3890	195	9
4330-01-046-4642	250	3
4720-01-046-8844	31	4
4720-01-050-5637	191	2
4720-01-050-5637	191	8
4720-01-050-5637	191	29
4730-01-050-6014	160	
4730-01-050-6014	178	
3810-01-052-3935	92	3
5310-01-053-6933	17	26
5310-01-053-6933	17	58
5310-01-053-6933	19	19
5310-01-053-6933	21	9
5310-01-053-6933	21	26
4730-01-053-9707	171	30
4730-01-053-9707	177	16
4730-01-053-9707	182	14
9390-01-055-5202	268	45
4720-01-055-6987	112	2
5310-01-058-3030	57	6
4720-01-058-4929	191	24
2920-01-111-1595	42	

PART NUMBER	FSCM	FIG. NO.	ITEM NO.
AAH00-0349	18265	194	12
AC4-3	10054	9	37
AC4-3	10054	9	47
AGC6	71400	7	25
AJ6-45	72794	89	4
AJ6-50	72794	18	40
AJ6-50	72794	18	43
AJ6-60	72794	20	29
AJ6-60	72794	109	24
AJ6-60	72794	109	33
AJ6-70	72794	109	20
AMA5102UT	19728	219	
AN3-6A	88044	36	15
AN340C5	88044	8	14

PART NUMBER	FSCM	FIG. NO.	ITEM NO.
AN365-1024A	88044	19	37
AN365-1024A	88044	24	7
AN515-8-12	88044	8	6
AN6227-27	81168	184	4
AN6227-27	88044	184	12
AN816-10	88044	174	72
AN816-11	88044	171	29
AN816-12	88044	171	31
AN816-12	88044	177	6
AN816-12	88044	177	27
AN816-12-16	88044	182	152
AN816-14	88044	174	48
AN816-14	88044	178	7

PART NUMBER	FSCM	FIG. NO.	ITEM NO.
AN816-16	88044	168	10
AN816-25	88044	182	24
AN816-3	88044	163	42
AN816-4	88044	182	46
AN816-4	88044	182	48
AN816-4	88044	182	59
AN816-4	88044	182	93
AN816-4	88044	182	107
AN816-4	88044	182	121
AN816-6	88044	182	134
AN818-16	81350	168	
AN818-16	81350	168	
AN818-16	81350	168	
AN818-16	88044	168	12
AN821-20	88044	168	22
AN894-22	88044	168	28
AN912-5	88044	192	7
AN912-5	88044	192	14
AR12707	15434	251	
AR50535	15434	252	
AR9313	15434	224	40
AS0403300SS	15434	229	
A006	82271	166	2
A006	82271	166	11
A010	82271	166	9
A010	82271	166	17
A111	82271	166	4
A111	82271	166	13
A122913	70281	276	
A122983	70281	276	2
A122983-1	70281	276	1
A128902	70281	276	68
A128903	70281	276	
A128905	70281	276	65
A128906	70281	276	
A134003	70281	276	47
A134004	70281	276	46
A134008	70281	276	34
A134020	70281	276	4
A134020-1	70281	276	3
A134025	70281	276	
A134029	70281	276	33
A134030	70281	276	30
A134034	70281	276	29
A134035	70281	276	13
A134104	70281	276	61
A134105	70281	276	
A134107	70281	276	
A140700	70281	276	
A140704	70281	276	80
A140706	70281	276	
A14132	00736	89	18
A14132	00736	152	1
A14132	00736	156	1
A1461G	61208	40	64
A15578	61208	40	65
A1663	61208	40	
A1978	55469	33	15
A1980	34199	33	9
A1981	34199	33	12
A1982	34199	33	14
A1985	34199	33	13
A1986	55469	33	18
A1987	55469	33	19
A21256	41625	36	2
A22TT	01029	182	166
A25319-1	41625	36	12
A31029	41625	36	20
A31039	41625	36	14
A31509	41625	36	17
A31509	41625	37	25
A31538	41625	36	16
A32010	41625	36	31
A32660	41625	36	23
A33395	41625	36	33
A3361	61208	40	49
A35232-4	41625	36	10
A35297	41625	36	11
A35777	41625	36	32
A41640	41625	36	8
A4190	55469	33	1
A45202	41625	37	12
A45202	41625	37	23
A4941	55469	33	
A570	34199	33	10
A572	55469	33	16
A574A	55469	33	17
A589	55469	33	8
A6-2202	46429	26	27
A7755	55469	33	
A8679	34199	33	11
A8683	34199	33	3
A9340	34199	33	
A9341	34199	33	4
A9345	34199	33	2
A9346	34199	33	
A9347	34199	33	
A9480	34199	33	7
A9481	34199	33	6
A9482	34199	33	5
BC6340	98440	34	14
BC6340	98440	34	18
BD721011-16	01843	12	10
BK16-16NJ45T	30327	184	6
B29498	41625	36	19
B38104	41625	36	18
B43267A2	41625	37	15
B43267A4	41625	30	4
B43310A1	41625	23	18
B43310A1	41625	23	24
B43310A1	41625	23	29
B44343A8	41625	37	4
CC1613	75272	22	4
CD1613	75272	22	3
CH33PLMIL	73370	251	3
COV1713	75272	37	3
CP8	66295	28	1
CW3-44	27315	2	5
CW3-44	91825	11	23
COV0509	70281	276	55
C111	49267	88	6
C13215E7647-3	97403	182	
C2-815S46REF	48084	168	11
C23P	66295	23	10
C2494	78947	274	14
C2494	78947	275	14
C30584-3816	78553	31	6
C3109X6X2	79470	200	4
C3409X4	79470	32	26
C439A	78947	274	19
C4392	78947	274	15
C4392	78947	275	15
C4394	78947	275	19
C4395	78947	274	8
C4395	78947	275	8
C4396	78947	274	4
C4396	78947	275	4
C4397	78947	274	3
C4397	78947	275	3
C4400	78947	274	12
C4400	78947	275	12
C4402	78947	274	7
C4402	78947	275	7
C4496	78947	274	16
C4496	78947	275	16
C48F	66295	23	12
C5015X12X8	79470	160	11
C5015X12X8	79470	160	48
C5015X8X6	79470	182	12
C5105X8	79470	182	11
C5205X6X2	79470	82	40
C5205X6X2	79470	82	50
C5305X14	79470	254	44
C5405X6	79470	92	2
C5405X6	79470	94	47
C5405X6X2	79470	82	41
C542X6	79470	82	48
C5515X6	79470	182	2
C5707X8	79470	174	17

PART NUMBER	FSCM	FIG. NO.	ITEM NO.
C64P	66295	23	2
C7924X8	79470	174	15
C7924X8	79470	177	38
DT8P1-06-30-1051	62983	177	8
DT8P1-06-30-105198	62983	172	
D202-95-0D	01606	133	
D202-95-0D1	01606	133	1
D202-95-0D2	01606	133	2
D202-95-0D3	01606	133	4
D202-95-0D4	01606	133	5
D202-95-0D5	01606	133	9
D202-95-0D6	01606	133	7
D202-95-0D7	01606	133	6
D202-95-0D8	01606	133	8
D202-95-0D9	01606	133	3
D21572-5	41625	36	13
D23298FPD	60703	131	
D31030-4	41625	36	7
D32634	41625	36	22
D403	91561	121	2
D403	91561	122	2
D404	91561	120	4
D404	91561	121	1
D404	91561	122	1
D43142-2	41625	37	26
D44660	41625	36	
ES507CA	57733	34	7
ES6618R	75833	34	19
FC11040	63477	103	23
FC11126B	63477	86	33
FC11126B	63477	87	31
FC11410	63477	90	25
FC11410	63477	91	26
FC11410	63477	93	25
FC11410	63477	95	16
FC11410	63477	96	16
FC11410	63477	102	20
FC11410	63477	103	25
FC11449	63477	103	24
FC1243	63477	82	54
FC1243	63477	84	4
FC1311	63477	103	21
FC16784	63477	90	23
FC16784	63477	91	23
FC16784	63477	93	23
FC16784	63477	95	14
FC16784	63477	96	14
FC16784	63477	102	24
FC2577	63477	97	36
FC2915-04045	00624	32	33
FC2952	63477	84	3
FC3163G	63477	86	39
FC3163G	63477	87	43
FC31720	63477	90	24
FC31720	63477	91	24
FC31720	63477	93	24
FC31720	63477	95	15
FC31720	63477	96	15
FC31720	63477	102	25
FC3208A	63477	97	6
FC3511	63477	82	53
FC4325	63477	82	36
FC48703A	63477	86	30
FC48726	63477	103	22
FC48736	63477	90	22
FC48736	63477	91	22
FC48736	63477	93	22
FC48736	63477	95	13
FC48736	63477	96	13
FC48736	63477	102	23
FC57802	63477	93	21
FC57802	63477	102	22
FC5908	63477	86	31
FC5908	63477	87	40
FC5916C	63477	86	27
FC5916C	63477	87	36
FC5917B	63477	86	26
FC5917B	63477	87	35
FC5918K	63477	86	24
FC5918K	63477	86	25
FC5918K	63477	87	33
FC5921J	63477	87	34
FC603	63477	82	52
FC673P	63477	86	41
FC673P	63477	87	41
FC6858K	63477	97	7
FC7840	63477	82	51
FC967A	63477	90	20
FC967A	63477	91	20
FC967A	63477	93	20
FC967A	63477	95	11
FC967A	63477	96	11
FC967A	63477	102	21
FC970	63477	95	20
FC970	63477	96	20
FC975E	63477	90	21
FC975E	63477	91	21
FC975E	63477	95	12
FC975E	63477	96	12
FD1237F	63477	97	4
FD368	63477	103	20
FD48702A	63477	87	39
FD48703	63477	86	28
FD48703	63477	87	38
FD6917C	63477	86	37
FD6917C	63477	87	45
FE22565	63477	90	26
FE22565	63477	91	25
FE22565	63477	93	26
FE22565	63477	95	17
FE22565	63477	96	17
FE22565	63477	102	26
FE3072	63477	103	26
FFW92	81348	45	9
FG12-7200	18265	31	
FWG12-0077	18265	194	
F1043-5	60703	131	17
F107-1-4	90480	156	47
F107-3-8	90480	147	23
F107-3-8	90480	149	
F113-1-4X1-8	90480	147	41
F1372-16	60703	131	28
F1386-1J	60703	131	27
F1390-16	60703	131	
F1526-3	60703	131	23
F1820CU2	73370	252	
F422	60703	131	22
F422	60703	131	26
F423	60703	131	25
F424-56	60703	131	21
F6340-2	98440	34	
F940-2	60703	131	29
F942-6	60703	131	7
GAH00-0165	18265	194	13
GA721006	01843	12	14
GE5	09214	273	14
GE5	09214	273	18
GP6	72794		
GP6	72794	18	41
GP6	72794	20	30
GP6	72794	89	5
GP6	72794	109	21
GP6	72794	109	25
GP6	72794	109	34
G013618	46529	28	28
G059387	46529	26	38
G1053	79497	3	13
G1131	79497	24	4
G1131	79497	38	28
G320205	46529	26	26
HTC319	75272	82	4
HT108	99103	28	8
I-777-A2	80625	224	25
IA287H	70281	276	23
J142P138	04582	13	25
KT721065	01843	12	
K2405-1-8B6	55469	33	
LE721125A1	01843	12	20
LE721139-20	01843	12	12
LH76LC15GD1	27315	273	

PART NUMBER	FSCM	FIG. NO.	ITEM NO.
LH76LC15RD1	27315	273	
LK721014	01843	12	22
LN402-12-40MGR	13548	131	
LN402-12/40MGR	13548	122	
LN402-22	13548	113	47
LP1268	61112	185	19
LP2284	61112	185	15
LP2287	61112	185	16
LP2288	61112	185	11
LP2289	61112	185	12
LP2290	61112	185	13
LP2299	61112	185	
LP2299-1299-1	61112	30	11
LP2377-10	61112	185	9
LP2401	61112	185	18
LP2773-11	61112	30	7
LP2814	61112	30	9
LP2814	61112	185	
LP3222-9	61112	30	10
LP3234-9	61112	185	
LP3239-48	61112	30	6
LP3258-1	61112	185	22
LP3864R84	61112	185	
LP3904-1	61112	185	14
LP4667-10	61112	185	5
LP4668-10	61112	185	4
LP482-1	61112	30	8
LP529	61112	185	6
MD45904-69	96906	268	126
MEC404-2500	92863	188	1
MIL-H-52471/5-16	81349	184	7
MIL-H-52544	81349	178	13
MILC13468/1-5	81349	13	45
MILC3432	81349	13	41
MILT55164-3STB10	81349	111	213
MS12285-1-4	96906	26	1
MS15001-1	96906	39	8
MS15001-1	96906	278	1
MS15003-1	96906	2	3
MS15003-1	96906	9	29
MS15003-1	96906	9	41
MS15003-1	96906	11	19
MS15003-1	96906	85	
MS15003-1	96906	85	
MS15003-1	96906	85	3
MS15003-1	96906	87	13
MS15003-1	96906	89	24
MS15003-1	96906	92	1
MS15003-1	96906	92	23
MS15003-1	96906	94	1
MS15003-1	96906	94	20
MS15003-1	96906	97	33
MS15003-1	96906	98	21
MS15003-1	96906	99	1
MS15003-1	96906	104	27
MS15003-1	96906	107	4
MS15003-1	96906	108	1
MS15003-1	96906	118	43
MS15003-1	96906	126	24
MS15003-1	96906	126	28
MS15003-1	96906	196	5
MS15003-2	96906	98	7
MS15003-4	96906	101	9
MS15003-6	96906	11	12
MS15003-6	96906	40	41
MS15006-1	96906	254	63
MS15570-3038	96906	13	5
MS15795-820	96906	44	2
MS16535-114	96906	35	2
MS17165-4578	96906	15	4
MS17165-4578	96906	271	4
MS18154-59	96906	178	44
MS18154-60	96906	12	4
MS18154-60	96906	18	18
MS18154-60	96906	18	30
MS18154-60	96906	18	34
MS18154-60	96906	19	6
MS18154-60	96906	19	11
MS18154-60	96906	19	28
MS18154-60	96906	19	62
MS18154-60	96906	19	73
MS18154-60	96906	20	1
MS18154-60	96906	20	9
MS18154-60	96906	20	23

PART NUMBER	FSCM	FIG. NO.	ITEM NO.
MS18154-60	96906	21	1
MS18154-60	96906	21	35
MS18154-60	96906	21	40
MS18154-60	96906	21	47
MS18154-60	96906	26	13
MS18154-60	96906	30	13
MS18154-60	96906	32	1
MS18154-60	96906	47	1
MS18154-60	96906	53	1
MS18154-60	96906	91	31
MS18154-60	96906	97	15
MS18154-60	96906	152	36
MS18154-60	96906	171	38
MS18154-60	96906	192	21
MS18154-60	96906	194	3
MS18154-60	96906	194	9
MS18154-60	96906	219	6
MS18154-60	96906	252	19
MS18154-60	96906	267	27
MS18154-60	96906	267	31
MS18154-60	96906	277	23
MS19059-12	96906	166	7
MS20392-10CP3	96906	163	12
MS20392-4C21	96906	267	20
MS20392-4C21	96906	267	23
MS20392-5C29	96906	163	46
MS20819-20	96906	168	
MS20819-20	96906	168	
MS20819-20	96906	168	
MS20822-12-16	96906	182	156
MS20822-12-16	96906	182	158
MS20822-12-16	96906	182	171
MS20822-16	96906	182	142
MS20822-4	96906	182	80
MS20822-4	96906	182	91
MS20822-4-48	96906	192	6
MS20822-6	96906	182	78
MS20822-6	96906	182	123
MS20822-7	96906	163	43
MS20822-8	96906	177	4
MS20823-12	96906	182	164
MS20823-16	96906	182	147
MS20823-8	96906	177	22
MS20913-6S	96906	89	21
MS21044-N4	96906	117	2
MS21044-12	96906	277	19
MS21044N08	96906	267	4
MS21044N5	96906	267	3
MS21083N22	96906	254	47
MS21083N5	96906	25	12
MS21313-32	96906	19	
MS21313-32	96906	19	49
MS21318-14	96906	186	21
MS21318-14	96906	277	1
MS21318-20	96906	268	51
MS21318-20	96906	268	63
MS21318-20	96906	268	79
MS21318-20	96906	268	81
MS21318-20	96906	268	116
MS21318-20	96906	268	118
MS21318-20	96906	268	136
MS21318-20	96906	277	46
MS21318-20	96906	277	48
MS21333-102	96906	171	23
MS21333-102	96906	171	26
MS21333-102	96906	174	58
MS21333-102	96906	174	63
MS21333-104	96906	140	29
MS21333-105	96906	111	38
MS21333-105	96906	178	56
MS21333-105	96906	254	55
MS21333-2	96906	178	65
MS21333-59	96906	32	7
MS21333-65	96906	111	203
MS21333-66	96906	185	23
MS21333-67	96906	156	35
MS21333-69	96906	132	38
MS21333-69	96906	147	8
MS21333-69	96906	149	26
MS21333-69	96906	149	51
MS21333-69	96906	156	34
MS21333-71	96906	158	5
MS21333-71	96906	158	48
MS21333-71	96906	160	44

STOCK NUMBER		FIGURE NO.	ITEM NO.
MS21333-71	96906	171	22
MS21333-71	96906	174	34
MS21333-71	96906	177	44
MS21333-71	96906	178	50
MS21333-75	96906	111	35
MS21333-75	96906	152	5
MS21333-75	96906	152	6
MS21333-75	96906	156	5
MS21333-76	96906	156	6
MS21333-96	96906	185	24
MS21334-31	96906	111	28
MS21334-31	96906	111	97
MS21334-32	96906	111	27
MS21334-32	96906	132	3
MS21334-34	96906	120	10
MS21334-34	96906	121	7
MS21334-34	96906	122	7
MS21334-7	96906	268	11
MS21920-37	96906	31	1
MS21920-49	96906	194	1
MS2418701	96906	24	8
MS24532-2	96906	38	16
MS24532-2	96906	273	27
MS24537-1	96906	26	2
MS24540-2	96906	273	25
MS24541-2	96906	38	17
MS24542-2	96906	38	14

PART NUMBER	FSCM	FIG. NO.	ITEM NO.
MS24542-2	96906	273	26
MS24543-2	96906	38	19
MS24544-2	96906	38	18
MS24621-16	96906	268	130
MS24627-51	96906	271	1
MS24665-134	96906	118	12
MS24665-238	96906	267	15
MS24665-238	96906	267	19
MS24665-238	96906	267	22
MS24665-238	96906	267	47
MS24665-281	96906	36	21
MS24665-281	96906	149	40
MS24665-283	96906	17	27
MS24665-283	96906	17	59
MS24665-283	96906	19	20
MS24665-283	96906	21	10
MS24665-283	96906	21	27
MS24665-283	96906	37	17
MS24665-283	96906	91	8
MS24665-283	96906	95	19
MS24665-283	96906	96	19
MS24665-283	96906	163	45
MS24665-291	96906	17	23
MS24665-291	96906	17	55
MS24665-291	96906	19	16
MS24665-291	96906	19	51
MS24665-291	96906	21	6
MS24665-291	96906	21	23
MS24665-304	96906	163	11
MS24665-349	96906	8	4
MS24665-349	96906	276	100
MS24665-351	96906	87	6
MS24665-353	96906	86	1
MS24665-353	96906	88	2
MS24665-353	96906	91	27
MS24665-357	96906	254	50
MS24665-360	96906	278	2
MS24665-419	96906	90	6
MS24665-423	96906	91	11
MS24665-493	96906	86	9
MS24665-493	96906	87	19
MS24665-495	96906	91	34
MS24665-623	96906	88	8
MS24665-623	96906	88	12
MS24665-624	96906	11	3
MS24665-625	96906	9	4
MS24665-626	96906	11	24
MS24665-628	96906	254	49
MS24665-686	96906	86	8
MS24665-686	96906	87	3
MS24665-687	96906	109	16
MS24665-752	96906	9	32
MS24665-752	96906	11	1
MS24665-752	96906	11	17
MS24665-753	96906	103	4
MS24665-767	96906	9	1
MS24665-768	96906	10	1
MS24665-904	96906	2	1
MS24665-904	96906	11	20
MS25036-53	96906	13	44
MS25043-16D	96906	111	47
MS25183-16-109	96906	111	73
MS25183-18-85	96906	111	71
MS25231-313	96906	38	5
MS2525/17-20	81343	184	
MS25251-12	96906	111	45
MS25251-12	96906	111	51
MS25251-12	96906	111	60
MS25251-12	96906	111	166
MS25251-16	96906	111	196
MS26465-689	96906	278	13
MS27040-8	96906	160	43
MS27040-8	96906	171	19
MS27040-8	96906	177	43
MS27040-9	96906	174	56
MS27142-2	96906	13	43
MS27142-2	96906	111	63
MS27142-2	96906	111	78
MS27142-2	96906	111	198
MS27142-2	96906	111	207
MS27142-3	96906	111	72

PART NUMBER	FSCM	FIG. NO.	ITEM NO.
MS27144-1	96906	111	12
MS27144-1	96906	111	20
MS27144-1	96906	111	42
MS27144-1	96906	111	62
MS27144-1	96906	111	77
MS27144-1	96906	111	81
MS27144-1	96906	111	197
MS27144-1	96906	111	208
MS27144-1	96906	111	210
MS27144-1	96906	111	212
MS27144-1	96906	111	218
MS27144-1	96906	111	220
MS27144-1	96906	271	6
MS27144-1	96906	273	16
MS27144-1	96906	273	20
MS27144-2	96906	111	200
MS27144-3	96906	111	82
MS27145-1	96906	111	199
MS27152-1	96906	132	51
MS27183-10	96906	26	25
MS27183-10	96906	111	124
MS27183-10	96906	117	3
MS27183-10	96906	267	62
MS27183-12	96906	23	40
MS27183-12	96906	23	49
MS27183-13	96906	20	35
MS27183-13	96906	103	3
MS27183-13	96906	109	2
MS27183-13	96906	117	5
MS27183-13	96906	117	11
MS27183-13	96906	163	47
MS27183-13	96906	199	21
MS27183-13	96906	268	123
MS27183-13	96906	268	128
MS27183-13	96906	268	141
MS27183-13	96906	277	6
MS27183-13	96906	277	25
MS27183-14	96906	26	9
MS27183-14	96906	45	2
MS27183-14	96906	49	17
MS27183-15	96906	111	126
MS27183-15	96906	276	85
MS27183-17	96906	87	7
MS27183-17	96906	88	16
MS27183-17	96906	88	20
MS27183-17	96906	90	7
MS27183-17	96906	102	9
MS27183-18	96906	34	2
MS27183-20	96906	37	18
MS27183-21	96906	91	13
MS27183-26	96906	103	30
MS27183-27	96906	88	9
MS27183-27	96906	88	13
MS27183-27	96906	88	34
MS27183-35	96906	9	33
MS27183-4	96906	49	6
MS27183-42	96906	38	21
MS27183-9	96906	112	6
MS27183-9	96906	147	19
MS27183-9	96906	163	55
MS27183-9	96906	193	10
MS27183-9	96906	276	98
MS27200-1	96906	35	11
MS27200-1	96906	111	90
MS28775-115	96906	120	7
MS28775-115	96906	121	4
MS28775-237	96906	178	28
MS28775-246	96906	186	20
MS28778-10	96906	160	15
MS28778-10	96906	160	37
MS28778-10	96906	160	52
MS28778-10	96906	168	29
MS28778-10	96906	177	3
MS28778-10	96906	177	19
MS28778-10	96906	177	31
MS28778-10	96906	178	8
MS28778-10	96906	178	63
MS28778-12	96906	160	21
MS28778-12	96906	174	44
MS28778-12	96906	174	47

PART NUMBER	FSCM	FIG. NO.	ITEM NO.
MS28778-12	96906	174	49
MS28778-12	96906	178	2
MS28778-12	96906	178	68
MS28778-16	96906	168	15
MS28778-16	96906	168	19
MS28778-16	96906	171	4
MS28778-16	96906	182	145
MS28778-16	96906	182	177
MS28778-20	96906	168	27
MS28778-20	96906	174	51
MS28778-20	96906	178	16
MS28778-20	96906	182	150
MS28778-20	96906	182	179
MS28778-232	96906	178	20
MS28778-4	96906	182	29
MS28778-6	96906	160	2
MS28778-6	96906	163	34
MS28778-6	96906	163	53
MS28778-6	96906	171	11
MS28778-6	96906	182	3
MS28778-6	96906	182	5
MS28778-6	96906	182	8
MS28778-6	96906	182	62
MS28778-6	96906	182	110
MS28778-6	96906	182	136
MS28778-6-5	96906	254	38
MS28778-8	96906	158	3
MS28778-8	96906	158	12
MS28778-8	96906	158	33
MS28778-8	96906	158	41
MS28778-8	96906	158	46
MS28778-8	96906	158	67
MS28778-8	96906	158	71
MS28778-8	96906	160	9
MS28778-8	96906	160	26
MS28778-8	96906	160	32
MS28778-8	96906	174	6
MS28778-8	96906	174	23
MS28778-8	96906	254	3
MS28778-8	96906	254	6
MS28778-8	96906	254	9
MS28778-8	96906	254	11
MS28778-8	96906	254	20
MS28778-8	96906	254	25
MS28778-8	96906	254	28
MS28778-8	96906	254	36
MS28778-8	96906	254	39
MS28778-8	96906	254	43
MS28778-8	96906	254	46
MS3057-8	96906	13	40
MS3106E16-11SX	96906	15	19
MS3106E16-11SX	96906	271	19
MS35058-27	96906	111	221
MS3516-1-1	96906	38	24
MS35190-274	96906	36	4
MS35206-215	96906	24	9
MS35206-218	96906	268	42
MS35206-224	96906	267	66
MS35206-226	96906	36	1
MS35206-226	96906	38	22
MS35206-229	96906	24	13
MS35206-230	96906	38	6
MS35206-230	96906	111	21
MS35206-230	96906	111	29
MS35206-230	96906	111	143
MS35206-230	96906	111	216
MS35206-241	96906	109	43
MS35206-241	96906	273	43
MS35206-242	96906	113	44
MS35206-242	96906	116	7
MS35206-243	96906	37	5
MS35206-243	96906	88	43
MS35206-243	96906	116	8
MS35206-245	96906	111	55
MS35206-245	96906	111	136
MS35206-247	96906	268	102
MS35206-248	96906	45	4
MS35206-252	96906	273	11
MS35206-261	96906	24	3
MS35206-262	96906	147	6

PART NUMBER	FSCM	FIG. NO.	ITEM NO.
MS35206-262	96906	149	24
MS35206-262	96906	149	49
MS35206-262	96906	152	4
MS35206-262	96906	153	1
MS35206-262	96906	156	4
MS35206-265	96906	111	33
MS35206-265	96906	113	29
MS35206-265	96906	156	31
MS35206-265	96906	268	108
MS35206-266	96906	19	36
MS35206-266	96906	113	20
MS35206-266	96906	113	53
MS35206-269	96906	171	21
MS35206-269	96906	174	57
MS35206-277	96906	269	5
MS35206-277	96906	269	9
MS35206-277	96906	273	21
MS35206-279	96906	121	15
MS35206-279	96906	122	15
MS35206-283	96906	12	8
MS35206-283	96906	276	88
MS35206-300	96906	31	18
MS35206-307	96906	121	9
MS35206-307	96906	122	9
MS35206-309	96906	36	25
MS35206-31	96906	38	23
MS35206-311	96906	12	1
MS35206-311	96906	109	1
MS35206-312	96906	276	94
MS35206-313	96906	268	134
MS35206-354	96906	158	42
MS35207-230	96906	8	12
MS35207-260	96906	12	23
MS35207-263	96906	23	17
MS35207-263	96906	23	23
MS35207-263	96906	23	28
MS35207-263	96906	36	3
MS35207-263	96906	120	8
MS35207-263	96906	121	5
MS35207-263	96906	122	5
MS35207-263	96906	193	13
MS35207-263	96906	268	39
MS35207-263	96906	273	1
MS35207-264	96906	19	56
MS35207-265	96906	36	28
MS35207-265	96906	37	9
MS35207-265	96906	37	20
MS35207-265	96906	182	42
MS35207-265	96906	182	73
MS35207-265	96906	182	102
MS35207-265	96906	193	3
MS35207-288	96906	97	24
MS35207-288	96906	97	29
MS35215-25	96906	113	32
MS35215-25	96906	113	38
MS35245-18	96906	35	12
MS35265-79	96906	276	60
MS35309-358	96906	111	121
MS35333-38	96906	269	13
MS35333-40	96906	132	59
MS35333-41	96906	269	2
MS35334-21	96906	113	4
MS35335-33	96906	269	6
MS35335-33	96906	269	10
MS35335-34	96906	111	170
MS35335-34	96906	276	10
MS35338-10	96906	219	3
MS35338-27	96906	186	18
MS35338-40	96906	24	10
MS35338-40	96906	268	55
MS35338-41	96906	8	13
MS35338-41	96906	24	14
MS35338-41	96906	111	22
MS35338-41	96906	111	30
MS35338-41	96906	111	93
MS35338-41	96906	111	114
MS35338-41	96906	111	144
MS35338-41	96906	111	187
MS35338-41	96906	111	215

PART NUMBER	FSCM	FIG. NO.	ITEM NO.
MS35338-42	96906	8	7
MS35338-42	96906	37	6
MS35338-42	96906	45	5
MS35338-42	96906	88	45
MS35338-42	96906	111	56
MS35338-42	96906	111	137
MS35338-42	96906	113	45
MS35338-42	96906	268	101
MS35338-42	96906	273	10
MS35338-42	96906	273	44
MS35338-43	27315	178	49
MS35338-43	96906	13	2
MS35338-43	96906	13	11
MS35338-43	96906	19	45
MS35338-43	96906	19	57
MS35338-43	96906	35	5
MS35338-43	96906	36	5
MS35338-43	96906	36	29
MS35338-43	96906	37	10
MS35338-43	96906	37	21
MS35338-43	96906	88	31
MS35338-43	96906	111	26
MS35338-43	96906	111	34
MS35338-43	96906	111	96
MS35338-43	96906	113	28
MS35338-43	96906	113	51
MS35338-43	96906	113	54
MS35338-43	96906	120	9
MS35338-43	96906	121	6
MS35338-43	96906	122	6
MS35338-43	96906	147	7
MS35338-43	96906	149	25
MS35338-43	96906	149	49
MS35338-43	96906	156	32
MS35338-43	96906	158	7
MS35338-43	96906	158	50
MS35338-43	96906	160	42
MS35338-43	96906	171	20
MS35338-43	96906	174	33
MS35338-43	96906	177	42
MS35338-43	96906	182	43
MS35338-43	96906	182	74
MS35338-43	96906	182	103
MS35338-43	96906	193	4
MS35338-43	96906	193	14
MS35338-43	96906	268	86
MS35338-43	96906	268	91
MS35338-43	96906	268	96
MS35338-43	96906	268	105
MS35338-43	96906	268	107
MS35338-44	96906	8	2
MS35338-44	96906	12	9
MS35338-44	96906	12	30
MS35338-44	96906	14	2
MS35338-44	96906	16	2
MS35338-44	96906	16	7
MS35338-44	96906	17	15
MS35338-44	96906	17	32
MS35338-44	96906	17	64
MS35338-44	96906	18	25
MS35338-44	96906	19	25
MS35338-44	96906	19	54
MS35338-44	96906	21	15
MS35338-44	96906	21	32
MS35338-44	96906	23	32
MS35338-44	96906	24	18
MS35338-44	96906	26	24
MS35338-44	96906	27	5
MS35338-44	96906	30	2
MS35338-44	96906	35	9
MS35338-44	96906	82	2
MS35338-44	96906	82	22
MS35338-44	96906	91	3
MS35338-44	96906	97	25
MS35338-44	96906	97	30
MS35338-44	96906	111	2
MS35338-44	96906	111	37
MS35338-44	96906	111	84
MS35338-44	96906	111	88
MS35338-44	96906	111	123
MS35338-44	96906	112	5
MS35338-44	96906	113	9
MS35338-44	96906	113	13
MS35338-44	96906	113	16
MS35338-44	96906	115	9
MS35338-44	96906	121	16
MS35338-44	96906	122	16
MS35338-44	96906	140	2
MS35338-44	96906	140	14
MS35338-44	96906	140	22
MS35338-44	96906	147	18
MS35338-44	96906	149	17
MS35338-44	96906	149	37
MS35338-44	96906	152	18
MS35338-44	96906	154	7
MS35338-44	96906	156	22
MS35338-44	96906	163	38
MS35338-44	96906	163	50
MS35338-44	96906	163	56
MS35338-44	96906	171	25
MS35338-44	96906	174	62
MS35338-44	96906	178	35
MS35338-44	96906	178	55
MS35338-44	96906	178	72
MS35338-44	96906	182	37
MS35338-44	96906	182	53
MS35338-44	96906	182	69
MS35338-44	96906	182	85
MS35338-44	96906	182	98
MS35338-44	96906	182	115
MS35338-44	96906	182	128
MS35338-44	96906	182	138
MS35338-44	96906	185	2
MS35338-44	96906	186	9
MS35338-44	96906	191	5
MS35338-44	96906	191	21
MS35338-44	96906	191	26
MS35338-44	96906	193	9
MS35338-44	96906	193	18
MS35338-44	96906	195	7
MS35338-44	96906	195	13
MS35338-44	96906	195	17
MS35338-44	96906	195	19
MS35338-44	96906	254	54
MS35338-44	96906	267	51
MS35338-44	96906	267	55
MS35338-44	96906	267	63
MS35338-44	96906	268	5
MS35338-44	96906	268	8
MS35338-44	96906	268	13
MS35338-44	96906	268	22
MS35338-44	96906	268	25
MS35338-44	96906	268	28
MS35338-44	96906	272	2
MS35338-44	96906	272	4
MS35338-44	96906	272	6
MS35338-44	96906	273	58
MS35338-44	96906	273	61
MS35338-44	96906	276	89
MS35338-45	96906	23	34
MS35338-45	96906	23	41
MS35338-45	96906	25	5
MS35338-45	96906	31	10
MS35338-45	96906	60	6
MS35338-45	96906	61	4
MS35338-45	96906	63	2
MS35338-45	96906	64	13
MS35338-45	96906	64	17
MS35338-45	96906	84	2
MS35338-45	96906	103	16
MS35338-45	96906	111	169
MS35338-45	96906	147	37
MS35338-45	96906	147	59
MS35338-45	96906	158	43
MS35338-45	96906	160	39
MS35338-45	96906	161	2
MS35338-45	96906	177	33
MS35338-45	96906	195	2
MS35338-45	96906	219	15
MS35338-45	96906	254	31

PART NUMBER	FSCM	FIG. NO.	ITEM NO.	PART NUMBER	FSCM	FIG. NO.	ITEM NO.
MS35338-45	96906	268	2	MS35338-46	96906	194	4
MS35338-45	96906	268	35	MS35338-46	96906	194	10
MS35338-46	96906	8	20	MS35338-46	96906	199	18
MS35338-46	96906	12	2	MS35338-46	96906	199	20
MS35338-46	96906	12	5	MS35338-46	96906	219	8
MS35338-46	96906	15	27	MS35338-46	96906	221	5
MS35338-46	96906	17	3	MS35338-46	96906	224	6
MS35338-46	96906	17	20	MS35338-46	96906	224	14
MS35338-46	96906	17	36	MS35338-46	96906	224	29
MS35338-46	96906	17	42	MS35338-46	96906	224	35
MS35338-46	96906	17	47	MS35338-46	96906	229	6
MS35338-46	96906	17	52	MS35338-46	96906	253	4
MS35338-46	96906	18	19	MS35338-46	96906	267	10
MS35338-46	96906	18	31	MS35338-46	96906	267	28
MS35338-46	96906	18	35	MS35338-46	96906	267	32
MS35338-46	96906	19	7	MS35338-46	96906	267	37
MS35338-46	96906	19	12	MS35338-46	96906	268	16
MS35338-46	96906	19	29	MS35338-46	96906	268	19
MS35338-46	96906	19	63	MS35338-46	96906	268	114
MS35338-46	96906	19	74	MS35338-46	96906	268	133
MS35338-46	96906	20	2	MS35338-46	96906	271	27
MS35338-46	96906	20	10	MS35338-46	96906	276	95
MS35338-46	96906	20	34	MS35338-46	96906	277	7
MS35338-46	96906	20	41	MS35338-46	96906	277	24
MS35338-46	96906	21	2	MS35338-47	96906	32	42
MS35338-46	96906	21	19	MS35338-47	96906	43	3
MS35338-46	96906	21	36	MS35338-47	96906	84	13
MS35338-46	96906	21	41	MS35338-47	96906	103	18
MS35338-46	96906	21	45	MS35338-47	96906	168	33
MS35338-46	96906	22	2	MS35338-47	96906	182	173
MS35338-46	96906	26	14	MS35338-47	96906	184	2
MS35338-46	96906	27	2	MS35338-47	96906	191	39
MS35338-46	96906	27	9	MS35338-47	96906	193	21
MS35338-46	96906	27	13	MS35338-47	96906	219	18
MS35338-46	96906	28	6	MS35338-48	96906	2	8
MS35338-46	96906	30	14	MS35338-48	96906	11	6
MS35338-46	96906	32	5	MS35338-48	96906	23	20
MS35338-46	96906	32	36	MS35338-48	96906	23	44
MS35338-46	96906	32	39	MS35338-48	96906	25	1
MS35338-46	96906	35	13	MS35338-48	96906	26	19
MS35338-46	96906	35	18	MS35338-48	96906	40	2
MS35338-46	96906	37	2	MS35338-48	96906	81	2
MS35338-46	96906	47	2	MS35338-48	96906	88	27
MS35338-46	96906	49	5	MS35338-48	96906	88	39
MS35338-46	96906	49	9	MS35338-48	96906	90	14
MS35338-46	96906	49	26	MS35338-48	96906	90	18
MS35338-46	96906	49	30	MS35338-48	96906	90	35
MS35338-46	96906	57	4	MS35338-48	96906	91	18
MS35338-46	96906	63	11	MS35338-48	96906	93	14
MS35338-46	96906	63	15	MS35338-48	96906	93	18
MS35338-46	96906	64	2	MS35338-48	96906	93	35
MS35338-46	96906	64	7	MS35338-48	96906	95	9
MS35338-46	96906	65	10	MS35338-48	96906	96	9
MS35338-46	96906	72	2	MS35338-48	96906	97	2
MS35338-46	96906	82	14	MS35338-48	96906	97	40
MS35338-46	96906	85	27	MS35338-48	96906	102	14
MS35338-46	96906	86	21	MS35338-48	96906	102	18
MS35338-46	96906	87	25	MS35338-48	96906	111	191
MS35338-46	96906	89	8	MS35338-48	96906	156	15
MS35338-46	96906	89	12	MS35338-48	96906	168	35
MS35338-46	96906	89	16	MS35338-48	96906	178	19
MS35338-46	96906	91	32	MS35338-48	96906	186	4
MS35338-46	96906	103	2	MS35338-48	96906	189	57
MS35338-46	96906	109	14	MS35338-48	96906	276	86
MS35338-46	96906	117	6	MS35338-48	96906	277	18
MS35338-46	96906	117	10	MS35338-48	96906	277	44
MS35338-46	96906	120	2	MS35338-50	96906	9	12
MS35338-46	96906	121	10	MS35338-50	96906	13	15
MS35338-46	96906	122	10	MS35338-50	96906	109	5
MS35338-46	96906	145	10	MS35338-50	96906	109	27
MS35338-46	96906	152	37	MS35338-50	96906	109	30
MS35338-46	96906	158	25	MS35338-50	96906	113	71
MS35338-46	96906	168	21	MS35338-50	96906	113	74
MS35338-46	96906	171	39	MS35338-50	96906	124	2
MS35338-46	96906	174	69	MS35338-50	96906	178	27
MS35338-46	96906	177	26	MS35338-50	96906	193	2
MS35338-46	96906	178	43	MS35338-50	96906	254	61
MS35338-46	96906	178	70	MS35338-50	96906	277	16
MS35338-46	96906	184	10	MS35338-51	96906	9	9
MS35338-46	96906	192	22	MS35338-51	96906	9	23

PART NUMBER	FSCM	FIG. NO.	ITEM NO.
MS35338-51	96906	9	45
MS35338-51	96906	254	59
MS35338-52	96906	184	17
MS35338-53	96906	9	17
MS35338-53	96906	10	7
MS35338-55	96906	156	54
MS35340-39	96906	113	18
MS35340-45	96906	148	11
MS35340-50	96906	120	13
MS35340-50	96906	121	20
MS35340-50	96906	122	20
MS35340-51	96906	118	2
MS35340-51	96906	120	17
MS35340-51	96906	121	24
MS35340-51	96906	122	24
MS35387-1	96906	13	13
MS35387-1	96906	121	18
MS35387-1	96906	122	18
MS35387-2	96906	113	23
MS35409-23	96906	113	69
MS35420-2	96906	13	4
MS35421-2	96906	13	7
MS35422-1	96906	13	6
MS35422-1	96906	13	9
MS35422-1	96906	113	
MS35423-1	96906	113	
MS35423-2	96906	13	
MS35424-2	96906	13	
MS35425-39	96906	112	4
MS35457-163	96906	124	1
MS35489-12	96906	268	78
MS35489-23	96906	88	40
MS35489-23	96906	112	9
MS35489-23	96906	268	71
MS35489-34	96906	111	135
MS35489-46S	96906	111	134
MS35489-56	96906	35	23
MS35489-56	96906	111	118
MS35489-81	96906	111	32
MS35489-81	96906	111	125
MS35489-81	96906	268	74
MS35490-17	96906	273	41
MS35490-22	96906	268	76
MS35490-22	96906	273	42
MS35490-35	96906	268	61
MS35490-35	96906	268	75
MS35490-38	96906	268	53
MS35490-41	96906	268	73
MS35490-7	96906	113	6
MS35490-7	96906	113	52
MS35490-7	96906	268	77
MS35490-81	96906	268	46
MS35490-81	96906	268	62
MS35649-202	96906	13	1
MS35649-202	96906	13	12
MS35649-202	96906	36	6
MS35649-202	96906	113	17
MS35649-202	96906	113	27
MS35649-202	96906	113	50
MS35649-202	96906	156	33
MS35649-202	96906	268	85
MS35649-202	96906	268	90
MS35649-202	96906	268	95
MS35649-202	96906	268	106
MS35649-2252	96906	273	59
MS35649-2252	96906	273	62
MS35649-2382	96906	15	28
MS35649-242	96906	268	40
MS35649-262	96906	111	23
MS35649-262	96906	111	31
MS35649-262	96906	111	145
MS35649-262	96906	111	214
MS35649-282	96906	37	7
MS35649-282	96906	88	44
MS35649-282	96906	111	57
MS35649-282	96906	111	138
MS35649-282	96906	113	46
MS35649-282	96906	268	100
MS35649-282	96906	269	12
MS35649-282	96906	273	9
MS35649-284	96906	8	8
MS35649-292	96906	88	30

PART NUMBER	FSCM	FIG. NO.	ITEM NO.
MS35650-302	96906	36	30
MS35650-302	96906	37	11
MS35650-302	96906	37	22
MS35650-302	96906	45	7
MS35650-302	96906	113	55
MS35650-302	96906	193	5
MS35650-302	96906	268	37
MS35690-604	96906	86	6
MS35690-624	96906	95	7
MS35691-13	96906	26	20
MS35691-14	96906	276	8
MS35691-17	96906	158	24
MS35691-17	96906	272	12
MS35691-21	96906	49	31
MS35691-21	96906	85	17
MS35691-21	96906	87	17
MS35691-25	96906	84	5
MS35691-37	96906	88	4
MS35691-37	96906	88	7
MS35691-37	96906	88	15
MS35691-37	96906	88	19
MS35691-37	96906	90	10
MS35691-37	96906	90	16
MS35691-49	96906	13	16
MS35691-53	96906	97	11
MS35692-49	96906	91	12
MS35746-1	96906	147	2
MS35746-1	96906	147	52
MS35746-1	96906	149	2
MS35754-59	96906	118	1
MS35756-14	96906	88	35
MS35756-8	96906	44	4
MS35782-5	96906	191	19
MS35802-3	96906	58	8
MS35810-32	96906	118	13
MS35810-4	96906	267	16
MS35812-2	96906	118	14
MS3584--13	96906	178	14
MS35842-10	96906	191	7
MS35842-10	96906	191	36
MS35842-11	96906	112	1
MS35842-12	96906	22	5
MS35842-13	96906	26	3
MS35842-13	96906	168	6
MS35842-14	96906	178	24
MS35842-15	96906	178	32
MS35869-2-3	96906	132	31
MS35869-2-3	96906	132	36
MS35869-2-3	96906	147	33
MS35869-2-3	96906	149	19
MS35869-2-3	96906	152	8
MS35869-2-3	96906	152	10
MS35869-2-3	96906	152	59
MS35869-2-3	96906	156	8
MS35869-4-5	96906	140	37
MS35869-4-5	96906	152	29
MS39020-28	96906	132	6
MS39020-28	96906	132	11
MS39020-28	96906	132	17
MS39020-28	96906	132	22
MS39020-28	96906	132	28
MS39020-28	96906	132	33
MS39020-28	96906	132	40
MS39020-28	96906	132	44
MS39020-28	96906	132	48
MS39020-28	96906	136	4
MS39020-28	96906	136	22
MS39020-28	96906	136	25
MS39020-28	96906	136	31
MS39020-28	96906	136	35
MS39020-28	96906	140	24
MS39020-28	96906	140	31
MS39020-28	96906	145	16
MS39020-28	96906	145	19
MS39020-28	96906	145	24
MS39020-28	96906	145	28
MS39020-28	96906	145	32
MS39020-28	96906	145	36
MS39020-28	96906	145	40
MS39020-28	96906	145	44
MS39020-28	96906	147	
MS39020-28	96906	149	

PART NUMBER	FSCM	FIG. NO.	ITEM NO.
MS39020-28	96906	149	
MS39020-28	96906	149	
MS39020-28	96906	149	
MS39020-28	96906	149	
MS39020-28	96906	149	
MS39020-28	96906	149	
MS39020-28	96906	149	
MS39020-28	96906	149	
MS39020-28	96906	149	
MS39020-28	96906	149	
MS39020-28	96906	149	
MS39020-28	96906	152	
MS39020-28	96906	152	
MS39020-28	96906	152	
MS39020-28	96906	152	
MS39020-28	96906	152	
MS39020-28	96906	152	
MS39020-28	96906	152	
MS39020-28	96906	152	
MS39020-28	96906	152	
MS39020-28	96906	152	
MS39020-28	96906	152	
MS39020-28	96906	152	
MS39020-28	96906	152	
MS39020-28	96906	152	
MS39020-28	96906	152	
MS39020-28	96906	152	
MS39020-28	96906	152	
MS39020-28	96906	152	
MS39020-28	96906	152	
MS39020-28	96906	152	
MS39020-28	96906	156	
MS39020-28	96906	156	20
MS39020-28	96906	158	
MS39020-28	96906	158	
MS39020-28	96906	158	
MS39020-28	96906	158	
MS39020-28	96906	158	
MS39020-28	96906	158	
MS39020-28	96906	158	
MS39020-28	96906	158	
MS39020-28	96906	158	
MS39020-28	96906	158	
MS39020-28	96906	158	
MS39020-28	96906	158	
MS39020-28	96906	158	
MS39020-28	96906	158	
MS39020-28	96906	158	
MS39020-28	96906	158	
MS39020-28	96906	158	
MS39020-28	96906	158	
MS39020-28	96906	158	
MS39020-28	96906	158	
MS39020-28	96906	158	
MS39020-28	96906	158	
MS39020-28	96906	158	
MS39020-28	96906	158	
MS39020-28	96906	158	
MS39020-28	96906	158	
MS39020-28	96906	160	
MS39020-28	96906	160	
MS39020-28	96906	160	
MS39020-28	96906	160	
MS39020-28	96906	160	
MS39020-28	96906	160	
MS39020-28	96906	168	
MS39020-28	96906	171	
MS39020-28	96906	171	
MS39020-28	96906	171	
MS39020-28	96906	171	
MS39020-28	96906	174	
MS39020-28	96906	174	
MS39020-28	96906	174	
MS39020-28	96906	174	
MS39020-28	96906	174	
MS39020-28	96906	174	
MS39020-28	96906	174	
MS39020-28	96906	174	
MS39020-28	96906	174	
MS39020-28	96906	174	
MS39020-28	96906	174	
MS39020-28	96906	174	
MS39020-28	96906	174	
MS39020-28	96906	174	
MS39020-28	96906	174	
MS39020-28	96906	182	
MS39020-28	96906	182	
MS39020-28	96906	182	
MS39020-28	96906	182	
MS39020-28	96906	182	
MS39020-28	96906	182	
MS39020-28	96906	182	
MS39020-28	96906	182	
MS39020-28	96906	182	
MS39020-28	96906	182	
MS39020-28	96906	182	
MS39020-28	96906	182	
MS39020-28	96906	182	
MS39020-28	96906	182	
MS39020-28	96906	182	
MS39020-28	96906	182	
MS39020-28	96906	182	
MS39020-28	96906	182	
MS39020-28	96906	182	
MS39020-28	96906	182	
MS39020-28	96906	182	
MS39020-28	96906	182	
MS39020-28	96906	182	
MS39020-28	96906	182	
MS39020-28	96906	182	
MS39020-28	96906	182	
MS39020-28	96906	182	
MS39020-28	96905	182	
MS39020-28	96906	182	
MS39020-28	96906	182	
MS39020-29	96906	140	17
MS39020-29	96906	140	35
MS39020-29	96906	152	
MS39020-29	96906	152	
MS39020-29	96906	158	
MS39020-29	96906	158	
MS39020-29	96906	158	
MS39020-29	96906	158	
MS39020-29	96906	158	
MS39020-29	96906	158	
MS39020-29	96906	158	
MS39020-29	96906	158	
MS39020-29	96906	158	
MS39020-29	96906	158	
MS39020-29	96906	158	
MS39020-29	96906	158	
MS39020-29	96906	160	
MS39020-29	96906	160	
MS39020-29	96906	160	
MS39020-29	96906	160	
MS39020-29	96906	160	
MS39020-29	96906	160	
MS39020-29	96906	160	
MS39020-29	96906	160	
MS39020-29	96906	160	
MS39020-29	96906	163	
MS39020-29	96906	168	
MS39020-29	96906	168	
MS39020-29	96906	168	
MS39020-29	96906	168	
MS39020-29	96906	168	
MS39020-29	96906	168	
MS39020-29	96906	168	
MS39020-29	96906	168	
MS39020-29	96906	168	
MS39020-29	96905	168	24
MS39020-29	96906	171	
MS39020-29	96906	171	
MS39020-29	96906	171	
MS39020-29	96906	171	
MS39020-29	96906	171	
MS39020-29	96906	174	
MS39020-29	96906	174	
MS39020-29	96906	174	
MS39020-29	96906	174	

PART NUMBER	FSCM	FIG. NO.	ITEM NO.
MS39020-29	96906	174	
MS39020-29	96906	174	
MS39020-29	96906	174	
MS39020-29	96906	174	
MS39020-29	96906	174	
MS39020-29	96906	174	
MS39020-29	96906	174	
MS39020-29	96906	174	
MS39020-29	96906	174	
MS39020-29	96906	174	
MS39020-29	96906	174	
MS39020-29	96906	174	
MS39020-29	96906	178	
MS39020-29	96906	182	
MS39020-29	96906	182	
MS39020-29	96906	182	
MS39020-29	96906	182	
MS39020-29	96906	182	
MS39020-29	96906	182	
MS39020-29	96906	182	
MS39020-29	96906	182	
MS39020-29	96906	182	
MS39020-29	96906	182	
MS39020-29	96906	182	
MS39020-29	96906	182	
MS39020-29	96906	199	
MS39020-30	96906	182	
MS39020-30	96906	182	
MS39020-30	96906	182	
MS39020-30	96906	182	
MS39021-2	96906	273	24
MS39060-2	96906	38	11
MS39061-1	96906	38	7
MS39061-1	96906	273	22
MS39061-4	96906	38	12
MS39062-1	96906	273	12
MS39103-3	96906	118	4
MS39104-2L	96906	118	5
MS39104-2R	96906	118	6
MS39157-8	96906	140	28
MS39157-8	96906	140	33
MS39162-5	96906	147	32
MS39167-5	96906	132	39
MS39167-5	96906	140	5
MS39167-5	96906	147	
MS39167-5	96906	147	15
MS39167-5	96906	147	22
MS39167-5	96906	147	31
MS39167-5	96906	147	34
MS39167-5	96906	156	
MS39167-5	96906	156	19
MS39167-5	96906	156	29
MS39167-7	96906	147	
MS39167-8	96906	140	25
MS39230-3	96906	207	68
MS39254	96906	30	12
MS39254	96906	185	17
MS39262-4	96906	132	12
MS39262-4	96906	132	18
MS39262-4	96906	132	23
MS39262-4	96906	132	29
MS39262-4	96906	136	5
MS39262-4	96906	140	18
MS39262-4A	96906	132	7
MS39262-6	96906	152	
MS39262-6	96906	152	
MS39262-6	96906	152	
MS39262-8	96906	192	
MS39263-12	96906	160	
MS39263-16	96906	184	15
MS39263-20	96906	168	
MS39263-4	96906	132	
MS39263-4	96906	132	
MS39263-4	96906	132	
MS39263-4	96906	132	
MS39263-4	96906	132	
MS39263-4	96906	132	
MS39263-4	96906	163	
MS39263-6	96906	163	

PART NUMBER	FSCM	FIG. NO.	ITEM NO.
MS39263-8	96906	160	
MS39268-8	96906	140	36
MS39290-12-12B	96906	160	
MS39290-12-12B	96906	160	
MS39290-12-12B	96906	182	
MS39290-12-12B	96906	182	
MS39290-12-12B	96906	182	
MS39290-12-12B	96906	182	
MS39290-6-6B	96906	163	
MS39290-6-6B	96906	163	2
MS39290-8-8B	96906	160	
MS39290-8-8B	96906	171	
MS39290-8-8B	96906	174	
MS39290-8-8B	96906	177	
MS39292-10-8B	96906	160	
MS39292-12-12B	96906	160	
MS39292-12-12B	96906	168	
MS39292-8-8B	96906	160	
MS39292-8-8B	96906	171	
MS39292-8-8B	96906	171	
MS39293-8-8B	96906	160	
MS39294-16	96906	184	11
MS39294-20	96906	184	3
MS39294-40	96906	178	21
MS39294-48	96906	178	29
MS39296-16A	96906	168	4
MS39296-16A	96906	177	20
MS39296-16B	96906	184	
MS39296-20A	96906	168	1
MS39296-20B	96906	182	182
MS39296-24B	96906	182	26
MS39296-24B	96906	182	181
MS39305-12	96906	168	7
MS39324-10-10	96906	160	
MS39324-10-10	96906	160	
MS39324-12-10	96906	177	18
MS39324-12-10	96906	178	6
MS39324-12-16	96906	158	32
MS39324-12-16	96906	160	25
MS39324-12-16	96906	171	10
MS39324-12-16	96906	174	10
MS39324-12-16	96906	174	26
MS39324-16	96906	158	4
MS39324-20	96906	174	46
MS39324-22	96906	171	3
MS39324-4-4	96906	182	28
MS39324-6-5	96906	254	2
MS39324-6-5	96906	254	5
MS39324-6-5	96906	254	8
MS39324-6-5	96906	254	19
MS39324-6-5	96906	254	22
MS39324-6-5	96906	254	24
MS39324-6-5	96906	254	27
MS39324-6-5	96906	254	35
MS39324-6-5	96906	254	42
MS39324-6-6	96906	182	4
MS39324-6-6	96906	182	109
MS39324-8-8	96906	158	47
MS39324-8-8	96906	158	70
MS39334-16	96906	158	11
MS39341-10-8A	96906	192	
MS39341-8-8A	96906	192	
MS45104-84	96906	113	61
MS45104-84	96906	113	66
MS45904-51	96906	268	41
MS45904-60	96906	268	38
MS45904-68	96906	276	58
MS45904-69	96906	268	48
MS45904-69	96906	268	59
MS45904-69	96906	268	68
MS45904-69	96906	268	111
MS45904-69	96906	268	139
MS45904-72	96906	268	121
MS45904-73	96906	113	2
MS45904-73	96906	113	25
MS45904-73	96906	117	15
MS45904-73	96906	276	9
MS45904-77	96906	111	120
MS49005-10	96906	189	28

PART NUMBER	FSCM	FIG. NO.	ITEM NO.
MS49005-10	96906	258	2
MS49005-10	96906	258	98
MS49005-10	96906	260	2
MS49005-10	96906	260	98
MS49005-16	96906	89	22
MS49005-8	96906	62	2
MS49005-8	96906	64	8
MS500022	27315	117	13
MS51023-49	96906	37	16
MS51067-60	96906	219	1
MS51073-1	96906	276	
MS51074-1	96906	16	5
MS51113-1	96906	273	2
MS51301-1	96906	132	57
MS51318-1	96906	113	5
MS51326-1	96906	23	36
MS51330-1	96906	116	
MS51500A8	96906	168	30
MS51500A8-4	96906	177	25
MS51503B8	96906	171	35
MS51507A6	96906	163	20
MS51517A12	96906	174	40
MS51521A8	96906	174	27
MS51523A8	96906	171	7
MS51523A8	96906	171	12
MS51523A8	96906	254	26
MS51523A8	96906	254	41
MS51531B12	96906	178	
MS51531B8	96906	160	6
MS51531B8	96906	160	29
MS51531B8	96906	163	3
MS51533B12	96906	160	
MS51533B12	96906	178	
MS51534A16-12	96906	168	13
MS51846-24	96906	145	7
MS51846-24	96906	145	48
MS51846-58	96906	140	38
MS51846-58	96906	149	7
MS51846-58	96906	152	48
MS51846-58	96906	156	26
MS51846-77	96906	136	28
MS51846-77	96906	136	48
MS51846-81	96906	156	28
MS51850-27	96906	111	7
MS51850-27	96906	111	14
MS51861-24	96906	121	11
MS51861-24	96906	122	11
MS51861-45	96906	132	2
MS51861-45	96906	132	37
MS51861-46	96906	268	10
MS51862-56C	96906	276	79
MS51873-66	96906	200	5
MS51922-17	96906	19	34
MS51922-17	96906	19	80
MS51953-40B	96906	92	4
MS51955-44	96906	86	7
MS51955-44	96906	87	1
MS51957-63	96906	13	3
MS51957-63	96906	13	10
MS51957-81	96906	82	1
MS51957-81	96906	82	21
MS51957-81	96906	91	2
MS51959-46	96906	114	1
MS51959-81	96906	109	37
MS51959-94	96906	109	40
MS51967-11	96906	84	6
MS51967-14	96906	2	7
MS51967-14	96906	8	19
MS51967-14	96906	18	15
MS51967-14	96906	25	3
MS51967-14	96906	26	18
MS51967-14	96906	40	3
MS51967-14	96906	88	26
MS51967-14	96906	88	38
MS51967-14	96906	90	36
MS51967-14	96906	93	36
MS51967-14	96906	113	62
MS51967-14	96906	113	67
MS51967-14	96906	156	16
MS51967-14	96906	168	36
MS51967-14	96906	189	58

PART NUMBER	FSCM	FIG. NO.	ITEM NO.
MS51967-14	96906	276	84
MS51967-14	96906	277	45
MS51967-2	96906	8	3
MS51967-2	96906	14	3
MS51967-2	96906	16	1
MS51967-2	96906	16	1
MS51967-2	96906	16	6
MS51967-2	96906	18	26
MS51967-2	96906	24	19
MS51967-2	96906	27	4
MS51967-2	96906	30	3
MS51967-2	96906	35	10
MS51967-2	96906	72	1
MS51967-2	96906	82	3
MS51967-2	96906	111	3
MS51967-2	96906	111	188
MS51967-2	96906	113	8
MS51967-2	96906	121	17
MS51967-2	96906	122	17
MS51967-2	96906	140	3
MS51967-2	96906	140	15
MS51967-2	96906	140	23
MS51967-2	96906	147	38
MS51967-2	96906	149	18
MS51967-2	96906	156	23
MS51967-2	96906	163	39
MS51967-2	96906	163	57
MS51967-2	96906	174	61
MS51967-2	96906	178	71
MS51967-2	96906	185	3
MS51967-2	96906	191	4
MS51967-2	96906	191	20
MS51967-2	96906	191	25
MS51967-2	96906	195	6
MS51967-2	96906	267	52
MS51967-2	96906	267	56
MS51967-2	96906	267	64
MS51967-2	96906	268	21
MS51967-2	96906	268	24
MS51967-2	96906	268	27
MS51967-2	96906	268	47
MS51967-2	96906	268	67
MS51967-2	96906	268	110
MS51967-2	96906	268	125
MS51967-20	96906	9	13
MS51967-20	96906	13	14
MS51967-20	96906	113	72
MS51967-23	96906	9	10
MS51967-23	96906	9	24
MS51967-23	96906	9	46
MS51967-23	96906	118	3
MS51967-29	96906	9	18
MS51967-29	96906	10	6
MS51967-3	96906	111	85
MS51967-3	96906	111	89
MS51967-3	96906	111	115
MS51967-3	96906	178	34
MS51967-3	96906	182	137
MS51967-3	96906	195	14
MS51967-3	96906	268	4
MS51967-3	96906	268	12
MS51967-3	96906	276	90
MS51967-4	96906	42	4
MS51967-5	96906	23	42
MS51967-5	96906	25	4
MS51967-5	96906	86	4
MS51967-5	96906	91	4
MS51967-5	96906	91	6
MS51967-5	96906	113	1
MS51967-5	96906	117	16
MS51967-5	96906	268	1
MS51967-5	96906	268	34
MS51967-5	96906	268	120
MS51967-6	96906	111	171
MS51967-6	96906	195	1
MS51967-8	96906	12	6
MS51967-8	96906	17	4
MS51967-8	96906	17	21
MS51967-8	96906	17	37
MS51967-8	96906	17	43
MS51967-8	96906	17	48

PART NUMBER	FSCM	FIG. NO.	ITEM NO.
MS51967-8	96906	17	53
MS51967-8	96906	18	21
MS51967-8	96906	18	33
MS51967-8	96906	18	37
MS51967-8	96906	19	9
MS51967-8	96906	19	14
MS51967-8	96906	19	31
MS51967-8	96906	19	65
MS51967-8	96906	19	76
MS51967-8	96906	20	4
MS51967-8	96906	20	12
MS51967-8	96906	20	26
MS51967-8	96906	21	4
MS51967-8	96906	21	21
MS51967-8	96906	21	38
MS51967-8	96906	21	43
MS51967-8	96906	32	37
MS51967-8	96906	32	40
MS51967-8	96906	35	19
MS51967-8	96906	37	1
MS51967-8	96906	47	3
MS51967-8	96906	87	2
MS51967-8	96906	89	11
MS51967-8	96906	89	15
MS51967-8	96906	97	3
MS51967-8	96906	103	1
MS51967-8	96906	117	7
MS51967-8	96906	117	12
MS51967-8	96906	145	9
MS51967-8	96906	156	55
MS51967-8	96906	174	70
MS51967-8	96906	177	25
MS51967-8	96906	178	42
MS51967-8	96906	194	5
MS51967-8	96506	199	22
MS51967-8	96906	267	38
MS51967-8	96906	268	54
MS51967-8	96906	268	113
MS51967-8	96906	268	132
MS51967-8	96906	271	28
MS51967-9	96906	171	40
MS51967-9	96906	194	11
MS51967-9	96906	276	96
MS51968-11	96906	57	5
MS51968-11	96906	193	20
MS51968-15	96906	93	10
MS51968-15	96906	93	16
MS51968-15	96906	102	16
MS51968-2	96906	49	27
MS51968-2	96906	97	26
MS51968-2	96906	115	8
MS51968-2	96906	132	60
MS51968-2	96906	267	40
MS51968-2	96906	267	46
MS51968-20	96906	97	10
MS51968-20	96906	120	14
MS51968-20	96906	121	21
MS51968-20	96906	122	21
MS51968-23	96906	163	9
MS51968-3	96906	163	49
MS51968-5	96906	113	24
MS51968-8	96906	85	28
MS51968-8	96906	86	22
MS51968-8	96906	87	26
MS51968-8	96906	96	7
MS51968-8	96906	267	13
MS51969-3	96906	111	119
MS51970-3	96906	27	12
MS53000-1	96906	268	60
MS53004-1	96906	157	
MS53007-1	96906	147	3
MS53007-1	96906	147	53
MS53007-2	96906	147	4
MS53007-2	96906	149	3
MS53015-1	96906	117	1
MS53015-2	96906	272	8
MS53046-3	96906	35	15
MS53047-1	96906	116	10
MS62069/1-2	96906	111	68
MS62069/2-1	96906	111	69
MS75004-1	96906	24	55

PART NUMBER	FSCM	FIG. NO.	ITEM NO.
MS75004-1	96906	111	
MS75004-1	96906	111	
MS75004-1	96906	111	103
MS75004-1	96906	111	108
MS75004-2	96906	24	54
MS75004-2	96906	111	
MS75004-2	96906	111	
MS75004-2	96906	111	109
MS75021-2	96906	111	54
MS75058-1	96906	24	20
MS75058-1	96906	111	117
MS75062-1	96906	147	40
MS90399	96906	23	37
MS9048-173	96906	118	16
MS9048-178	96906	118	18
MS90530-1	96906	32	20
MS90725-1	96906	185	1
MS90725-1	96906	195	16
MS90725-10	96906	152	17
MS90725-10	96906	156	21
MS90725-106	96906	111	190
MS90725-108	96906	184	16
MS90725-109	96906	113	64
MS90725-110	96906	45	12
MS90725-111	96906	8	18
MS90725-111	96906	81	1
MS90725-111	96906	113	60
MS90725-111	96906	186	3
MS90725-111	96906	277	43
MS90725-113	96906	11	5
MS90725-113	96906	178	18
MS90725-114	96906	25	1
MS90725-114	96906	40	1
MS90725-114	96906	189	56
MS90725-114	96906	218	7
MS90725-114	96906	268	140
MS90725-115	96906	113	65
MS90725-116	96906	90	34
MS90725-116	96906	93	34
MS90725-118	96906	168	34
MS90725-119	96906	88	25
MS90725-119	96906	88	37
MS90725-12	96906	147	17
MS90725-129	96906	2	6
MS90725-13	96906	113	10
MS90725-13	96906	268	26
MS90725-13	96906	268	69
MS90725-13	96906	268	127
MS90725-15	96906	267	58
MS90725-156	96906	178	26
MS90725-16	96906	111	122
MS90725-16	96906	113	73
MS90725-162	96906	13	3
MS90725-162	96906	13	26
MS90725-162	96906	13	34
MS90725-162	96906	193	1
MS90725-163	96906	109	4
MS90725-163	96906	109	26
MS90725-163	96906	109	29
MS90725-17	96906	163	54
MS90725-17	96906	267	54
MS90725-189	96906	9	43
MS90725-189	96906	254	62
MS90725-19	96906	140	21
MS90725-2	96906	149	36
MS90725-200	96906	9	22
MS90725-235	96906	10	5
MS90725-29	96906	23	33
MS90725-29	96906	269	1
MS90725-307	96906	15	26
MS90725-31	96906	84	1
MS90725-31	96906	103	15
MS90725-31	96906	117	14
MS90725-32	96906	147	58
MS90725-32	96906	268	3
MS90725-35	96906	61	3
MS90725-36	96906	7	1

PART NUMBER	FSCM	FIG. NO.	ITEM NO.
MS90725-36	96906	268	122
MS90725-38	96906	23	39
MS90725-4	96906	17	31
MS90725-4	96906	17	63
MS90725-4	96906	19	24
MS90725-4	96906	21	14
MS90725-4	96906	21	31
MS90725-4	96906	111	113
MS90725-40	96906	177	32
MS90725-41	96906	161	1
MS90725-42	96906	62	5
MS90725-46	96906	252	20
MS90725-47	96906	160	38
MS90725-48	96906	111	168
MS90725-5	96906	30	1
MS90725-5	96906	35	8
MS90725-5	96906	268	6
MS90725-5	96906	268	9
MS90725-5	96906	268	14
MS90725-5	96906	268	23
MS90725-5	96906	268	49
MS90725-5	96906	268	58
MS90725-5	96906	268	112
MS90725-5	96906	268	138
MS90725-50	96906	147	36
MS90725-55	96906	23	19
MS90725-55	96906	103	6
MS90725-57	96906	17	34
MS90725-57	96906	17	45
MS90725-57	96906	21	44
MS90725-57	96906	27	1
MS90725-57	96906	27	8
MS90725-57	96906	273	60
MS90725-58	96906	20	33
MS90725-58	96906	20	40
MS90725-58	96906	31	5
MS90725-58	96906	89	7
MS90725-58	96906	120	1
MS90725-58	96906	268	15
MS90725-58	96906	268	18
MS90725-58	96906	268	56
MS90725-58	96906	268	115
MS90725-58	96906	271	26
MS90725-58	96906	277	5
MS90725-59	96906	17	1
MS90725-59	96906	17	18
MS90725-59	96906	17	40
MS90725-59	96906	17	50
MS90725-59	96906	43	6
MS90725-59	96906	65	9

PART NUMBER	FSCM	FIG. NO.	ITEM NO.
MS90725-61	96906	19	79
MS90725-62	96906	19	33
MS90725-62	96906	184	9
MS90725-62	96906	221	9
MS90725-62	96906	224	13
MS90725-62	96906	267	9
MS90725-64	96906	17	12
MS90725-64	96906	28	5
MS90725-64	96906	32	35
MS90725-65	96906	156	53
MS90725-65	96906	224	27
MS90725-66	96906	26	15
MS90725-66	96906	49	3
MS90725-66	96906	109	13
MS90725-67	96906	221	1
MS90725-68	96906	97	1
MS90725-69	96906	168	20
MS90725-69	96906	267	36
MS90725-7	96906	140	1
MS90725-7	96906	140	13
MS90725-71	96906	224	5
MS90725-71	95906	224	12
MS90725-71	96906	224	21
MS90725-72	96906	178	69
MS90725-74	96906	49	4
MS90725-74	96906	229	9
MS90725-76	96906	158	26
MS90725-8	96906	8	1
MS90725-8	96906	24	17
MS90725-8	96906	111	1
MS90725-8	96906	111	87
MS90725-8	96906	177	23
MS90725-8	96906	182	139
MS90725-8	96906	267	50
MS90725-8	96906	268	30
MS90725-83	96906	32	41
MS90725-85	96906	191	38
MS90725-87	96906	182	172
MS90725-89	96906	184	1
MS90725-9	96906	174	68
MS90725-92	96906	168	32
MS90726-1	96906	49	25
MS90726-1	96906	182	36
MS90726-1	96906	182	52
MS90726-1	96906	182	68
MS90726-1	96906	182	84
MS90726-1	96906	182	97
MS90726-1	96906	182	114
MS90726-1	96906	182	127
MS90726-10	96906	132	58
MS90726-11	96906	272	3
MS90726-111	96906	102	13
MS90726-113	96906	90	13
MS90726-113	96906	90	15
MS90726-113	96906	91	17
MS90726-113	96906	93	13
MS90726-113	96906	93	15
MS90726-113	96906	102	15
MS90726-114	96906	90	17
MS90726-114	96906	93	17
MS90726-114	96906	102	17
MS90726-115	96906	95	8
MS90726-115	96906	96	8
MS90726-168	96906	120	12
MS90726-168	96906	121	19
MS90726-168	96906	122	19
MS90726-170	96906	113	70
MS90726-33	96906	113	3
MS90726-57	96906	32	4
MS90726-58	96906	82	13
MS90726-59	96906	186	17
MS90726-62	96906	86	20
MS90726-62	96906	87	24
MS90726-62	96906	95	5

PART NUMBER	FSCM	FIG. NO.	ITEM NO.
MS90726-62	96906	96	5
MS90726-62	96906	117	4
MS90726-62	96906	199	19
MS90726-64	96906	46	1
MS90726-64	96906	117	9
MS90726-65	96906	85	25
MS90726-67	96906	95	6
MS90726-67	96906	96	6
MS90726-68	96906	97	39
MS90726-8	70281	276	57
MS90726-85	96906	84	12
MS90726-85	96906	103	17
MS90726-90	96906	252	9
MS90727-192	96906	120	16
MS90727-192	96906	121	23
MS90727-192	96906	122	23
MS90727-34	96906	25	10
MS90727-39	96906	254	30
MS90727-87	96906	199	17
MS90727-91	96906	219	17
MS90728-14	96906	163	37
MS90728-17	96906	149	16
MS90728-162	96906	254	60
MS90728-189	96906	9	8
MS90728-191	96906	254	58
MS90728-33	96906	31	9
MS90728-33	96906	63	1
MS90728-33	96906	64	16
MS90728-62	96906	43	7
MS90728-63	96906	63	10
MS90728-64	96906	53	4
M1283	61208	40	45
M1284	61208	40	44
M1292A	61208	40	46
M1930F	61208	40	48
M2002AY	61208	40	47
M2023F	61208	40	59
M2027AN	61208	40	42
M2051AE	61208	40	66
M2051K	61208	40	18
M2051X	61208	40	9
M24665-419	96906	102	8
M2933	92863	184	
M2933-1	92863	184	19
M2933-2000-2	92863	184	22
M2933-4	92863	184	23
M2933-5110K	92863	184	20
M2933-8	92863	184	18
M449	13445	38	26
M491	13445	16	12
M503	61208	40	52
MS2525/17-20	81349	184	
M628	13445	12	28
M639B	61208	40	62
M874-46ZT	60703	131	4
NT1155	01843	12	17
NT8407	75497	26	11
NT8463	75497	34	1
N11075A	40342	157	3
N11728BJ	06721	157	28
N11728CK	06721	157	21
N11728CT	06721	157	22
N11728GH	06721	157	20
N11728GH	06721	157	25
N1851A	40342	157	7
N1941R	40342	157	23
N402-22	13548	113	
PF110-4-2	98660	82	49
PL3	13548	111	13
PL3	13548	111	19
PL3	13548	113	49
PL3	13548	121	14
PL3	13548	122	14
PS015	50988	163	30
P01-6735	18265	31	16
P10-0808	18265	194	14
P10-1467	18265	31	17
P10-5533	18265	31	2
P10-5534	18265	194	8
P10-5609	18265	31	4
P10-5611	18265	194	2
P10-6329	18265	194	16
P10-6589	18265	194	17
P11-3320	18265	194	19
P16718	18265	31	20
P16727	18265	31	15
P16729	18265	31	14
P16731	18265	31	
P16732	18265	31	13
P17804	18265	194	15
P18464	18265	194	18
P4195	18265	31	12
P5301	18265	31	19
QS3267-370	61112	185	
QS3267-879	61112	30	
RRW410 TYP-1 CL2	81348	1	18
RS-80325-MSC	73484	17	35
RS62200MSC	73484	109	38
RS80325MSC	73484	17	2
RS80325MSC	73484	17	19
RS80325MSC	73484	17	51
RS80325MSC	73484	18	20
RS80325MSC	73484	18	32
RS80325MSC	73484	18	36
RS80325MSC	73484	19	8
RS80325MSC	73484	19	13
RS80325MSC	73484	19	30
RS80325MSC	73484	19	64
RS80325MSC	73484	19	75
RS80325MSC	73484	20	3
RS80325MSC	73484	20	11
RS80325MSC	73484	20	25
RS80325MSC	73484	21	3
RS80325MSC	73484	21	19
RS80325MSC	73484	21	37
RS80325MSC	73484	21	42
RS80325MSC	73484	36	26
RXGM03-10553	62983	173	2
R08934	46529	26	
R1202-013	99185	169	1
SA4751	33525	15	3
SA4751	33525	271	3
SA6340	98440	34	17
SC1692	01843	12	25
SH721201	01843	12	24
SP1079-54	60703	131	
SP7211	01843	12	18
SP8558	50988	165	18
SR721023A	01843	12	13
SST4H	06383	111	24
SST4H	06853	111	58
SW7224	01843	38	13
S1004	15434	229	28
S1054	15434	229	27
S1728	15434	224	34
S1818	15434	229	1
S1998	15434	224	28
S200	15434	219	2
S223	15434	253	2
S2268	15434	228	20
S3050	15434	221	23
S509	11083	35	17
S602	15434	229	2
S604	15434	224	22
S908	15434	224	11
S908	15434	224	17
S908	15434	224	33
S908	15434	243	17
S9108	15434	229	25
S9108	15434	240	24
S9108	15434	244	12
S9118	15434	221	26
S9118	15434	224	18
S9118	15434	224	31
S9118	15434	230	8
S9118	15434	244	13
S915A	15434	224	19
S915A	15434	224	41
S946	15434	229	23
S962	15434	243	18
S962	15434	251	2
S964	15434	229	16
S995	15434	224	32

PART NUMBER	FSCM	FIG. NO.	ITEM NO.
S995	15434	240	26
S995	15434	244	14
TBF22-15PS	31746	24	11
TBF22-28PS	31746	24	12
TBF24-2008-24PS	31746	24	15
T409-1	61112	185	21
T410	61112	185	20
T60	70040	47	
WA1216	01843	12	26
WA1654	01843	12	19
WA1793	99066	12	21
WA721033	01843	12	16
WF-2013	33457	250	3
WF2051	33457	28	4
WF2051	33457	250	2
WWC24K2633	01843	12	27
WWC440	81348	224	2
WWT775	81349	132	
WWT775	81349	132	
WWT775	81349	132	
WWT775	81349	132	
WWT775	81349	136	46
WWT775	81349	140	7
WWT775	81349	145	17
WWT775	81349	147	16
WWT775	81349	147	22
WWT775	81349	156	
WWT775	81349	156	
X1429	70485	268	45
X349	33323	86	34
X349	33323	87	30
Z99036	43334	8	11
01690009	70281	276	12
01872-27NT27WC	C1843	12	11
028264	77640	128	12
029031	77640	125	5
029037	77640	125	3
0301G016	70281	276	78
040013	77640	125	8
0637V058	27315	36	9
08015077	70281	276	93
094V001	27315	13	24
1-14J1059	27315	7	23
1-20Q48	27315	168	
1-20U21	27315	17[illegible]	
1-206P173	27315	87	15
1-45HPS	30780	127	34
1-45HPS	30780	128	1
1-4X1-2	70281	276	22
1-44Q2580	27315	192	5
1-44Q2940	27315	192	12
1-56Q402	27315	273	17
1-60470-001	71044	270	17
1-60475-001	71044	270	21
1-8X3-8	70281	276	49
1-820N29	27315	156	29
1-820N3406	27315	156	41
1-820N6301	27315	156	37
1-820N6401	27315	156	36
1-820N6407	27315	156	39
1-820P442	27315	163	
1-906N34	27315	19	22
1-906N34	27315	21	29
10-27P2427	27315	12	31
10-32X3-8	70281	276	70
10-350349-203	77820	7	37
10F02	12603	260	1
10F16	12603	207	8
10F2	12603	258	1
10F4J	70411	145	21
10H25	12603	257	13
10H25	12603	258	58
10H25	12603	258	69
10H25	12603	260	58
10H25	12603	260	69
100230A	27315	220	1
100J4315	27315	24	
100J4321-1	27315	81	
100J4329-1	27315	23	

PART NUMBER	FSCM	FIG. NO.	ITEM NO.
100J4332	27315	38	
100N2480F1	27315	8	
100N2574-1	27315	11	
100N2580-1	27315	11	
100N2603	27315	12	
100T260	27315	254	33
100001	09704	25	
100108410	79470	191	57
100124	19207	219	14
101031A	40342	157	9
101318A	40342	157	17
101319A	40342	157	18
1014458	70281	276	
1014459	70281	276	109
101489	73370	252	7
101489	73370	252	18
101502A	40342	157	13
101514C	40342	157	32
101650A	40342	157	14
102458	73370	252	10
10381-4	30327	145	47
103092	72582	45	6
103320	72582	66	2
103321	72582	65	5
103321	72852	46	2
103647	72582	46	4
103647	72582	47	4
103647	72582	61	9
104398	73370	251	10
104399	73370	251	9
104500	73370	251	7
104501	73370	251	8
104503	73370	251	13
104623	15434	252	1
104695	73370	251	6
104790	15434	252	6
104975	73370	252	8
105X4	79470	82	35
105X4	79470	89	28
105X5	79470	82	
105X5	79740	82	
106023	03504	260	100
106326	73370	251	12
106498	73370	252	4
106498	73370	252	13
107010	03504	258	60
107010	03504	260	60
10706-20A2	97403	9	3
1071	62983	181	1
107147	15434	252	
107947	15434	223	4
107981	15434	236	1
108X10	45681	180	6
108330	15434	219	4
108608	72582	64	6
108722	15434	229	8
10885172	19207	269	16
109108	73370	251	11
109155	15434	267	42
10929868	19207	43	14
11-27P2427	27315	12	32
11-27P2668	27315	23	43
11H15	12603	258	79
11J2601	27315	81	8
11J2602	27315	81	9
11J2603	27315	81	10
11J2604	27315	81	7
11J2605	27315	81	5
11J2606	27315	81	4
11N2132	27315	11	29
11N2137	27315	81	3
11N2138	27315	81	6
11P1690	27315	11	16
11P1691	27315	11	15
11081-2-1-4	30327	149	56
110907	15434	243	15
1114857	16764	42	
111557	82271	166	
111559	82271	166	15
111560	82271	166	12
111560	82271	166	20

PART NUMBER	FSCM	FIG. NO.	ITEM NO.
1119870	16764	111	189
112726	24617	68	4
1131-0304	82271	166	18
113175	72582	57	7
113359	12603	258	66
113359	12603	260	66
113363	12603	258	61
113363	12603	260	61
113364	12603	258	61
113364	12603	260	61
113371	12603	258	13
113371	12603	260	13
114547	72582	57	3
114850	15434	229	4
11613407-2	19207	44	1
117049	72582	65	6
117049	72852	46	3
117049	97907	32	6
117184	03504	260	102
117185	12603	260	101
118831	12603	258	14
118831	12603	260	14
119096	24617	89	19
119469	12603	258	96
119469	12603	260	96
119470	03504	258	10
119470	03504	260	10
119496	03504	260	105
119497	03504	260	
119542	03504	260	104
12-10C50XS	30780	178	62
128CAXC	70434	178	1
12M15	03504	258	62
12S68XSS	30780	178	5
120217	72582	45	8
1203R001	70281	276	53
1203R001	70281	276	77
1203R001	70281	276	81
1205R001	70281	276	52
1205R001	70281	276	82
1205R011	70281	276	76
121214	03504	258	99
121214	03504	260	99
1216R004	70281	276	37
1216R004	70281	276	44
1216R004	70281	276	64
1216R004	70281	276	69
1216R008	72279	276	18
1219R003	70281	276	17
1219R004	70281	276	72
122366	72582	58	10
122913	70281	276	19
12483	13644	17	44
1251	24455	38	30
1251	24455	114	4
1251	73331	116	5
125673	62983	172	2
125674	62983	172	4
128903	70281	276	67
128903-1	70281	276	66
13T271	27315	18	9
1315	58440	193	26
13205E3292	97403	173	
13205E3312-1	97403	191	37
13205E3459	97403	178	30
13205E3464	97403	186	14
13205E3780-1	97403	149	42
13205E3838-3	97403	132	30
13205E3838-3	97403	132	50
13205E3838-3	97403	132	52
13205E3838-3	97403	136	10
13205E3838-3	97403	136	14
13205E3838-3	97403	136	47
13205E3838-3	97403	156	10
13205E3840	97403	132	8
13205E3840	97403	132	25
13205E3843-1	97403	152	47
13205E3843-3	97403	149	8
13205E3847-1	97403	149	54
13205E3855-1	97403	147	78
13205E3874-1	97403	136	27

PART NUMBER	FSCM	FIG. NO.	ITEM NO.
13205E3874-1	97403	145	5
13205E3886	97403	178	12
13205E3917	97403	149	6
13205E3920	97403	131	
13205E3922-1	97403	178	
13205E3922-2	97403	168	
13205E3937-2	97403	171	
13205E3937-2	97403	177	12
13205E3937-2	97403	182	19
13205E4323	97403	178	22
13205E4334	97403	192	10
13205E4420-1	97403	158	1
13205E4420-1	97403	158	30
13205E4420-1	97403	158	45
13205E4420-1	97403	158	68
13205E4421-1	97403	120	5
13205E4421-1	97403	158	2
13205E4421-1	97403	158	31
13205E4421-1	97403	158	44
13205F4421-1	97403	158	69
13205E4541	97403	268	72
13206E2119	97403	118	17
13206E3184	97403	124	
13206E3303	97403	268	103
13206E4482-2	97403	156	17
13206E5160	97403	120	
13206E5160	97403	121	
13206E5193	97403	267	1
13206E5353	97403	118	45
13208F6453	97403	267	49
13208E6457	97403	267	14
13208E6521	97403	126	26
13208E6593	97403	254	48
13208E6789	97403	174	5
1321E9498	97403	193	25
1321F9538	97403	194	
13212E4305	97403	38	10
13212F4472-1	97403	111	9
13212F4472-1	97403	111	16
13212E4472-1	97403	111	40
13212E4472-1	97403	111	67
13212F4473	97403	111	8
13212E4473	97403	111	15
13212E4473	97403	111	39
13212E4473	97403	111	66
13212E4473	97403	111	204
13213F9101	97403	168	
13213F9101	97403	168	
13213E9136	97403	112	10
13213E9159	97403	120	11
13213E9159	97403	121	8
13213E9159	97403	122	8
13213F9201	97403	126	27
13213E9212	97403	111	41
13213E9213	97403	111	17
13213E9216	97403	112	3
13213E9243	97403	191	14
13213E9243	97403	191	43
13213F9243	97403	191	61
13213E9356	97403	267	65
13213E9360-3	97403	267	41
13213E9403	97403	186	13
13213E9434	97403	186	11
13213E9441	97403	111	206
13213E9453	97403	175	
13213F9487	97403	179	
13213E9490	97403	111	
13213E9520	97403	193	24
13213E9522	97403	193	12
13213E9572	97403	186	16
13213E9754	97403	170	
13213E9799-1	97403	160	14
13215E3578	97403	268	80
13215E4518	97403	268	64
13215E7621	97403	111	43
13215E7621	97403	111	65
13215E7622-14	97403	111	104
13215E7622-15	97403	111	101
13215E7622-16	97403	111	107
13215E7622-17	97403	111	111

PART NUMBER	FSCM	FIG. NO.	ITEM NO.
13215E7622-18	97403	111	112
13215E7622-19	97403	111	110
13215E7622-21	97403	111	98
13215E7622-23	97403	111	217
13215E7622-32	97403	111	219
13215E7638-5	97403	182	
13215E7641-1	97403	132	15
13215E7641-1	97403	132	21
13215E7641-1	97403	132	26
13215E7641-1	97403	152	
13215E7641-1	97403	152	
13215E7641-1	97403	156	9
13215E7642-6	97403	132	5
13215E7642-6	97403	132	10
13215E7642-6	97403	132	16
13215E7642-6	97403	132	20
13215E7642-6	97403	132	27
13215E7642-6	97403	136	3
13215E7642-6	97403	152	
13215E7644	97403	267	45
13215E7647-1	97403	158	
13215E7647-1	97403	158	
13215E7647-1	97403	158	
13215E7647-1	97403	158	
13215E7647-1	97403	158	
13215E7647-1	97403	158	
13215E7647-1	97403	158	
13215E7647-1	97403	158	
13215E7647-1	97403	158	
13215E7647-1	97403	158	
13215F7647-1	97403	158	
13215E7647-1	97403	171	
13215E7653-5	97403	182	
13215E9952	97403	193	15
13215E9969	97403	112	8
13215E9970	97403	112	7
13216E7855	97403	169	
13216E7856	97403	181	
13216F7862-1	97403	184	
13216E8020	97403	165	
13216E9542	97403	166	
13217E3077	97403	9	28
13217E3079-3	97403	9	19
13217E3079-4	97403	9	20
13217F3081	97403	9	21
13217E3083	97403	9	25
13217E3084-2	97403	9	14
13217E3085-2	97403	9	27
13217E3151	97403	182	140
13217E3153	97403	268	52
13217E6260	97403	9	
13217E6262	97403	9	50
13217E6279-2	97403	9	15
13217E6279-3	97403	9	16
13217E6279-4	97403	9	11
13217E6283	97403	9	42
13217E6285	97403	9	40
13217E6287	97403	9	34
13217E6288	97403	9	36
13217E6289	97403	9	26
13217E6704-16	97403	111	99
13217E6704-35	97403	111	100
13217E6704-35	97403	111	116
13217E6704-8	97403	111	202
13217E6705-175	97403	111	18
13217E6705-285	97403	111	76
13217E6707-17P	97403	111	49
13217E6707-30P	97403	111	195
13217E6911	97403	193	7
13217E7540	97403	9	31
13218E0001-302	97403	112	2
13218E0110-15	97403	149	55
13218F0114-15	97403	140	39
13218E9286-2	97403	132	4
13218E9286-2	97403	136	2
13218E9290	97403	111	91
13219E0553	97403	267	21
13219E0569	97403	191	31
13219E0574	97403	191	3
13219E0605	97403	178	38
134039	70281	276	92
134045	70281	276	107
134046	70281	276	108
134063	02880	129	3
134063	02880	255	9
134063	03504	256	5
134063	03504	256	15
134063	03504	257	5
134063	03504	257	10
134085	70281	276	56
134108	70281	276	40
134109	70281	276	45
134130	15434	219	9
134140	70281	276	59
136568	62983	173	7
137397	72582	79	29
137401	72582	60	4
137407	72582	32	14
137407	72582	32	19
137421	72582	52	2
137423	72582	32	12
137423	72582	32	18
137795	15434	253	3
137896	15434	219	12
139472	73370	252	5
14H754	27315	17	8
14J1216	27315	23	30
14J1217	27315	18	22
14N1796	27315	7	22
14N2107	27315	23	21
14N2108	27315	23	25
14N2109	27315	23	9
14N211	27315	20	28
14P2538	27315	38	9
14P2539	27315	109	3
14P254101	27315	23	27
14P254102	27315	23	16
14P254103	27315	23	22
14057	27315	194	7
14074	27315	126	37
14T1610	27315	8	9
14T1663	27315	31	3
14U90	27315	112	
14U94	27315	26	12
14U95	27315	17	10
14Z20901	27315	23	11
140855	97907	49	29
142383	73370	251	5
1425	96509	1	3
1426	96509	1	17
1428	98440	34	8
142884	73370	251	4
143087	15434	251	19
143212	24617	85	2
143212	24617	87	23
144X8X8X6	72216	149	12
144X8X8X6	72216	149	15
145X6X6X8	72216	152	49
145X6X6X8	72216	156	25
148376	15434	229	22
149557	73370	252	12
15-100J4315	27315	24	1
15F4J	70411	132	24
15F4J	70411	136	6
15F4J	70411	136	16
15F4J	70411	140	12
15P78701	27315	97	8
1503536	72582	46	8
1505	98440	34	16
151328	73370	252	11
1517WFN	98440	34	15
151809	73370	252	17
153526	15434	251	
154005	62983	173	12
154005	62983	173	3
154012	62983	173	4
154130	62983	175	5
154130	62983	179	2
154141	62983	173	19
154615	15434	219	11

PART NUMBER	FSCM	FIG. NO.	ITEM NO.
154638	15434	219	16
156A	19557	24	5
1568211	72582	45	3
158-11	30226	272	5
158-14	30226	272	7
158-15	30226	272	14
158A	30226	272	22
158B2	30226	272	17
158C	30226	272	18
158D	30226	272	19
158E	30226	272	13
158EXU	30226	272	
158F1	30226	272	20
158G	02261	272	21
158H3	30226	272	10
158I	30226	272	11
158J1	30226	272	9
15851-10	98441	22	7
16-100J4315	27315	24	2
16C50XS	30780	184	8
16F06	03504	258	97
16F06	03504	260	97
16J900	27315	38	29
16J901	27315	38	31
16J911	27315	113	63
16J912	27315	113	68
16N1592	27315	7	24
16N1911-1	27315	35	22
16N1956	27315	30	15
16N244	27315	109	18
16P2810	27315	36	27
16P2818	27315	36	24
16P3852	27315	24	16
16P3860	27315	35	1
16P3862	27315	32	43
16P3868	27315	36	35
16P3869	27315	191	28
16Q35D4	27315	194	6
16T4090	27315	37	13
16T5067	27315	26	21
16T5081	27315	23	54
16T5085	27315	23	35
16T5096	27315	37	24
16Z410	27315	268	142
16Z416	27315	34	3
1603012	00447	13	38
160334-1	78947	274	13
160334-1	78947	275	13
160334-2	78947	274	11
160334-2	78947	275	11
160334-3	78947	274	6
160334-3	78947	275	6
160334-4	78947	274	2
160334-4	78947	275	2
160334-5	78947	274	1
160334-5	78947	275	1
160334-6	78947	274	5
160334-6	78947	275	5
160334-8	78947	274	18
160334-9	78947	275	18
160338	78947	274	
160338	78947	275	
160367	78947	274	17
160367	78947	275	17
160403-1	78947	274	9
160403-1	78947	275	9
160403-2	78947	274	10
160403-2	78947	275	10
160571	62983	173	22
160861	15434	253	5
16108L	95879	197	21
16108L	95879	277	71
161466	78947	274	
161467	78947	275	
16278	55879	109	7
162741	62983	173	6
166360	62983	173	20
167165	15434	251	18
1679-6	33043	15	
168-100J4314	27315	34	5

PART NUMBER	FSCM	FIG. NO.	ITEM NO.
168367	62983	173	18
169-100J4314	27315	34	6
17-2915N20F1	27315	86	35
17-2915N20F1	27315	87	29
17C1236H	03504	258	67
17C1236H	12603	260	67
17H274	27315	88	17
17H274	27315	88	21
17H286	27315	85	35
17H286	27315	91	5
17Q12	27315	254	12
17T224	27315	103	29
17Z277	27315	97	13
17Z286D4	27315	23	15
17Z317	27315	91	9
17Z317	27315	101	1
17Z378	27315	95	4
17Z378	27315	96	4
17Z438	27315	10	4
1726-1610	80538	15	21
17288	95879	80	11
175850	15434	229	24
176366	73370	252	14
1771-16J	60703	131	16
1772A2	80625	224	8
178079	15434	229	31
178551	72582	43	9
178551	72582	43	12
179308	15434	221	7
179309	15434	221	20
179347	62983	173	13
179803	72582	49	8
18H3892D133	27315	109	36
18H3892D134	27315	109	35
18H3892D26	27315	97	19
18H3892D264	27315	97	21
18H3892D265	27315	97	20
18H3892D287	27315	97	22
18H3892D398	27315	12	3
18P4038	27315	8	16
18P4263	27315	26	5
18P930D32	27315	97	41
18P931D156	27315	2	9
18P933D18	27315	85	34
18P933D30	27315	87	21
18P933D34	27315	87	22
18P933D35	27315	85	15
18P933D43	27315	85	21
18P933D52	27315	91	40
18P933D85	27315	85	22
18P933D93	27315	85	13
18P949D612	27315	11	11
18P949D86	27315	11	9
18Q105D27	27315	267	5
18Q106D39	27315	191	44
18Q110D115	27315	122	4
18T1058	27315	12	7
18T11079	27315	8	5
18T11167D1	27315	277	20
18T11215	27315	34	21
18T3563	27315	19	60
18T5035	27315	109	15
18T6700D20	27315	90	32
18T6700D20	27315	93	32
18T6702	27315	109	8
18T6720	27315	109	10
18T6735	27315	109	6
18T8438C1	27315	97	12
18T8653D1	27315	17	30
18T8653D1	27315	17	62
18T8653D1	27315	19	21
18T8653D1	27315	21	13
18T8653D1	27315	21	30
18T8653D2	27315	17	25
18T8653D2	27315	17	57
18T8653D2	27315	19	18
18T8653D2	27315	21	8
18T8653D2	27315	21	25

PART NUMBER	FSCM	FIG. NO.	ITEM NO.
18T8653D3	27315	17	28
18T8653D3	27315	17	60
18T8653D3	27315	19	23
18T8653D3	27315	21	11
18T8653D3	27315	21	28
18Z2075D10	27315	17	41
18Z2075D8	27315	16	4
18Z2432	27315	113	30
18Z2434	27315	267	6
18Z2444D1	27315	113	26
18Z2444D2	27315	268	124
180150	72582	43	1
180372	15434	229	3
180372	15434	229	13
180381	15434	224	16
180381	15434	224	37
1807-1600	80538	15	23
1807-1600	80538	271	23
180878	15434	253	6
181371	72582	65	2
181377	72582	65	3
181792	62983	175	4
181792	62983	179	1
183913	15434	221	22
185347	15434	229	29
185814	15434	229	19
186262	72582	63	13
186348	15434	221	12
186618	72582	64	12
186619	72582	64	1
186625	72582	66	1
186780	15434	224	9
187697	15434	221	13
189551	15434	224	15
189561	15434	224	30
189565	15434	224	10
189565	15434	224	26
189566	15434	224	20
19F16	03504	200	2
19F50D90	27315	91	28
19F54D17	27315	87	20
19F55D47	27315	91	35
19F57D13	27315	11	4
19F59D10	27315	9	5
19F59D9	27315	11	25
19F69D6	27315	11	2
19F69D7	27315	11	18
19F79D335	27315	101	7
19P544	27315	11	21
19P812	27315	109	9
19Q14D166	27315	267	24
19T2409	27315	19	61
19T2958	27315	18	10
19T3650	27315	88	1
19T5638	27315	37	19
19Z15008	27315	87	8
19Z283D2	27315	267	43
19Z8D4	27315	23	48
1902D012	70281	276	
1902D012-1	70281	276	101
1902D012-2	70281	276	102
1902D012-3	70281	276	103
1902D012-4	70281	276	104
1902D012-5	70281	276	105
1902D012-6	70281	276	106
190229	15434	224	4
1903J010	70281	276	50
1906J003	70281	276	97
19062	82271	166	19
190877	19207	113	35
190877	19207	113	41
191175	15434	228	21
1914647	18876	42	6
1930611	16764	42	36
1933111	16764	42	44
1945356	16764	42	25
1964857	16764	42	26
1965N	61208	40	60
196644	15434	229	21
196645	15434	229	26
196887	15434	221	6
196964	15434	228	7
196985	15434	224	7
196985	15434	224	23
2-20U21	27315	178	
2MA4ZMB	70434	132	1
2MA4ZMB	70434	132	13
2MA4ZMB	70434	132	56
2MA4ZMB	70434	136	15
2MA4ZMB	70434	140	19
2M4ZMB	70434	192	4
2M4ZMB	70434	192	16
2X346	40342	157	10
20B48701-114	41625	30	5
20B48701-138	41625	37	14
20H1614D4	27315	17	13
20H1614D4	27315	21	48
20H1687D9	27315	17	6
20H1935D9	27315	91	39
20H33	27315	91	7
20N252D1	27315	26	17
20N252D2	27315	26	16
20Q42	27315	206	6
20Q43D15	27315	149	23
20Q43D15	27315	149	32
20Q46D2	27315	178	64
20Q48	27315	168	5
20Q49	27315	191	10
20Q51	27315	191	11
20Q52	27315	191	9
20Q53	27315	191	32
20Q55	27315	191	33
20Q56	27315	191	17
20Q57	27315	191	40
20Q59	27315	111	5
20Q62	27315	268	89
20Q63	27315	268	109
20Q64	27315	195	10
20Q67-D17	27315	182	154
20Q67-C17	27315	182	174
20Q67D17	27315	182	160
20Q69	27315	268	99
20Q70-D3	27315	182	
20Q87D12	27315	34	23
20T133	27315	89	17
20T2978	27315	86	5
20T345	27315	97	17
20T4084	27315	97	14
20T5485D15	27315	26	22
20T8068	27315	35	14
20U23	27315	178	17
20U24	27315	168	31
20U25	27315	168	8
20U26	27315	178	39
20U27	27315	111	6
20U28-D109	27315	182	155
20U28-D109	27315	182	159
20U28-D122	27315	182	22
20U28-D4	27315	182	32
20U28-D57	27315	182	184
20U28D51	27315	191	45
20Z1170	27315	19	47
20Z1584	27315	267	2
20Z1586	27315	191	41
20Z1589D6	27315	113	58
20Z1590	27315	113	56
20Z1594	27315	191	16
20Z1599	27315	268	94
20Z2075D10	27315	17	46
20Z2660	27315	85	18
20Z40D14	27315	23	7
20Z40D6	27315	38	8
20Z41D7	27315	22	11
20Z41D7	96906	22	1
20Z42D1	27315	273	28
20Z60	27315	86	36
20Z60	27315	87	32
20Z616D4	27315	109	44
20Z616D8	27315	109	41

PART NUMBER	FSCM	FIG. NO.	ITEM NO.
202640142	27315	91	41
202646047	27315	26	10
20264909	27315	160	12
20264909	27315	160	23
20264909	27315	160	49
202660	27315	87	16
202886011	27315	23	14
20288606	27315	26	8
20290901	27315	16	10
200R152-001	99185	169	13
200X5	79470	82	8
200X5	79470	82	39
200X5	79470	86	13
200277C	40342	157	8
200279A	40342	157	6
2003-12-10	16717	156	12
200347	15434	252	3
200553-A	40342	157	5
200819	15434	251	17
200845	15434	243	14
2013	98440	34	9
2013	98440	193	16
201609	06853	150	7
201610	06853	150	6
201611	06853	150	1
201612	06853	150	2
201614	06853	150	3
202321	90192	196	12
2024-2-4S	00624	32	31
202678	06853	138	11
202678	06853	154	4
202983	C6853	134	2
203071	15434	229	15
203102	06853	144	3
203198	06853	153	4
203760	15434	219	13
203821	06853	148	10
204163	15434	250	1
204163	33457	28	7
205T51	27315	91	16
205T51	27315	91	37
205105	06853	150	
205730-9	06853	147	54
205730-9	06853	149	4
206N26	27315	85	26
206N42F1	27315	85	29
206N45	27315	88	14
206N47F1	27315	97	
206N48F1	27315	97	
206P168F1	27315	91	36
206P170F1	27315	85	31
206P171F1	27315	85	3
206P173F1	27315	87	
206P176	27315	88	36
206P198	27315	88	10
206P199	27315	101	10
206P200	27315	101	11
206P62	27315	85	24
206P73F1	27315	102	6
206T151	27315	91	29
206T166	27315	85	10
206T193	27315	88	24
206T195	27315	20	7
206T201	27315	88	28
206T202	27315	85	16
206T39	27315	95	3
206T39	27315	96	3
206T6	27315	87	11
206T77C1	27315	90	11
206T77C1	27315	93	11
206T8	27315	85	33
206T8	27315	87	18
206T92	27315	85	32
206110	50988	174	71
2062-12-12S	01276	160	20
2062-6-6S	01276	182	7
7062-6-6S	01276	182	61
20816-801	71044	270	29
209008	50988	165	6

PART NUMBER	FSCM	FIG. NO.	ITEM NO.
21-227-05	04710	23	46
21-90	70281	276	87
210T44	27315	87	4
210T46	27315	86	11
210T47	27315	86	10
210T48D1	27315	88	32
210T48D2	27315	88	33
2100J348F1	27315	85	
2100N173F2	27315	87	
2100N200-2	27315	2	
2100N214-1	27315	10	
2100P106-1	27315	13	
2100P107-1	27315	13	
2100P107-2	27315	13	
2100P56-7	27315	8	
210050	06853	138	5
210492	06853	148	3
211280	79470	28	3
211401	50988	165	13
211433	12603	200	1
211433	12603	207	67
213203	06853	150	5
213265	50988	165	17
213288	50988	165	14
214F20USPH	96509	1	
214N41	27315	20	27
214P52	27315	102	12
214P54	27315	89	6
214P55F1	27315	109	23
214P56F1	27315	109	19
214P64	27315	90	12
214P64	27315	93	12
214P77	27315	17	7
214T39	27315	89	10
214T42	27315	109	32
214T44	27315	88	41
214184	15434	243	26
214189	15434	228	6
214253	15434	253	1
214607	06853	134	1
214913	06853	151	7
215A010	99185	169	6
215N114F1	27315	103	5
215N131F1	27315	90	31
215N131F1	27315	93	31
215N135F1	27315	91	38
215T54	27315	103	14
215T6	27315	86	3
215T66	27315	103	27
215T79	27315	97	23
215T79	27315	97	28
215757	12603	207	9
216J19	27315	86	42
216N102	27315	103	32
216N128D1	27315	10	10
216N128D2	27315	10	9
216N143	27315	101	21
216P249	27315	84	21
216P312	27315	87	46
216P37D1	27315	13	32
216P375	27315	13	37
216P376D1	27315	13	36
216P376D2	27315	13	28
216P377D1	27315	13	33
216P377D2	27315	13	29
216T112	27315	89	14
216T30	27315	89	25
216T30	27315	97	34
216T310	27315	103	13
216T442	27315	16	9
216T56	27315	82	42
216T595	27315	97	52
216T611	27315	91	1
216T615	27315	16	13
216T616	27315	10	8
216T626	27315	8	21
21662	10989	174	7
216998	62983	172	3
218T163	27315	83	13
218T217	27315	90	8

PART NUMBER	FSCM	FIG. NO.	ITEM NO.
218T217	27315	93	8
218T217	27315	102	10
218T309	27315	103	28
218T418	27315	103	31
218T511	27315	85	19
218T51302	27315	87	5
218T51303	27315	85	1
218T51306	27315	85	30
218T51307	27315	85	7
218T51308	27315	85	8
218T53	27315	85	9
218T53	27315	87	9
218T550	27315	97	27
218T550	27315	97	32
218T588	27315	90	33
218T588	27315	93	33
218T597	27315	8	22
218T616	27315	9	35
218745	15434	219	19
218746	15434	219	21
218905	15434	251	1
219P101	27315	9	2
219P93	27315	2	12
219P94	27315	2	2
219P95	27315	11	8
219T120	27315	90	5
219T174	27315	109	17
219T209	27315	91	10
219T213	27315	91	14
219T233	27315	97	18
219T274	27315	10	2
219T28401	27315	101	8
219T28402	27315	101	6
219T85	27315	95	2
219T85	27315	96	2
22-2115-00	04710	23	45
220C056	99185	169	12
220N5	27315	10	11
220P177	27315	86	19
220P178	27315	89	9
220P180	27315	109	22
220P186	27315	88	23
220P187	27315	88	22
220P188	27315	88	18
220P189	27315	88	11
220P193	27315	17	24
220P193	27315	17	56
220P193	27315	19	17
220P193	27315	19	52
220P193	27315	21	7
220P193	27315	21	24
220P194	27315	10	3
220P204	27315	101	12
220T156	27315	90	9
220T156	27315	93	9
220T156	27315	102	11
220T19	27315	11	7
220T29	27315	86	14
220T30	27315	86	15
220T304F1	27315	91	15
220T330	27315	97	9
220T345	27315	91	30
220T384	27315	20	8
220T389	27315	94	43
220T41501	27315	88	5
220T416	27315	101	17
220531	21450	278	5
220636	06853	147	1
220636	06853	149	1
2225P-8	87373	192	8
222797	06853	148	33
223T231F1	27315	18	39
22506-801	71044	270	22
22525-801	71044	270	20
227N15	27315	82	15
227N233F1	27315	19	15
227P173	27315	97	38
227P247	27315	20	38
227P248	27315	20	39
227P270F1	27315	18	42
227T208	27315	18	8
227T219	27315	20	32
227T220	27315	20	31
227T222	27315	19	46
227T225	27315	18	16
227265	12603	200	3
227703	06853	144	
229N31	27315	2	10
229502	06853	148	
230A095	99185	169	4
230401	06853	138	10
230401	06853	154	12
230402	06853	146	3
230576	06853	147	75
230661	62983	175	1
230661	62983	179	3
232T7	27315	82	23
232510	73370	251	
232799	62983	175	2
232799	62983	179	4
233057	06853	145	8
23308-801	71044	270	32
233410	06853	154	20
233955	06853	148	34
234305	06853	137	8
234333	06853	137	3
234840	06853	137	4
2358087	99185	169	2
235212	06853	148	1
235474	62983	175	6
235729	06853	137	5
235816	73370	252	16
235829	06853	148	21
236288	06853	148	5
236640	06853	151	5
236728	06853	142	5
236980	06853	148	12
236982	06853	148	7
237990	06853	144	1
237992	06853	144	5
237994	06853	144	2
238179	06853	144	4
238379	06853	138	1
238379	06853	154	1
23838-801	71044	270	2
238413	06853	154	10
238474	06853	148	4
238501	06853	138	7
238686	06853	137	7
238687	06853	137	6
238888	06853	148	2
238956	06853	142	2
239136	06853	148	31
239139	06853	142	6
23916-6-8	99103	28	11
239315	06853	138	3
239330	06853	154	16
239357	06853	154	3
239383	06853	138	8
239383	06853	153	5
239476	06853	148	22
239615	06853	148	25
239627	06853	148	29
239633	06853	148	36
239640	06853	148	16
239643	06853	148	20
239645	06853	148	28
239668	06853	148	13
2397-6ZT	60703	131	11
239708	06853	148	23
239713	06853	148	17
239737	06853	148	26
239766	62983	175	3
239766	62983	179	5
239773	06853	151	6
239979	06853	148	32
24-33	70281	276	73
24PSB	80368	7	26
24008V002	27315	92	3
2401V038	27315	89	20
240273	06853	138	13

PART NUMBER	FSCM	FIG. NO.	ITEM NO.
240273	06853	154	14
240276	06853	154	15
240277	06853	138	12
240277	06853	154	
240283	06853	138	6
240285	06853	138	14
2403V006	27315	86	17
240381	06853	138	16
240381	06853	154	19
2404V004	27315	35	20
240480	06853	138	9
240480	06853	154	9
240517	06853	150	4
240542	06853	146	6
240543	06853	146	7
240580	06853	138	15
2408V001	27315	94	45
2408V002	27315	94	48
240905	06853	143	5
240906	06853	143	3
240907	06853	143	4
240908	06853	143	2
240909	06853	143	1
240960	06853	148	30
241556	06853	137	1
241559	06853	148	18
2416V023	27315	89	23
241828	06853	137	10
241829	06853	137	9
241830	06853	137	2
241850	06853	146	11
241851	06853	146	4
241851	06853	146	10
241852	06853	146	9
241853	06853	146	5
241855	06853	146	2
241856	06853	146	1
241866	06853	138	2
241887	06853	151	1
2419V041	27315	92	5
2419V041	27315	94	49
241910	06853	151	11
241910	06853	151	12
241911	06853	151	9
241912	06853	151	8
241914	06853	151	4
241916	06853	151	3
241952	06853	151	2
2420V105	27315	34	24
2420V121	27315	35	21
242094	06853	148	8
242109	06853	148	24
242141	06853	142	8
242221	06853	142	7
2423V001	27315	86	32
2423V001	27315	87	28
2423V001	27315	94	46
242391	06853	151	10
242393	06853	146	8
242952	06853	154	13
243011	06853	148	19
243019	06853	148	15
243633	06853	154	18
243634	06853	154	11
243635	06853	154	8
243636	06853	154	17
243637	06853	154	5
243638	06853	154	6
243824	06853	155	16
243937	06853	142	4
243939	06853	142	1
243940	06853	142	3
244T1	27315	86	18
244567	06853	138	4
244586	06853	148	27
244629	06853	153	2
244631	06853	153	3
245186	06853	154	2
245570	06853	148	14

PART NUMBER	FSCM	FIG. NO.	ITEM NO.
245704	06853	138	17
245704	06853	153	18
245720	06853	148	9
246226	06853	134	4
246573	06853	148	35
25-2100J363-2	27315	82	10
250-1-2	14959	22	10
250-1-2	14959	28	9
250A001-116	99185	169	10
250A003-914	99185	169	3
250B022-116	99185	159	9
250ZJ017	70281	276	43
25000-3	92863	184	21
2502H106	78252	276	7
2502H106-2	70281	276	6
2502H139	70281	276	24
2502J017	70281	276	36
2502P117	78252	276	74
2504S006	70281	276	15
2504S006-1	70281	276	14
2505D005	70281	276	91
2530V007	70281	276	39
2530V007X45-5-16	70281	276	62
2531V024	70281	276	35
2531V042	70281	276	21
2532V008	70281	276	28
2532V008	70281	276	31
2533P001	70281	276	41
25690-801	71044	270	10
25770-806	71044	270	3
25775-801	71044	270	8
25777-801	71044	270	11
25779-801	71044	270	5
25789-802	71044	270	19
25790-802	71044	270	18
25810-801	71044	270	33
258264	15434	250	
259101	62983	179	6
25989-801	71044	270	12
25996-806	71044	270	47
25998-502	71044	270	46
25998-503	71044	270	45
26-100J4329	27315	22	9
26E12	12603	258	68
26E12	12603	260	68
26020-801	71044	270	4
262395	62983	181	3
26445-802	71044	270	30
265A009-093	99185	169	8
266A500-007	99185	169	5
267A517-002	99185	169	7
2677G	73793	85	
2677G	73793	85	5
2677G	73793	87	12
26827-801	71044	270	31
26900-2500	92863	187	5
26900-2500	92863	187	6
26900-2500-	92863	187	
26900-2500-1	92863	187	9
26900-2500-2	92863	187	4
26900-2500-5	92863	187	3
26900-2500-6	92863	187	1
26900-2500-7	92863	187	2
26900-2500-8	92863	187	7
26900C2500-1	92863	188	11
26900C2500-2	92863	188	6
26900C2500-4	92863	188	7
26900C2500-5	92863	188	5
26900C2500-6	92863	188	3
26900C2500-7	92863	188	4
26900C2500-8	92863	188	9
26988-801	71044	270	13
27J1358	27315	21	46
27J1359	27315	19	10
27J1360-1	27315	19	5
27J1371	27315	17	66
27J1372	27315	21	39
27J1373	27315	20	18
27J1374	27315	20	19
27J1375	27315	19	77

PART NUMBER	FSCM	FIG. NO.	ITEM NO.
27J1376	27315	20	5
27J1377	27315	18	23
27J1380	27315	20	43
27J1381	27315	20	42
27J1384-1	27315	17	38
27J1385-1	27315	17	67
27J1386	27315	17	49
27J1388	27315	19	32
27J1390	27315	18	38
27J1837-1	27315	17	5
27J1839	27315	19	78
27N2643	27315	19	50
27N2646	27315	17	17
27N2647	27315	21	22
27N264801	27315	21	5
27N2649	27315	18	7
27N2650	27315	23	6
27N2671	27315	23	26
27N2678	27315	20	20
27N2679	27315	20	21
27N2682-1	27315	17	22
27N2682-2	27315	17	54
27N2683	27315	27	3
27P2427F1	27315	12	
27P2620	27315	17	16
27P2659	27315	27	14
27P2666	27315	23	71
27P2668	27315	23	
27P2669	27315	109	28
27P2670	27315	109	31
27P2701	27315	19	67
27P2702	27315	19	66
27P2703	27315	19	68
27P2704D1	27315	20	36
27P2704D2	27315	20	37
27P2712	27315	19	35
27P2715	27315	19	81
27Q58	27315	195	11
27Q59	27315	195	5
27Q60	27315	18	3
27Q61	27315	18	5
27Q62	27315	18	1
27T1767	27315	23	53
27T1774	27315	21	49
27T1777	27315	17	39
27T1778	27315	19	43
27T1779	27315	19	40
27T1780	27315	19	41
27T1781	27315	19	38
27U100	27315	27	11
27U95	27315	195	24
27Z406D1	27315	18	7
27Z406D1	27315	18	14
27Z406D1	27315	19	72
27Z406D3	27315	19	70
27Z406D4	27315	18	12
27Z406D7	27315	18	4
27Z406D8	27315	18	2
27Z407D1	27315	18	13
27Z407D1	27315	19	71
27Z407D3	27315	19	69
27Z407D4	27315	18	11
27Z408D1	27315	18	29
27Z410D1	27315	18	28
27Z652	27315	27	10
27Z671	27315	23	8
27Z672D3	27315	21	17
27Z672D3	27315	21	34
27Z674	27315	20	22
27010001	70281	276	11
27040-801	71044	270	51
2714	62983	181	5
2715	62983	181	6
27159-802	71044	270	23
27160-802	71044	270	24
27191-801	71044	270	7
27193-801	71044	270	35
27194-801	71044	270	44
273436	72582	49	16
273436	72582	49	20
277000	06853	137	
277227	06853	151	
2778[illegible]4	06853	148	
27901-001	71044	270	1
279828	06853	148	6
28-978	70281	276	99
282541	06853	148	
282884	06853	144	6
2830A	61208	40	63
28346-802	71044	270	50
2858161	99185	169	11
2861	98440	193	28
28630-502	71044	270	49
28630-503	71044	270	48
2876-14	98440	34	11
2876-15	98440	34	10
2877-1	98440	34	12
28776-801	71044	270	28
2879-9	98440	34	13
29NU101	72962	13	4
29NU101	72962	13	27
29NU101	72962	13	35
29N466	27315	11	28
2906P1F1	27315	19	
2915J43-5	27315	103	
2915J72-2	27315	88	
2915N13-4	27315	103	19
2915N13F4	27315	84	
2915N20F1	27315	86	23
2915N20F1	27315	87	27
2920	98440	34	4
298126	62983	173	9
3-27P2668	27315	23	52
3-4X1-2PTRB	30780	191	60
3-4X3-8PTRS	30780	177	10
3-906N34	27315	17	29
3-906N34	27315	17	61
3-906N34	27315	21	12
3X1027	40342	157	4
3X298138	62983	173	1
30-437	70281	276	16
30-586	70281	276	38
30-587	70281	276	42
30-588	70281	276	83
30-590	70281	276	75
30-596	70281	276	63
30X15	40342	157	1
30X64	40342	157	12
300X5	79470	82	20
300001	09704	25	14
300002	09704	25	7
300003	09704	25	9
300011	09704	25	15
300088	09704	25	27
300097	09704	25	
300098	09704	25	
300216	09704	25	23
300290	70720	82	11
30064-801	71044	270	37
3029	93784	83	11
303	24455	7	34
306	96509	1	4
31-115	14917	276	48
31015-801	71044	270	9
3146695	27462	64	5
319C20	96509	1	14
32N137	27315	109	42
32P366	27315	17	11
32Q23108	27315	34	22
32Q26201	27315	9	48
32Q26403	27315	9	49
32Q26405	27315	9	39
32Q431D19	27315	191	1
32Q431D19	27315	191	23
32Q43106	27315	191	12
32Q432	27315	277	3
32Q433D1	27315	273	40
32Q433D10	27315	273	37

PART NUMBER	FSCM	FIG. NO.	ITEM NO.
32Q433D12	27315	273	33
32Q433D13	27315	273	30
32Q433D18	27315	273	34
32Q433D3	27315	273	35
32Q433D4	27315	273	32
32Q433D5	27315	273	29
32Q433D6	27315	273	39
32Q433D7	27315	273	31
32Q433D9	27315	273	38
32Q435	27315	277	49
32Q436	27315	277	2
32Q437	27315	268	84
32Q438D3	27315	267	67
32Q441	27315	277	4
32Q443	27315	268	83
32Q444	27315	268	32
32Q445	27315	186	22
32Q449-D32	27315	182	44
32Q449-D32	27315	182	75
32Q450-D100	27315	182	70
32Q450-D100	27315	182	129
32Q450-D123	27315	182	17
32Q450-D98	27315	182	38
32Q450-D98	27315	182	54
32Q450-D98	27315	182	86
32Q450-D98	27315	182	99
32Q450-D98	27315	182	116
32Q450D75	27315	193	6
32Q457	27315	268	137
32Q466	27315	109	45
32Q467D3	27315	9	38
32Q468	27315	109	46
32Q469	27315	109	47
32Q470	27315	109	48
32Q471	27315	109	49
32Q472D1	27315	19	42
32Q472D2	27315	19	39
32Q483	27315	35	3
32Q484	27315	109	51
32U1123	27315	109	53
32U586	27315	88	42
32U971	27315	277	47
32U974	27315	37	28
32U975	27315	109	50
32U977	27315	109	52
32Z1027	27315	8	15
32Z1318	27315	7	21
32Z1442	27315	273	23
32Z1445	27315	268	117
32Z1446	27315	268	119
32Z1447	27315	268	82
32Z1449	27315	268	66
32Z1465	27315	23	38
32Z1469	27315	7	6
32Z1470D1	27315	7	7
32Z1470D2	27315	7	8
32Z875D14	27315	13	46
32Z875D17	27315	16	11
3202615	72582	45	14
320569	72582	49	28
33C216	41625	36	34
3325-8X6	14770	192	9
34	71177	85	14
34	71177	86	2
3400X4	79470	132	19
34044-001	71044	270	6
34115	82271	166	14
342224	62983	173	24
342226	62983	173	21
342228	62983	173	11
342229	62983	173	10
342232	62983	173	25
342233	62983	173	23
35	71177	95	18
35	71177	96	18
350003-801	71044	270	15
35070	73370	252	15
351119-801	71044	270	40
351152-801	71044	270	43
351199-001	71044	270	52
352167	62983	172	5
353019-801	71044	270	14

PART NUMBER	FSCM	FIG. NO.	ITEM NO.
353024-801	71044	270	39
353031-801	71044	270	34
353042-801	71044	270	16
353043-801	71044	270	38
359858	62983	173	15
359861	62983	173	16
359861	62983	173	17
36	71177	88	
36-2100J363-2	27315	82	12
36Z38	27315	34	25
3612V006	27315	87	10
361211	34161	229	30
3615V041	27315	97	16
36212	62983	173	5
3631V008	27315	17	26
3631V008	27315	17	58
3631V008	27315	19	19
3631V008	27315	21	9
3631V008	27315	21	26
365	60703	131	2
366	60703	131	3
37L11-18	71286	18	27
374	38797	19	48
38Z208	27315	90	19
38Z208	27315	91	19
38Z208	27315	93	19
38Z208	27315	95	10
38Z208	27315	96	10
38Z208	27315	102	19
38Z209	27315	84	
388350	62983	173	14
39TB3	27315	113	57
39X4	45681	180	1
39Z56	27315	86	29
39Z56	27315	87	37
4-818N36	27315	124	3
4CG03-10S1	62983	173	
4M6ZMB	70434	192	11
4Q44-D6	27315	182	96
4R6BXS	45681	136	33
40MGR	13548	113	48
40MGR	13548	121	13
40MGR	13548	122	13
40010	27315	178	74
40Q8	27315	178	41
40U11	27315	178	46
400X4	79470	97	37
400X5	79470	82	7
400X5	79470	86	16
400X5	79470	94	44
4003	09605	83	10
4004	93784	83	9
4005	93784	83	7
4006	93784	83	6
4007	93784	83	
40073	81263	273	8
4008	93784	83	3
4009	93784	83	5
40097	81263	273	7
4010	93784	83	2
401081	77640	125	4
4011	93784	83	4
4012	93784	83	1
4013	93784	83	8
402-12	13548	121	12
402-12	13548	122	12
40209Y	13458	113	47
4029	93784	83	12
4030A	93784	82	38
4030A	93784	83	
40335	18882	276	26
411-34	43766	19	59
4110-1	10203	186	12
42C15120-205	00000	278	6
42X4	79470	136	29
42X4	79470	136	37
42X4	79470	145	22
42X4	79470	145	34
42X4	79470	145	38
42X4	79470	145	42

PART NUMBER	FSCM	FIG. NO.	ITEM NO.
42X6	79470	132	42
42X6	79470	147	14
42X6	79470	147	26
42X6	79470	149	34
42X6	79470	152	24
42X6	79470	152	43
42X6	79470	152	53
42X6	79470	152	57
42X6	79470	156	30
42065-041	71044	270	41
42198	81263	273	4
42372-003	71044	270	26
42375-004	71044	270	27
42591-001	71044	270	53
42829-002	71044	270	
438288	15434	224	1
44P1D129	27315	82	28
44P1D132	27315	82	29
44P1D134	27315	82	30
44P1D30	27315	82	17
44P1D36	27315	82	31
44P1D46	27315	82	24
44P1D65	27315	82	16
44P1D66	27315	82	32
44P1D67	27315	82	25
44P1D72	27315	82	26
44P1D90	27315	82	27
44P1D97	27315	82	5
44P1397D1	27315	32	28
44P1397D2	27315	32	21
44P1397D3	27315	32	27
44P1400	27315	22	12
44P183D1C	27315	82	34
44P183D10	27315	97	35
44P183D14	27315	89	27
44P473D8	27315	32	32
44P473D9	27315	32	30
440158D8	27315	191	35
440204	27315	152	19
440204	27315	156	24
440205	27315	182	180
440208D2	27315	147	60
440214D1	27315	156	9
440214D2	27315	152	11
440214D3	27315	152	13
440214D9	27315	136	
440215D6	27315	174	22
440216D6	27315	177	29
440217-D5	27315	182	10
440217-D5	27315	182	64
440217D6	27315	171	30
440217D6	27315	177	16
440217D6	27315	182	14
440217D8	27315	156	16
440219D1	27315	254	52
440219D2	27315	132	14
440219D2	27315	149	28
,40221D1	27315	152	2
440221D2	27315	254	51
440221D2	27315	254	56
440222D1	27315	158	54
440222D10	27315	174	64
440222D11	27315	158	63
440222D12	27315	158	62
440222D13	27315	158	75
440222D14	27315	158	74
440222D15	27315	182	16
440222D2	27315	158	53
440222D3	27315	158	15
440222D4	27315	158	14
440222D5	27315	158	36
440222D6	27315	158	37
440222D7	27315	158	22
440222D8	27315	158	23
440222D9	27315	174	65
440223-7	27315	192	2
440223D5	27315	163	23
440223D6	27315	177	28
440223D8	27315	178	60
440224-D27	27315	182	144

PART NUMBER	FSCM	FIG. NO.	ITEM NO.
440224-D27	27315	182	176
440224-D28	27315	182	149
440224-D29	27315	182	178
440224D12	27315	171	37
440224D12	27315	174	43
440224D12	27315	177	30
440224D29	27315	168	18
440224D30	27315	178	15
440235D2	27315	149	58
440235D3	27315	152	9
440235D4	27315	152	7
440236D35	27315	192	15
440238D15	27315	147	55
440238D15	27315	149	5
440239-D7	27315	182	23
440239D6	27315	182	167
440240-D6	27315	182	153
440240-D6	27315	182	161
440240-D7	27315	182	21
440241-D6	27315	182	168
440241D3	27315	171	36
440241D3	27315	177	11
440243-D1	27315	182	31
440248D20	27315	160	36
440258D1	27315	140	
440258D2	27315	140	
440259D1	27315	168	3
440259D2	27315	168	2
440261D3	27315	177	7
440263D1	27315	177	17
440264D1	27315	184	
440265D1	27315	182	25
440266D2	27315	163	40
440267	27315	182	146
440268D1	27315	182	141
440269	27315	182	175
440270D1	27315	168	25
440271D1	27315	163	16
440271D10	27315	163	6
440271D2	27315	163	17
440271D3	27315	163	31
440271D5	27315	163	8
440271D6	27315	163	7
440271D7	27315	163	14
440271D8	27315	163	15
440271D9	27315	163	1
440273D1	27315	177	
440273D2	27315	254	21
440273D3	27315	177	
440273D4	27315	171	32
440273D5	27315	177	21
440273D6	27315	174	9
440273D7	27315	174	8
440273D8	27315	174	2
440274D1	27315	174	39
440275D1	27315	171	33
440275D2	27315	177	14
440275D3	27315	171	9
440275D4	27315	174	18
440275D5	27315	174	19
440275D6	27315	174	4
440275D7	27315	174	3
440275D8	27315	178	51
440275D8	27315	254	7
440275D9	27315	254	4
440276D1	27315	160	24
440276D2	27315	254	40
440276D9	27315	254	34
440276D9	27315	254	18
440277D1	27315	254	1
440278D2	27315	160	53
440280	27315	182	151
440280	27315	182	157
440280D1	27315	174	45
440280D11	27315	160	47
440280D2	27315	178	61
440280D3	27315	178	66
440280D5	27315	182	162
440280D6	27315	182	169
440281D1	27315	178	3

PART NUMBER	FSCM	FIG. NO.	ITEM NO.
44Q28201	27315	160	34
44Q28202	27315	178	59
44Q28203	27315	168	9
44Q28204	27315	178	58
44Q28601	27315	174	24
44Q28602	27315	174	25
44Q28603	27315	174	21
44Q28604	27315	174	20
44Q28605	27315	177	
44Q28606	27315	171	28
44Q28607	27315	171	27
44Q28608	27315	174	1
44Q28701	27315	182	106
44Q28702	27315	182	120
44Q28703	27315	182	45
44Q28704	27315	182	58
44Q28705	27315	182	90
44Q288	27315	182	133
44Q28901	27315	182	77
44Q292D12	27315	160	
44Q2940	27315	192	19
44Q2950	27315	192	1
44Q31101	27315	132	9
44Q32901	27315	160	54
44Q34701	27315	254	17
44Q34701	27315	254	23
44Q34701	27315	254	37
44Q44011	27315	182	67
44Q44011	27315	182	72
44Q44011	27315	182	126
44Q44011	27315	182	131
44Q44015	27315	158	19
44Q4406	27315	182	35
44Q4406	27315	182	40
44Q4406	27315	182	51
44Q4406	27315	182	56
44Q4406	27315	182	83
44Q4406	27315	182	88
44Q4406	27315	182	101
44Q4406	27315	182	113
44Q4406	27315	182	118
44Q47-D11	27315	182	65
44Q47-D11	27315	182	124
44Q47-D6	27315	182	33
44Q47-D6	27315	182	49
44Q47-D6	27315	182	81
44Q47-D6	27315	182	111
44Q47D13	27315	171	15
44Q47D17	27315	178	57
44T374D50	27315	28	2
44T375D12	27315	22	14
44T375D27	27315	22	13
44T37601	27315	26	4
44T37604	27315	26	6
44T377019	27315	26	7
44U300433	27315	113	59
44U3304	27315	192	17
44U36018	27315	152	31
44U36019	27315	156	27
44X6	79470	149	48
44X6	79470	152	62
44Z1-010	27315	263	3
44Z1065	27315	98	22
44Z1065	27315	99	2
44Z104004	27315	147	774
44Z104901	27315	82	47
44Z104902	27315	82	43
44Z104903	27315	82	44
44Z104904	27315	82	45
44Z104905	27315	82	46
44Z118406	27315	34	26
44Z1204	27315	23	1
44Z149701	27315	191	56
44Z149704	27315	191	13
44Z149706	27315	191	2
44Z149706	27315	191	8
44Z149706	27315	191	29
44Z149805	27315	191	24
44Z150002	27315	168	14
44Z1501011	27315	168	26
44Z150204	27315	152	51

PART NUMBER	FSCM	FIG. NO.	ITEM NO.
44Z208D15	27315	191	58
44Z209D2	27315	23	5
44Z209D3	27315	23	13
44Z209D5	27315	23	3
44Z209D6	27315	23	4
44Z215019	27315	191	59
44Z275D3	27315	145	26
44Z371D6	27315	191	18
44Z375D9	27315	22	6
44Z421D3	27315	163	52
44Z421D6	27315	158	40
44Z421D6	27315	158	66
44Z421D6	27315	160	30
44Z421D6	27315	163	4
44Z486-D6	27315	254	10
44Z536-D4	27315	182	135
44Z60204	27315	149	57
44104	82271	166	6
446125-250	57733	206	1
44614-001	71044	270	54
44618-001	71044	270	42
446914	73331	116	6
4494	01943	206	5
45X6	79470	152	22
45X6	79470	152	35
45Z344	27315	97	5
450029	77640	125	2
450066	77640	125	1
450157	77640	125	
450865	72582	58	15
451015	21450	219	10
453077	77640	125	9
453077-A1	77640	125	
454082	77640	125	7
454906	72582	43	11
45933	81263	273	3
45935	81263	273	5
465530	77640	125	
47-100J4314	27315	28	13
47200	57733	92	24
47200	57733	94	7
47200	57733	94	21
48-100J4314	27315	28	12
48U30	27315	25	
48X4X4	79470	145	4
48X4X4	79470	145	46
48X6X2	79470	152	26
48X6X2	79470	152	45
48X6X2	79470	152	55
48X6X2	79470	152	60
48X6X2	79470	152	64
48X6X6	79470	147	35
48X6X6	79470	147	48
48X6X6	79470	147	57
48X6X6	79470	147	63
48X6X6	79470	147	69
48X6X6	79470	152	32
48X6X6	79470	152	40
48X6X6	79470	156	49
48X6X6	79470	254	57
48X6X8	79470	147	5
48X6X8	79470	147	30
48X6X8	79470	147	46
48X6X8	79470	147	68
48X6X8	79470	149	10
48X6X8	79470	149	21
48X6X8	79470	152	16
48X6X8	79470	152	30
48X8X8	79470	149	22
4812	81263	38	15
4812	81263	273	
4873L	19220	17	65
4873R	19220	17	33
4873R	19220	19	26
4873R	19220	21	16
4873R	19220	21	33
49F1-2X1-2	30327	147	73
49X10	79430	156	13
49X10X6	79470	152	27

PART NUMBER	FSCM	FIG. NO.	ITEM NO.
49X4	79470	192	18
49X4X4	79470	152	12
49X4X4	79470	152	14
49X6X2	79470	140	8
49X6X2	79470	149	39
49X6X2	79470	149	45
49X6X2	79470	192	3
49X6X2	79470	192	20
49X6X6	79470	156	42
49X6X8	79430	156	20
49X6X8	79470	132	35
49X6X8	79470	149	31
5E10	12603	258	65
5E10	12603	260	65
5Q9-D10	27315	182	165
5Q9-D13	27315	182	20
5Q9-D14	27315	182	143
5Q9-D14	27315	182	148
5T1586	27315	85	
5T1586	27315	85	
5T1586	27315	85	6
5T1586	27315	87	14
5T1789	27315	102	7
5Z279	27315	11	14
5Z343D27	27315	191	15
50P2F1	27315	8	10
500CA	38797	7	17
5000057	09704	25	22
500006	09704	25	26
500036	09704	25	21
500056	09704	25	17
50019	82271	166	3
50020	82271	166	1
50020	82271	166	10
50021	82271	166	5
50022	82271	166	8
50022	82271	166	16
50023	82271	166	
500357-12	95019	39	2
500371-4	72447	39	3
5005864	19207	278	3
50168-2	95019	39	12
5033	36251	270	36
5033-1600	80538	15	22
5033-1600	80538	271	22
506882	19207	278	7
507266	80538	15	17
507266	80538	271	17
508	96509	1	1
51X20	40342	157	26
51X209	40342	157	16
5100104	72582	67	1
5101-100	79136	95	1
5101-100	79136	96	1
51089207	72582	27	15
5109158	72582	27	16
5109167	24617	57	2
5109252	72582	60	1
5109621	72582	60	3
5109707	72582	72	3
5111904	72582	49	19
51122899	72582	57	10
5112787	72582	49	11
5114727	72582	49	10
5114974	72582	49	13
5116092	72582	64	4
5116204	72582	68	1
5116242	72582	64	11
5116242	72582	72	4
5116265	72582	68	15
5116266	72582	68	14
5116267	72582	68	13
5116357	72582	61	6
5116383	72582	49	23
5116391	72582	60	10
5116392	72582	60	8
5116445	72582	49	18
5116457	72582	49	21
5116483	72582	63	6
5118219	72582	48	1
5119006	72582	57	9

PART NUMBER	FSCM	FIG. NO.	ITEM NO.
5119246	72582	64	14
5119379	72582	71	5
5119425	72582	64	18
5119476	72582	52	1
512	96509	1	2
5120740	72582	58	4
5121062	72582	60	2
5121148	72582	61	5
5121205	72582	58	21
5121228	72582	64	3
5122195	27315	31	11
5122623	72852	49	14
5123247	72582	64	10
5123740	71934	45	11
5123762	72582	53	2
5123878	72582	53	5
5124240	72582	45	13
5125353	72582	67	2
5126868	72582	63	16
5127510	72582	32	13
5127911	72582	32	25
5128139	72592	64	15
5129750	72582	71	2
5130281	72582	49	
5131913	72582	43	2
5131967	72582	42	1
5132147	72582	43	8
5132601	72582	63	5
5133063	72582	63	9
5133107	72582	66	13
5133108	72582	32	2
5133286	72582	79	27
5133431	72582	58	18
5134392	72582	58	
5134477	72582	58	17
5134908	72582	58	20
5135031	72582	65	1
5136414	72582	64	20
5136498	72582	65	11
5136500	72582	65	12
5136692	72582	43	5
5142549	72582	49	7
5142549	72582	64	24
5143344	72582	53	3
5143836	72582	49	12
5144093	72582	55	32
5144503	72582	66	5
5144702	72582	64	23
5144920	72582	66	3
5145009	72582	66	4
5145010	72582	49	22
5145011	72582	46	5
5145014	72582	64	9
5145238	72582	57	1
5145904	72582	63	3
5146238	72582	49	33
5146723	72582	63	4
5147006	72582	43	10
5147007	72582	43	13
5147506	72582	67	3
5147833	72582	45	
5148276	72582	43	4
5148442	72582	66	
5148444	72582	65	7
5148776	72582	45	10
5150193	72582	48	18
5150829	72582	60	7
5152138	72582	68	2
5154538	72582	58	13
5157244	72582	49	2
5163918	72582	60	9
5164294	72582	63	12
5164294	72582	71	3
5164789	72582	32	3
5166265	72582	55	33
5169721	72582	64	22
5171045	72582	53	6
5178595	72582	32	8
5179382	72582	57	8
518258	33525	271	20

PART NUMBER	FSCM	FIG. NO.	ITEM NO.
5182977	72582	49	15
5184301	72582	64	19
5185800	72582	31	7
5186749	72582	53	7
5186784	24617	46	10
5186840	72582	64	21
5187308	72582	58	14
5187309	72582	58	11
5187310	72582	58	12
5188273	72582	57	6
518988	81263	273	6
5196054	72582	49	1
5196054	72582	49	24
5198303	72582	58	
5199534	72582	66	
5199560	72582	48	
5199575	72582	32	11
5199575	72582	32	17
5199579	72582	32	10
5199579	72582	32	15
5199588	72582	32	16
5199593	72582	32	9
5201-228-101	72765	38	4
5214539	19207	86	38
5214539	19207	87	44
5226029	72587	68	3
526427	33525	15	16
526427	33525	271	16
526853	33525	15	7
526853	33525	15	11
526853	33525	271	7
526853	33525	271	11
526921	80538	15	13
526921	80538	271	13
527259	33525	15	9
527259	33525	271	9
527486	33525	15	8
527486	33525	15	12
527486	33525	271	8
527486	33525	271	12
528275	33525	15	25
528275	80538	271	25
528277	33525	15	14
528277	33525	271	14
528278	33525	15	15
528278	33525	271	15
528280	33525	15	18
528280	33525	271	18
5284911	19207	82	
5284911	19207	82	
5284911	19207	82	
5284911	19207	82	
5284911	19207	82	
5284911	19207	82	
5284911	19207	82	
5284911	19207	82	18
5284911	19207	82	33
5284911	19207	94	42
5310675	00000	115	10
54X4	79470	140	20
542A	96509	1	7
55X4	79470	136	20
55X4	79470	152	41
55X6	79470	147	11
552A	96509	1	6
5570480	72582	58	6
5571024	72582	58	9
5573263	72582	46	10
5573949	72852	46	
5574008	72582	58	7
5574118	72582	46	7
5574120	72582	46	12
5574122	72582	46	15
5574123	72585	46	13
5574124	72582	46	16
5574125	72582	46	11
5574126	72585	46	14
5574161	72582	46	9
5574161	72582	47	8
5574736	72582	58	16
5574961	72582	47	10

PART NUMBER	FSCM	FIG. NO.	ITEM NO.
5577586	72582	47	12
56-0304-0	78422	14	9
560401	27315	273	13
560401	27315	273	15
560402	27315	273	19
56128	81646	17	9
562050	45681	180	2
563	96509	1	8
5657283	72582	45	1
5659-10	99879	149	53
566-5	96509	1	10
5688	19220	19	55
571	96509	1	16
572	96509	1	13
5733-2	96509	1	15
575	96509	1	12
576366-5110	92863	188	8
581184	02280	268	65
590219	00000	278	8
5931947	73331	13	19
5931949	73331	13	20
5932071	73331	13	23
5949701	73331	13	22
5949719	73331	13	21
6	71177	88	3
6-27J1376	27315	20	6
6-818N36	27315	124	6
6P2446	27315	40	4
6Q9002	27315	117	8
6Q9102	27315	267	44
6Q9104	27315	267	17
6T2496	27315	11	10
6T2497	27315	23	50
6T2498	27315	23	51
6X1-4	70281	276	20
6X1-4	70281	276	27
6X1-4	70281	276	32
621	27315	80	10
62326	27315	19	58
60-36397-28	77820	111	4
600375	40342	157	11
600399L	40342	157	17
600792	40342	157	15
600794	06721	157	29
600857	40342	157	30
600894	40342	157	27
601019	40342	157	2
60470-001	71044	270	
60477-001	71044	270	
61-0157-0	78422	14	4
61-0216-0	78422	14	6
61-0229-0	78422	14	5
61-0230-0	78422	14	7
61-0231-1	78422	14	8
610139-1	33525	271	
610140	33525	15	2
610140	33525	271	2
610141	33525	15	10
610141	33525	271	10
610142	33525	15	
610142	33525	271	29
611105	33525	15	24
611105	80538	271	24
61153-001	71044	270	25
61554	15434	224	3
62010	03504	260	64
62010	12603	258	64
6312	98440	193	27
636	24455	38	2
6435048	72582	47	11
6435793	72582	47	6
6435794	70040	47	7
6436253	72582	47	5
6436254	72582	46	6
6437298	72582	58	5
6448	98440	34	20
6449-1	98440	34	27
64709	15434	229	18
6478819	72582	45	15
65434	15434	219	5

PART NUMBER	FSCM	FIG. NO.	ITEM NO.
655030	45681	180	4
659764	12603	260	59
665217	45681	180	9
676366-5110	92863	187	8
676366-5110	92863	188	10
67946	15434		
680922	02280	120	15
680922	02280	121	22
680922	02280	122	22
68190	15434	229	12
6820	79470	82	9
68274	15434	221	24
68647	77915	126	1
687	96509	1	9
688	96509	1	5
69187	15434	229	17
7-73-219	95019	39	1
7X116	40342	157	31
70-0122-23	04710	[illegible]3	47
7007-65	06853	147	51
7010-06	06853	134	
7012-09	06853	154	
7012-10	06853	153	
7016-03	06853	155	
7021-03	06853	142	
7021-15	06853	138	
7022-02	06853	148	
7022-05	06853	148	
7022-06	06853	148	
70225	92878	269	17
7023-01	06853	143	
7024-01	06853	146	
7044253	19207	278	10
70459	15434	240	27
70468	15434	229	11
7049603	19207	278	12
705	79470	86	12
7056674	81349	24	52
7056674	81349	24	53
7056674	81349	24	56
7056674	81349	24	57
7056674	81349	24	58
7056700	19207	111	201
7056702	19207	111	64
7056707	19207	111	79
7056708	19207	111	150
7056709	19207	111	50
7056709	19207	111	74
7056711	19207	111	44
7056715	19207	111	106
7056732	19207	111	102
707005	09704	25	16
707057	09704	25	11
707167	09704	25	20
707167	09704	25	25
707193	09704	25	24
707196	09704	25	6
707196	09704	25	8
707282	09704	25	13
707392	09704	25	18
707393	09704	25	19
7075	62983	173	8
72880	33525	15	1
725057K1	88853	9	30
726-1610	05381	271	21
730178	64104	52	3
730178	64104	89	26
7320641	19207	116	1
7320642	19207	116	2
7320658	19207	116	4
7326020	00000	116	3
7350572	19207	49	32
7350896	19207	147	45
7350896	19207	147	72
7350896	19207	152	3
7350896	19207	156	3
7355520	19207	111	105
73704	35510	44	17
75026-2ZY	60703	131	10
7525993	19207	113	34
7525993	19207	113	40
7526509	00000	113	37
7526509	00000	113	43
7526515	19207	113	36
7526515	19207	113	42
7526516	19207	113	33
7526516	19207	113	39
7530146	19207	115	6
75470-5ZY	60703	131	1
75704-1J	60703	131	19
761152Y	60703	131	13
76116-2	60703	131	18
7699767-1	81348	2	11
771	87730	276	71
77121-1	60703	131	15
77121-3ZY	60703	131	14
7714878	19207	278	
7714880	19207	278	11
7714881	19207	278	9
7714911	19207	278	14
7716793	19207	111	61
7720486	19207	111	48
7720490	19207	13	42
7722333	19207	111	53
7723309	19207	111	52
7764906	19207	278	15
78267	35510	44	5
78283	35510	44	3
790051	27315	13	
790415	27315	24	21
790416	27315	24	43
790417	27315	24	30
790420	27315	24	91
79U1121	27315	24	32
79U1122	27315	24	34
79U1123	27315	24	39
79U1127	27315	24	50
79U563-03	27315	111	209
79U572	27315	111	75
79Z1592	27315	13	
79Z2447	27315	111	205
79Z2447D1	27315	113	31
79Z2826	27315	24	35
79Z2827D1	27315	24	29
79Z2827D2	27315	24	33
79Z2828	27315	24	25
79Z2829	27315	24	31
79Z2830D1	27315	24	23
79Z2830D2	27315	24	22
79Z2831D1	27315	24	42
79Z2831D2	27315	24	26
79Z2831D3	27315	24	40
79Z2831D4	27315	24	41
79Z2831D5	27315	24	44
79Z2831D6	27315	24	24
79Z2831D7	27315	24	27
79Z2831D8	27315	24	28
79Z2832D1	27315	24	38
79Z2832D2	27315	24	37
79Z2833	27315	24	36
79Z2843	27315	24	46
79Z2844	27315	24	45
79Z2845	27315	24	47
79Z2846	27315	24	59
79Z2850	27315	24	60
79Z2852	27315	24	49
79Z2853	27315	24	48
799390	24617	86	40
799390	24617	87	42
8-10C50XS	30780	160	27
8-37-4	92985	158	57
8-37-4	92985	171	18
8-37-4	92985	174	11
8-37-4	92985	174	30
8-37-4	92985	177	34
8-37-4	92985	178	10
8-4CBTXS	30780	178	52
8-8FTXS	30780	178	9
8-8FTXS	30780	182	15
8FF5BXS	45681	254	45

PART NUMBER	FSCM	FIG. NO.	ITEM NO.
8MA10ZMB	70434	140	27
8P214	27315	11	27
8P240C1	27315	9	7
8T323	27315	104	46
8T95C1	27315	11	26
8T97C3	27315	9	6
8T97C3	27315	92	45
80Q65D1	27315	7	27
80Q65D2	27315	7	27
80Q65D3	27315	7	27
80Q65D4	27315	7	27
80Q65D5	27315	7	27
80Q65D6	27315	7	27
80Q65D7	27315	7	27
80Q65D8	27315	7	27
8027129	19207	79	28
8027129	19207	82	37
806P235	27315	267	7
806P236	27315	267	30
806T33	27315	267	25
806T342	27315	267	12
806T343	27315	267	26
808P9	27315	118	20
8100J0338	27315	267	
8100J0598	27315	191	
8100J0599	27315	182	
8100J1152	27315	196	
8100J1453	27315	126	
8100J3989	27315	158	
8100N0422	27315	195	
8100N0837	27315	194	
8100N174	27315	273	
8100N1951	27315	192	
8134SF	95019	39	
814P17	27315	268	88
814P18	27315	193	11
814P19	27315	149	38
814P20	27315	186	19
814P21	27315	111	86
814P22	27315	195	23
814P23	27315	195	22
814P24	27315	277	8
814P25	27315	111	94
814P26	27315	268	131
814P29	27315	277	70
814P32	27315	268	44
814P33	27315	195	15
814P35	27315	267	34
814T23	27315	268	93
816J84	27315	193	29
816J86	27315	113	75
816N257	27315	277	42
816N261	27315	268	135
816N262	27315	268	57
816N269	27315	268	17
816N271	27315	163	48
816N272	27315	268	20
816N273	27315	158	27
816P671	27315	267	11
816P673	27315	152	38
816P676	27315	147	20
816P677	27315	268	31
816P678	27315	268	70
816P680	27315	254	32
816P681	27315	267	29
816P682	27315	117	17
816T1291	27315	156	18
816T1293	27315	268	33
816T1295	27315	195	21
816T1296	27315	195	20
816T1297	27315	113	11
816T1298	27315	267	39
816T1299	27315	267	53
816T1300	27315	113	7
816T1301	27315	267	33
816427	02280	182	163
816427	02280	182	170
8169127	18876	32	29
818P174	27315	277	26
818P175	27315	277	27
818P186	27315	268	98
818P187	27315	254	66
818P188	27315	277	28
818P190	27315	113	19
818P191	27315	168	37
818T121	27315	37	8
818T564	27315	124	7
818T589	27315	140	4
818T593	27315	267	8
818T611D2	27315	267	60
818T611D3	27315	267	59
818T611D3	27315	267	61
818T613	27315	111	127
818T614	27315	113	14
819P32	27315	118	19
819T184	27315	124	4
819T185D2	27315	149	41
819T187	27315	267	48
819T189	27315	163	44
820N53	27315	145	
820N21	27315	191	30
820N24D1	27315	182	100
820N24D2	27315	182	117
820N24D4	27315	182	55
820N24D5	27315	182	87
820N25D2	27315	182	71
820N25D2	27315	182	130
820N27	27315	147	13
820N29D1	27315	174	53
820N29D2	27315	174	52
820N30	27315	174	54
820N31	27315	182	76
820N32	27315	147	10
820N34D1	27315	145	
820N34D2	27315	147	12
820N34D3	27315	149	35
820N34D4	27315	152	42
820N34D5	27315	152	63
820N34D7	27315	149	27
820N35D1	27315	174	35
820N35D2	27315	174	
820N36	27315	174	31
820N37	27315	174	29
820N38	27315	182	89
820N39D1	27315	145	
820N39D2	27315	136	
820N41	27315	152	23
820N42	27315	149	9
820N43	27315	152	52
820N44	27315	174	55
820N45	27315	160	3
820N46	27315	136	
820N47	27315	147	31
820N48	27315	171	16
820N49	27315	160	7
820N50	27315	160	40
820N51	27315	177	35
820N52	27315	174	12
820N54D1	27315	158	9
820N54D2	27315	158	28
820N54D3	27315	158	38
820N54D4	27315	158	18
820N54D5	27315	158	29
820N54D6	27315	158	39
820N56	27315	149	47
820N58	27315	182	18
820N59	27315	171	5
820N60	27315	136	
820N61	27315	182	39
820N63D2	27315	147	22
820N63D3	27315	147	21
820N63D4	27315	156	52
820N64D2	27315	147	16
820N64D3	27315	147	15
820N64D6	27315	152	15
820N65D2	27315	136	
820N66D1	27315	182	105
820N66D2	27315	182	119
820N66D3	27315	182	27
820N66D3	27315	182	41

PART NUMBER	FSCM	FIG. NO.	ITEM NO.
820N66D4	27315	182	57
820N67	27315	158	17
820N68D1	27315	158	34
820N68D2	27315	158	35
820N69D1	27315	158	52
820N69D2	27315	158	51
820N70D1	27315	158	8
820N70D2	27315	158	13
820N71D1	27315	158	
820N71D2	27315	158	21
820N72D1	27315	158	55
820N72D1	27315	177	13
820N72D2	27315	158	56
820N73	27315	160	33
820N74D1	27315	158	72
820N74D2	27315	158	73
820N77	27315	149	11
820N78	27315	152	58
820N79	27315	168	17
820P393	27315	163	10
820P394D1	27315	195	4
820P394D2	27315	191	6
820P394D2	27315	191	22
820P394D2	27315	191	27
820P394D3	27315	178	73
820P394D4	27315	27	6
820P394D4	27315	195	9
820P394D5	27315	178	36
820P395	27315	191	34
820P406	27315	136	
820P407	27315	136	
820P408	27315	145	
820P409D1	27315	174	59
820P409D2	27315	174	60
820P409D3	27315	158	64
820P409D4	27315	158	65
820P410	27315	174	41
820P411	27315	174	42
820P412	27315	145	
820P413	27315	145	
820P417	27315	149	13
820P418	27315	152	56
820P419	27315	147	34
820P420	27315	147	42
820P421	27315	145	
820P422D1	27315	178	53
820P423	27315	178	4
820P424	27315	152	39
820P425	27315	149	33
820P428	27315	136	
820P430	27315	149	14
820P432	27315	147	47
820P433	27315	182	122
820P435	27315	182	30
820P435	27315	182	47
820P436	27315	182	63
820P437	27315	147	56
820P44	27315	182	60
820P440	27315	147	72
820P441	27315	177	40
820P442	27315	163	26
820P443	27315	182	9
820P446	27315	160	45
820P447D1	27315	147	27
820P448D1	27315	168	24
820P449D1	27315	182	13
820P451	27315	182	92
820P452	27315	182	79
820P453D1	27315	171	14
820P453D2	27315	171	13
820P454	27315	171	6
820P455	27315	160	4
820P455	27315	182	109
820P456	27315	147	28
820P456	27315	152	21
820P457D1	27315	147	24
820P457D2	27315	147	25
820P458	27315	177	37
820P459	27315	177	36
820P460	27315	171	17

PART NUMBER	FSCM	FIG. NO.	ITEM NO.
820P461	27315	182	1
820P462	27315	182	6
820P464	27315	174	14
820P465	27315	136	
820P466	27315	149	44
820P467	27315	174	66
820P468	27315	152	54
820P469	27315	152	25
820P470	27315	168	16
820P471	27315	152	61
820P472	27315	152	44
820P473	27315	140	
820P474	27315	140	
820P475	27315	160	35
820P476D2	27315	182	112
820P476D3	27315	182	34
820P476D4	27315	182	50
820P476D5	27315	182	82
820P478	27315	177	5
820P479	27315	182	132
820P480D1	27315	145	
820P480D2	27315	136	
820P481	27315	163	22
820P482	27315	158	16
820P483D1	27315	182	125
820P483D2	27315	182	66
820P484D2	27315	158	18
820P484D3	27315	158	58
820P484D4	27315	158	59
820P485D1	27315	152	20
820P485D2	27315	152	34
820P486	27315	145	
820P487	27315	149	30
820P488	27315	152	33
820P488D2	27315	168	23
820P489	27315	152	28
820P490	27315	152	46
820P491	27315	149	20
820P492D1	27315	160	18
820P492D2	27315	160	10
820P492D3	27315	160	13
820P493	27315	160	28
820P494D1	27315	158	60
820P494D2	27315	158	61
820P495	27315	152	50
820P496	27315	136	
820P499	27315	140	
820P502	27315	147	76
820P503D2	27315	163	32
820P504	27315	178	47
820P507	27315	149	52
820T543	27315	145	11
820T544	27315	268	129
820T545	27315	145	12
820T546	27315	268	36
820T547	27315	267	57
820T548D2	27315	27	7
820T548D2	27315	195	8
820T550	27315	191	42
820T555-D2	27315	254	65
820T555D1	27315	254	64
820T59	27315	89	13
820W33	27315	147	
827N594	27315	120	3
827N604	27315	268	50
827N606	27315	186	10
827N606	27315	193	19
827N630F1	27315	273	63
82799	60703	131	9
829N265D1	27315	193	22
829N265D2	27315	193	23
829N266	27315	124	
829N268	27315	124	8
8327194	19207	58	19
8338560	77060	15	6
8338565	19207	15	5
8338565	19207	271	5
8378661	19207	116	9
83902	62983	181	4
840P1	27315	132	61

best copy available

PART NUMBER	FSCM	FIG. NO.	ITEM NO.
841FS06	30327	163	36
841FS12	30327	171	1
841FS12	30327	174	37
844FS06	30327	163	13
844FS12	30327	160	17
844FS12	30327	160	19
844FS12	30327	160	46
845FS008X08	30327	160	
849FS006X06	30327	163	33
849FS008X08	30327	120	6
849FS008X08	30327	121	3
849FS008X08	30327	122	3
849FS008X08	30327	171	34
849FS008X08	30327	174	13
849FS012X10	30327	160	1
849FS012X12	30327	178	67
85-22	27182	276	25
854FS012X12	30327	174	50
855BHFS08	30327	177	39
86324-1	60703	131	12
86688096	00000	278	4
8694464	73331	114	3
8711121	19207	269	18
8712418	19207	269	
8712419	19207	269	3
8719876-1	19207	269	4
8719877	19207	269	8
8719879	19207	269	15
8719880	19207	269	11
8719882	19207	269	7
8720660	19207	269	14
8724199	19207	111	165
8724229	19207	111	11
8724231	19207	13	39
8724258	19207	111	46
8741437	19207	115	1
8741441	19207	115	11
8741442	19207	115	4
8741443	19207	115	14
8741446	19207	115	2
8741447	00000	115	
8741461	00000	115	13
8741462	19207	115	
8741491	19207	115	5
8741492	19207	115	3
8741495	00000	115	7
87415-77ZT	60703	131	5
8741644	19207	114	
87591-16R	60703	131	6
87591-16R	60703	131	8
87591-16R	60703	131	20
87591-16R	60703	131	24
882361	27315	12	
88164M2	80252	268	7
883FS06X04	30327	163	35
883FS08X06	30327	160	5
883FS08X06	30327	160	31
883FS08X06	30327	163	2
883FS12X08	30327	160	22
883FS12X08	30327	174	38
885BHFS08	30327	174	16
885803S1648C	43334	63	8
899856	24617	13	17
9J28	03504	260	103
90-2188	19728	219	20
900-22	72765	38	3
90569	72582	63	7
906N34-1	27315	17	
906N34-1	27315	21	
906N34-1	27315	21	
906N34-2	27315	17	
906N34-2	27315	19	
908P39F40	27315	9	
908140	72582	65	8
909220-25	92863	188	2
915P183F3	27315	97	
919670	62983	173	
920131	09367	127	39
920131	09367	128	18
9241663	72582	31	8
924984	73331	114	2
927J139F1	27315	20	
927J140	27315	17	
927J142	27315	18	
93-100J4314	27315	28	10
94-4745-16	00624	184	14
94-4790-20-16	00624	184	13
94-4790-20-16	00624	184	5
94015	62983	181	7
9409028	72582	71	1
9409028	72582	71	4
9409079	72582	63	14
94099	62983	181	2
9411423	73331	13	18
9412305	16764	42	27
9414418	16764	42	3
9421427	24617	42	5
9427882	16764	42	10
9490V004	27315	186	15
95666-24	50988	165	
958	96509	1	11
96-24	46522	157	24
9646	19220	35	
9646-50	19220	35	6
96463	19220	35	7
96666-24	50988	165	8
98666	50988	165	9
98702	62983	172	1

STOCK NO.	FIGURE NO.	ITEM NO.
6140-00-057-2554	35	16
6140-00-057-2554	112	11
5305-00-068-0500	14	1
5305-00-068-0500	16	3
5305-00-068-0500	16	8
5305-00-068-0500	17	14
5305-00-068-0500	254	53
5305-00-068-0502	12	29
6240-00-155-7807	13	8
5365-00-197-9327	243	16
5306-00-225-8479	147	49
2530-00-254-5949	147	39
2590-00-248-3286	111	10
4730-00-277-5736	145	6
5310-00-407-9566	147	50
4820-00-458-8069	180	
4820-00-458-8070	161	3
4820-00-459-8295	163	18
4720-00-469-4920	178	31
4720-00-469-4921	178	33
4720-00-469-6597	178	23
4720-00-485-7167	32	17
4730-00-841-0561	147	29
5330-00-864-5422	224	24
5310-00-891-7059	258	63
9905-00-935-3863	136	39
5305-00-939-9204	9	44
5325-01-030-7565	38	27
5310-01-035-0838	12	15

PART NUMBER	FSCM	FIG. NO.	ITEM NO.
A3361	61208	40	49
B1088	71126	268	43
C7924X6	79470	163	19
F423	60703	131	25
G1235	79497	38	27
G148595	77640	125	6
MIL-H-52544A	96906	178	37
MS15570-303R	96906	13	8
MS16625-1100	96906	252	21
MS21333-7	96906	178	45
MS24665-353	96906	85	12
MS24665-623	96906	101	13
MS27183-17	96906	85	11
MS28778-8	96906	163	5
MS28778-8	96906	174	28
MS35000-3	96906	35	16
MS35000-3	96906	112	11
MS35204-263	96906	111	95
MS35206-263		19	44
MS35206-263	96906	35	4
MS35206-263	96906	38	25
MS35206-263	96906	111	25
MS35206-263	96906	158	6
MS35206-263	96906	158	49
MS35206-263	96906	174	32
MS35206-263	96906	177	41
MS35206-263	96906	178	48
MS35206-263	96906	180	3
MS35206-263	96906	268	87
MS35206-263	96906	268	92
MS35206-263	96906	268	97
MS35206-263	96906	268	104
MS35206-264		24	6
MS35206-264	96906	37	27
MS35206-264	96906	38	1
MS35206-264	96906	38	20
MS35206-264	96906	88	29
MS35338-45	96906	147	50
MS35338-46		19	2
MS35338-46		20	24
MS35338-46	96906	221	21
MS35338-50	96906	42	2
MS35340-39	96906	113	21
MS35649-202	96906	113	22
MS35691-82	96906	126	25
MS39020-28	96906	136	39
MS39305-24	96906	178	33
MS39305-32	96906	178	40
MS39305-48	96906	178	31
MS39324-16	96906	174	10
MS51967-8	96906	19	4
MS51968-2	96906	97	31
MS51968-2	96906	118	15
MS90725-3	96906	14	1
MS90725-3	96906	16	3
MS90725-3	96906	16	8
MS90725-3	96906	17	14
MS90725-3		23	31
MS90725-3		26	23
MS90725-3	96906	111	36
MS90725-3	96906	111	92
MS90725-3	96906	113	12
MS90725-3	96906	113	15
MS90725-3	96906	171	24
MS90725-3	96906	178	54
MS90725-3	96906	193	8
MS90725-3	96906	193	17
MS90725-3	96906	195	12
MS90725-3	96906	195	18
MS90725-3	96906	254	53
MS90725-3	96906	268	29
MS90725-6	96906	12	29
MS90725-6	96906	18	24
MS90725-6	96906	111	83
MS90725-6	96906	111	186
MS90725-32	96906	147	49
MS90725-40		19	1
MS90725-60		21	18
MS90725-109	96906	156	14
MS90725-187	96906	9	44

PART NUMBER	FSCM	FIG. NO.	ITEM NO.
MS90726-3		19	53
MS90726-3	96906	272	1
MS90726-6	96906	163	51
NT721018	01843	12	15
RS80325MSC		19	3
S104	15434	221	10
S181B	15434	229	5
S602	15434	229	7
S604	15434	229	10
S964	15434	229	20
S995	15434	221	15
Z158-5	30226	272	15
7N213-1	27315	2	4
10H25	12603	258	63
17Q13	27315	267	35
18P33D48	27315	85	20
18T8653D2		21	25
19T5483	27315	8	17
20U22	27315	178	25
27Z672		19	27
27Z40501		18	17
32Q433D11	27315	273	36
42X4	79470	156	38
42X6	79470	156	40
42X6	79470	156	44
44Q47-D6	88044	182	94
44Q217D5	27315	163	21
44Q224D12	27315	177	2
44Q266D1	27315	163	41
44Q273D2	27315	178	11
44Q28606	27315	171	28
1-44Q221D1	27315	152	2
1-44Q235D4	27315	156	7
44Z375D52		22	8
49X6X2	79470	192	13
49X6X6	79470	147	43
79Q314	27315	111	80
79U563-D8	27315	111	211
103B1-4	30327	145	6
105X5	79470	82	6
200X5	79470	82	19
819T183	27315	124	5
820N26	27315	156	11
820N55	27315	132	55
820P438	27315	147	44
1-820N27	27315	156	48
1-820N63D5	27315	156	46
1-820N64D4	27315	156	51
1-820P64D5	27315	156	45
1-820P406	27315	156	43
1-820P416	27315	147	78
1-820P426	27315	147	61
1-820P427	27315	147	62
1-820P439	27315	147	67
1-820P476D1	27315	182	95
883FS12X08	30327	171	2
2003-8-8B	01276	147	29
13208E6462	97403	267	18
13213E9207	97403	111	10
13213E9442	97403	180	
13213E9761	97403	161	3
13213E9766-9	97403	178	23
13216E8031	97403	163	18
320441D16	27315	254	29
12-1-2	70281	276	54
30-589	70281	276	51
158-14	30226	272	16
7011-04	06853	147	39
34	71177	85	23
67946	15434	243	16
103321	72582	58	3
103341	72582	58	2
103341	72582	65	4
186628	72582	58	1
186780	15434	224	24
187437	15434	224	36
200346	15434	252	2
234845	06853	134	3
518258	33525	15	20
5145011	72582	47	9

SECTION

PART NUMBER	FSCM	FIG. NO.	ITEM NO.
5199575		32	17
8741443	19207	115	12

By Order of the Secretary of the Army:

BERNARD W. ROGERS
General, United States Army
Chief of Staff

Official:

J. C. PENNINGTON
Brigadier General, United States Army
The Adjutant General

Distribution:

To be distributed in accordance with DA Form 12-25B, organizational maintenance requirements for Crane-Shovel, Wheel, or Truck Mounted 20-Ton.

☆U.S. GOVERNMENT PRINTING OFFICE: 1990 - 261-872/21328

RECOMMENDED CHANGES TO EQUIPMENT TECHNICAL MANUALS

SOMETHING WRONG WITH THIS MANUAL?

FROM: (YOUR UNIT'S COMPLETE ADDRESS)

DATE

PUBLICATION NUMBER	DATE	
TM 5-3810-295-20P		

BE EXACT. . .PIN-POINT WHERE IT IS

PAGE NO.	PARAGRAPH	FIGURE NO.	TABLE NO.	IN THIS SPACE TELL WHAT IS WRONG AND WHAT SHOULD BE DONE ABOUT IT:

TYPED NAME, GRADE OR TITLE, AND TELEPHONE NUMBER	SIGN HERE

CUT ALONG DOTTED LINE

DA FORM 1 AUG 74 2028-2

P.S.--IF YOUR OUTFIT WANTS TO KNOW ABOUT YOUR MANUAL "FIND," MAKE A CARBON COPY OF THIS AND GIVE IT TO YOUR HEADQUARTERS.

FILL IN YOUR UNIT'S ADDRESS

FOLD BACK

DEPARTMENT OF THE ARMY

____

____

OFFICIAL BUSINESS

Commander
US Army Tank-Automotive Materiel
Readiness Command
ATTN: DRSTA-MBA
Warren, MI 48090

CUT ALONG DOTTED LINE

FOLD BACK

RECOMMENDED CHANGES TO EQUIPMENT TECHNICAL MANUALS

SOMETHING WRONG WITH THIS MANUAL?

THEN... JOT DOWN THE DOPE ABOUT IT ON THIS FORM, CUT IT OUT, FOLD IT AND DROP IT IN THE MAIL!

FROM: (YOUR UNIT'S COMPLETE ADDRESS)

DATE

PUBLICATION NUMBER	DATE	
TM 5-3810-295-20P		

BE EXACT. . . PIN-POINT WHERE IT IS

PAGE NO.	PARA-GRAPH	FIGURE NO.	TABLE NO.	IN THIS SPACE TELL WHAT IS WRONG AND WHAT SHOULD BE DONE ABOUT IT:

TYPED NAME, GRADE OR TITLE, AND TELEPHONE NUMBER	SIGN HERE

CUT ALONG DOTTED LINE

DA FORM 1 AUG 74 2028-2

P.S.--IF YOUR OUTFIT WANTS TO KNOW ABOUT YOUR MANUAL "FIND," MAKE A CARBON COPY OF THIS AND GIVE IT TO YOUR HEADQUARTERS.

FILL IN YOUR UNIT'S ADDRESS

FOLD BACK

DEPARTMENT OF THE ARMY

OFFICIAL BUSINESS

Commander
US Army Tank-Automotive Materiel
Readiness Command
ATTN: DRSTA-MBA
Warren, MI 48090

CUT ALONG DOTTED LINE

FOLD BACK

RECOMMENDED CHANGES TO EQUIPMENT TECHNICAL MANUALS

SOMETHING WRONG WITH THIS MANUAL?

FROM: (YOUR UNIT'S COMPLETE ADDRESS)

DATE

PUBLICATION NUMBER	DATE	
TM 5-3810-295-20P		

BE EXACT. . .PIN-POINT WHERE IT IS

PAGE NO.	PARA-GRAPH	FIGURE NO.	TABLE NO.	IN THIS SPACE TELL WHAT IS WRONG AND WHAT SHOULD BE DONE ABOUT IT:

TYPED NAME, GRADE OR TITLE, AND TELEPHONE NUMBER	SIGN HERE

CUT ALONG DOTTED LINE

DA FORM 1 AUG 74 2028-2

P.S.--IF YOUR OUTFIT WANTS TO KNOW ABOUT YOUR MANUAL "FIND," MAKE A CARBON COPY OF THIS AND GIVE IT TO YOUR HEADQUARTERS.

FILL IN YOUR UNIT'S ADDRESS

FOLD BACK

DEPARTMENT OF THE ARMY

OFFICIAL BUSINESS

Commander
US Army Tank-Automotive Materiel
Readiness Command
ATTN: DRSTA-MBA
Warren, MI 48090

CUT ALONG DOTTED LINE

FOLD BACK

PIN : 035249-000